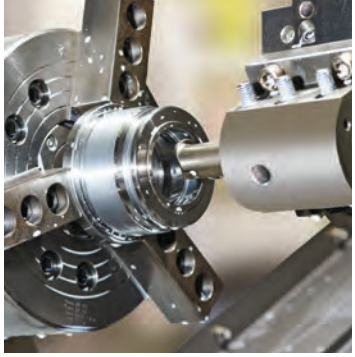

# Heavy Duty Hydraulic Cylinders

Series 2H / 2HD / 2HB & 3H / 3HD / 3HB

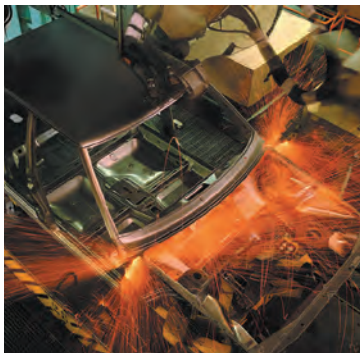

Parker

ENGINEERING YOUR SUCCESS.

View Table of Contents

Parker Hannifin's Cylinder Division offers products that are designed to meet and exceed the most demanding application requirements. Our extensive hydraulic cylinder product line offers OEM's and End Users cylinder solutions that provide value through reduced maintenance, increased productivity, and long service life. Parker Cylinder's wide breadth of product encompasses NFPA, ISO, and Custom designed products in a multitude of configurations and sizes.

**Series CHE**
- 20 through 100mm Bore Sizes
- Stroke Lengths to 150mm
- Operating Pressure to 140 bar
- 4 Different Rod Ends Available

**Series CHD**
- 20 through 80mm Bore Sizes
- Stroke Lengths to 100mm
- Operating Pressure to 207 bar
- 4 Different Rod Ends Available

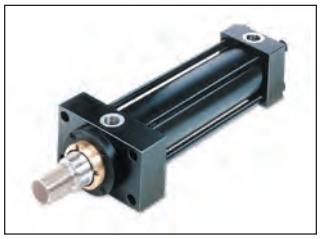

**Series HMI**
- Bore Sizes 25 through 200mm
- ISO 6020/2 Interchangeable
- 12 Standard Mounting Styles
- 210 Bar Hydraulic Service

**Series VH**
- 2.50" through 8.00" Bore Sizes
- 13 Standard Mounting Styles
- Larger Ports Than Standard
- 3,000 psi Hydraulic Service

**Series 3L**
- Bore Sizes 1.00" through 8.00"
- Removable Rod Gland
- 15 Standard Mounting Styles
- 1,000 psi Nominal Hydraulic Service

**WaveScale**
- Bore Sizes 2.00" through 8.00"
- LDT Feedback
- Integrated Manifolds Available
- Protective Covers Available

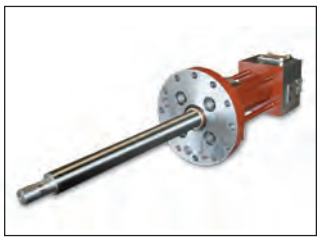

**Custom Cylinder**
- Bore Sizes to 42.00"
- Stroke Lengths to 70'
- Operating Pressure to 10,000 psi
- Third Party Agency Approval

**Cylinder Accessories**
- Traditional Cylinder Attachments
- Alignment Aids
- Stainless Steel Attachments

In line with our policy of continuing product improvement, specifications and information contained in this catalog are subject to change.

Copyright ©2017 by Parker Hannifin Corporation. All rights reserved.

PRINTED IN THE U.S.A.

## ⚠ WARNING

**FAILURE OR IMPROPER SELECTION OR IMPROPER USE OF THE PRODUCTS AND/OR SYSTEMS DESCRIBED HEREIN OR RELATED ITEMS CAN CAUSE DEATH, PERSONAL INJURY AND PROPERTY DAMAGE.**

This document and other information from the Parker Hannifin Corporation, its subsidiaries and authorized distributors provide product and/or system options for further investigation by users having expertise. It is important that you analyze all aspects of your application, including consequences of any failure and review the information concerning the product or system in the current product catalog. Due to the variety of operating conditions and applications for these products or systems, the user, through its own analysis and testing, is solely responsible for making the final selection of the products and systems and assuring that all performance, safety and warning requirements of the application are met.

The products described herein, including without limitation, product features, specifications, designs, availability and pricing, are subject to change by Parker Hannifin Corporation and its subsidiaries at any time without notice.

## Offer of Sale

The items described in this document are hereby offered for sale by Parker Hannifin Corporation, its subsidiaries or its authorized distributors. This offer and its acceptance are governed by provisions stated on a separate page of the document entitled 'Offer of Sale'.



**Parker Hannifin Corporation**
Cylinder Division
Des Plaines, Illinois USA

# Table of Contents


## Newest Design Features of the 2H / 3H Cylinder — pages IV-VIII

## Overview — Series 2H / 2HD / 2HB & 3H / 3HD / 3HB — pages 1-7

A Overview

Features and Benefits . . . . . 2-3
Application Check List . . . . . 4
Mounting Styles & Tips for Applying Them . . . . . 5
2H & 3H Family Model Code / How To Order. . . . . 6-7

## Series 2H 1.50" - 6.00" Bore / 3H 7.00" & 8.00" Bore — pages 9-47

B Series 2H Series 3H

2H and 3H Performance . . . . . 10
2H Specifications, Mounting Styles . . . . . 11
2H Rod End Styles and Dimensions. . . . . 12-13
2H Mount Dimensions . . . . . 14-30
3H Specifications, Mounting Styles . . . . . 32
3H Rod End Styles and Dimensions. . . . . 33
3H Mount Dimensions . . . . . 34-47

## Series 2HD 1.50" - 6.00" Bore / 3HD 7.00" & 8.00" Bore — pages 49-85

C Series 2HD Series 3HD

2HD and 3HD Performance . . . . . 50
2HD and 3HD Specifications, Mounting Styles . . . . . 51
2HD Rod End Styles and Dimensions . . . . . 52-53
2HD Mount Dimensions. . . . . 54-70
3HD Rod End Styles and Dimensions . . . . . 71
3HD Mount Dimensions. . . . . 72-85

## Series 2HB 1.50" - 6.00" Bore / 3HB 7.00" & 8.00" Bore — pages 87-112

D Series 2HB / Series 3HB

2HB and 3HB Performance. . . . . 88
2HB and 3HB Specifications, Mounting Styles . . . . . 89
2HB Rod End Styles and Dimensions . . . . . 90-91
2HB Mount Dimensions. . . . . 92-102
3HB Rod End Styles and Dimensions . . . . . 103
3HB Mount Dimensions. . . . . 104-111
3HB 8" Bore Threaded Flange / Suggested Machining for Mounting Style C . . . . . 112

## Series 3H Large Bore, 10.00" - 20.00" Bore — pages 113-130

E Series 3H Large Bore

3H Large Bore Performance . . . . . 114
3H Large Bore Construction . . . . . 115
3H Large Bore Specifications, Mounting Styles. . . . . 116
3H Large Bore Rod End Styles and Dimensions. . . . . 117
3H Large Bore Model Number . . . . . 118-119
3H Large Bore Mount Dimensions . . . . . 120-130

## Cylinder Accessories and Replacement Parts — pages 131-148

F Accessories / Parts

Mounting Accessories . . . . . 132-135
Style SB & SE Spherical Bearing Mounting Accessories . . 136-137
Linear Alignment Coupler, Split Coupler and Weld Plates. . 138-139
2H / 2HD / 2HB Parts Identification, Torque, Rod Gland, Rod Seal, Piston Seal and Body Seal Kits . . . . . 140-143
3H / 3HD / 3HB Parts Identification, Torque, Rod Gland, Rod Seal, Piston Seal and Body Seal Kits . . . . . 144-145
Series 3H Large Bore Parts Identification, Tie Rod Torque, Rod Bearing, Rod Seal, Piston Seal and Body Seal Kits . 146-147
Gland and Spanner Wrenches . . . . . 148

## Custom Modifications — pages 149-162

G Custom Modifications

Magnetic Piston, Magnetic Switch Choices . . . . . 150-151
End-of-Stroke Proximity Switches. . . . . 152-155
Water Submersible Option and How to Order . . . . . 156-157
Buffer Seal Gland, Rod End Styles and Gland Seal Kits. . . 158-159
Metallic Rod Scraper, Crown Wiper, Rod End Boots, Gland Drain and Air Bleeds. . . . . 160
Tie Rod Supports, Stroke Adjusters, Thrust Key Mountings, and Metric Piston Rod Thread. . . . . 161
Global Shield™ Rod Coating . . . . . 162

## Engineering Data — pages 163-188

H Engineering Data

Theoretical Push & Pull Forces, Cylinder Weights. . . . . 164-167
Operating Fluids and Seals / Temperature Range. . . . . 168
Fluids and Temperature Range / Pressure Ratings. . . . . 169
Piston & Gland Friction / Piston Orifice. . . . . 170-171
Ports, Stroke Data, Mounting Groups and Stop Tubing. . . . 172-175
Piston Rod Selection Data. . . . . 176-178
Cushioning . . . . . 179-184
Cylinder Safety Guide . . . . . 186-187
Offer of Sale . . . . . 188

View Table of Contents

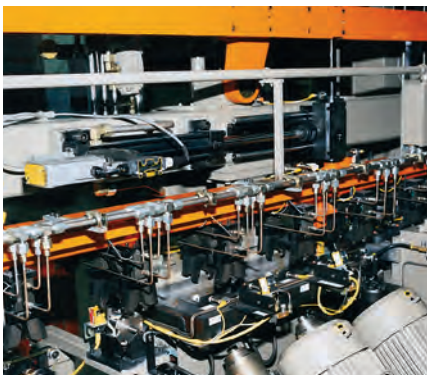

Parker Hannifin is a Fortune 250 global leader in motion and control technologies. For 100 years the company has engineered the success of its customers in a wide range of diversified industrial and aerospace markets. Learn more at www.parker.com or @parkerhannifin.

## Parker is Engineering

Fluid Power and application expertise provide customers the opportunity to use us as an extension of their design teams. From new system design to improvements required for existing applications, Parker offers unparalleled engineering expertise. We'll help you develop cost saving, high performance solutions that provide value through increased productivity, improved machine efficiency, and reduced downtime.

Our design engineers utilize the highest quality materials and cutting edge manufacturing processes available to push the envelope for performance, value and reliability.

Parker components and systems are made to last. We offer complete system solutions for the following industries:

- Plastics
- Metal Forming
- Steel
- Press
- Off Shore Oil
- Forestry
- Mining
- Entertainment
- Flight Simulation
- Fatigue Testing
- Automation

## Worldwide Supplier to Industrial Markets

Parker Hannifin is the world's leading supplier of motion and control technologies that include; motion control products, systems, and complete engineered solutions for industrial markets. Parker's broad and extensive breadth of product offer single source capability with limitless possibilities. Our industrial product solutions range from state of the art stand-alone components to complete engineered systems that are designed to provide value and efficiency to all of our customers. Each component and system is backed up with superior application expertise and technical support that you would expect from Parker Hannifin.

# Manufacturing Locations

***Corona, California***

221 Helicopter Circle • Corona, CA 92880 • Tel.: (951) 280-3800
Fax: (951) 280-3808 • Fax: (800) 869-9886

***Goodland, Indiana***

715 South Iroquois Street • Goodland, IN 47948
Tel.: (219) 297-3182 • Fax: (800) 328-8120

***Atlanta, Georgia***

1300 Six Flags Road • Lithia Springs, GA 30122
Tel.: (770) 819-3400 • Fax: (800) 437-3498

***Eugene, Oregon***

29289 Airport Road • Eugene, OR 97402-0079
Tel.: (541) 689-9111 • Fax: (541) 688-6771 • Fax: (800) 624-7996

***Plymouth, Michigan***

900 Plymouth Road • Plymouth, MI 48170
Tel.: (734) 455-1700 • Fax: (734) 455-1007

# *Series 2H / 3H Design Improvements Increase Reliability*

Class 1 service polyurethane rod wiperseal and o-rings as body end seals and rod gland static seal offer superior abrasion and extrusion resistance for longer service life.

High compressive strength non-metallic piston wear rings, that minimize tube scoring, are standard on all configured piston selections.

Cap cushion performance options are selectable as floating check bushing type for normal applications or solid orifice style for more demanding high speed and load operation.

Cartridge style needle valve with captive micro adjust screw for precision cushion tuning.

Washers under each tie rod nut prevent galling, ensuring correct tie rod pre-stress and pressure envelope integrity.

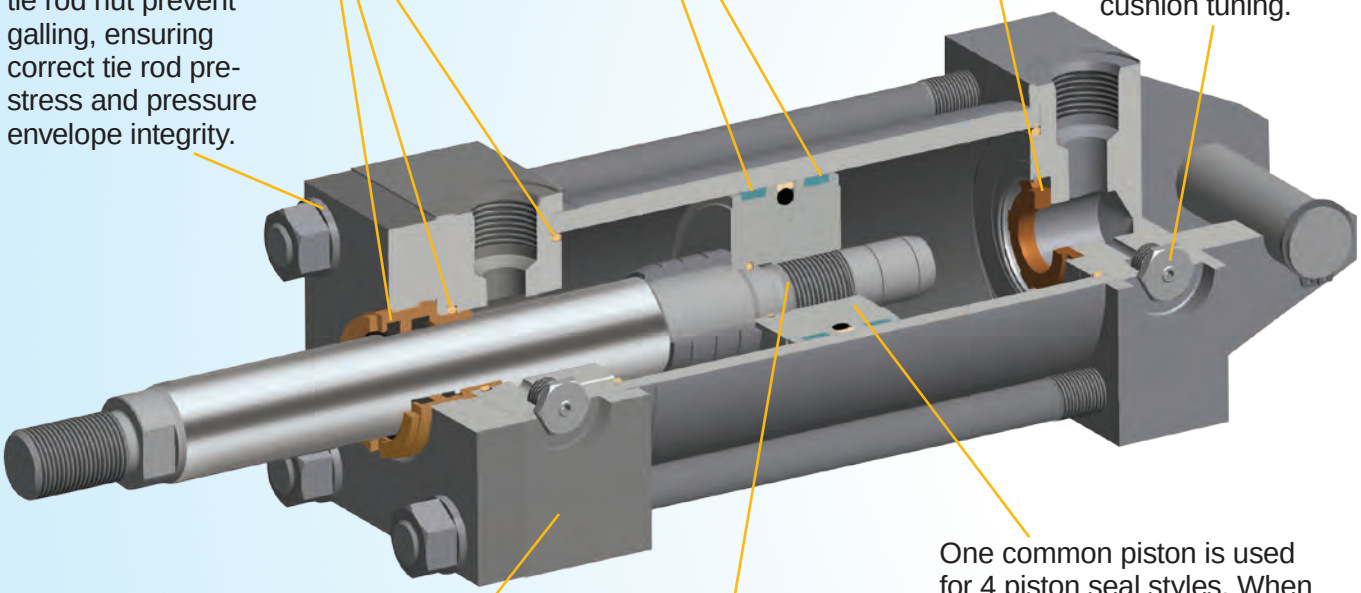

One common piston is used for 4 piston seal styles. When changing operating conditions require a different seal style, the piston and rod assembly is unchanged.

Steel head and cap blocks are precision size, finished on all sides and are bored and grooved for concentric alignment of mating parts.

Piston-to-rod connection is pre-stressed to maximize fatigue life. An o-ring on the piston ID ensures a leak free joint and anaerobic adhesive further secures the threaded connection.

# *One Common Platform – Three Construction Choices*

## Configurable Gland, Tie Rod & Non-Tie Rod Styles are all available when you need them.

### *Series 2H & 3H Tie Rod Style with Threaded Jewel Gland*

Traditional Parker threaded Jewel gland construction with proven TS2000 rod sealing system. Industrial cylinder standard tie rod construction ensures head and cap remain in contact with tube ends to ensure leak free performance.

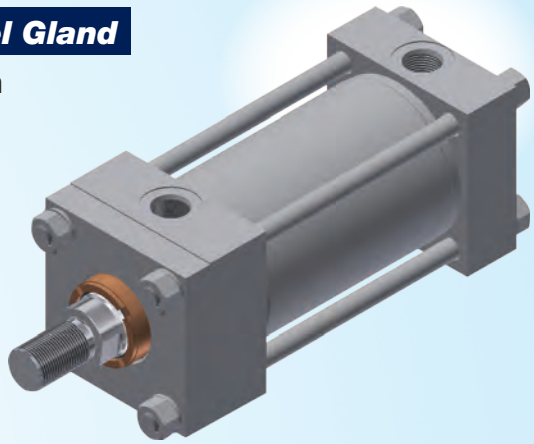

**Advantages**

- ✓ Rod gland serviceable, using gland and spanner wrenches, without disturbing tie rod torque
- ✓ High strength tie rod material with rolled thread for added strength

### *Series 2HD & 3HD Tie Rod Style with Bolt-On Gland*

Bolt-on gland (see Gland Retention page for bore and mounting availability) with robust Tri-Lip rod sealing system. Industrial cylinder standard tie rod construction ensures head and cap remain in contact with tube ends to ensure leak free performance.

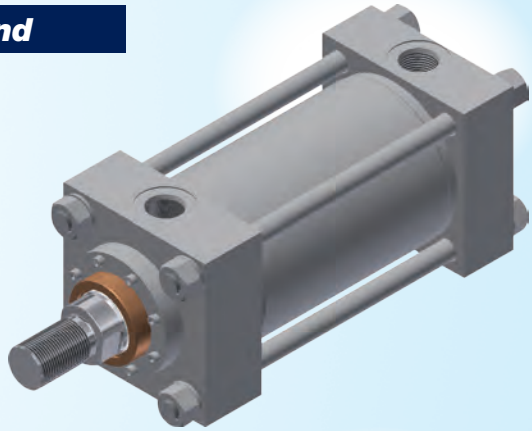

**Advantages**

- ✓ Rod gland serviceable, using a common hex wrench, without disturbing tie rod torque
- ✓ High strength tie rod material with rolled thread for added strength

### *Series 2HB & 3HB Non-Tie Rod Style with Bolt-On Gland*

Non-tie rod style with bolt-on gland (see Gland Retention page for bore and mounting availability) and robust Tri-Lip rod sealing system. Head and cap are bolted to threaded body flanges.

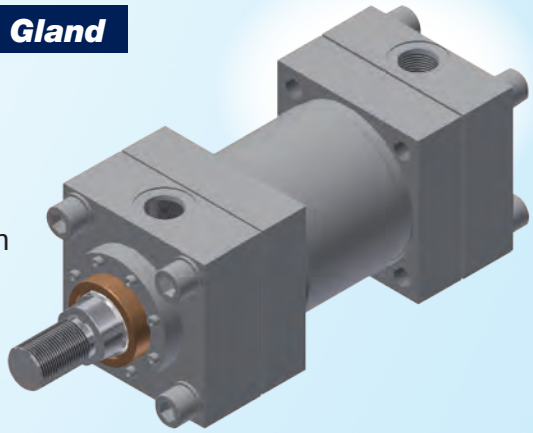

**Advantages**

- ✓ Improved fatigue life compared to welded flange construction
- ✓ Easier to service than tie rod styles in long strokes
- ✓ Clean appearance improves machine aesthetics
- ✓ Lower weight in long strokes

# *Piston Sealing Solutions for the Most Demanding Applications*

## *Piston Seal Technology For The 21st Century*

Parker's new universal piston seal design addresses the performance balance between low pressure sealability, low friction, extrusion resistance and seal life.

One piston style is used for all piston seal and wear ring configurations and will suit all application requirements. A common piston design permits field changing of seal configuration or seal and wear band material without replacing costly machined components when variations in application parameters occur, such as fluid, temperature or duty cycle.

All piston options include dual non-metallic wear rings to provide maximum stability and bearing area for protection against eccentric loads.

Parker WearGard™ wear rings are internally lubricated for reduced friction and formulated for heavy-duty load-bearing applications.

## *Parker HP Polyurethane Piston Seal*

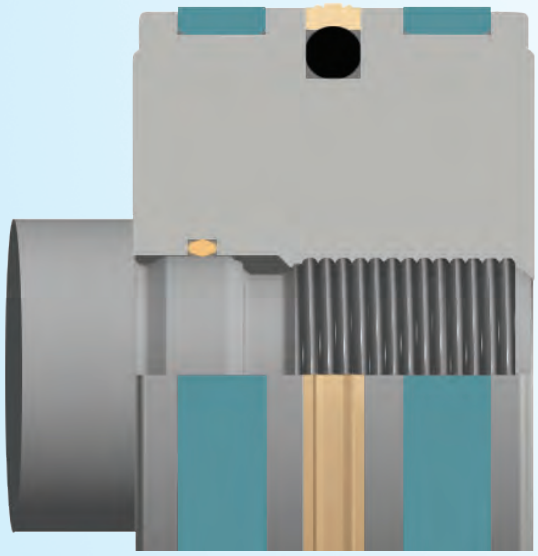

The Parker HP energized bi-directional piston seal improves upon the low friction and long wear of lipseals by including excellent low pressure sealing performance. Specially formulated polyurethane is long wearing and abrasion resistant with running friction comparable to lipseals. An o-ring energizer ensures virtually zero leakage in low pressure applications. Also, pressure trapping that can result with energized lipseals is not possible with a single energized seal.

Parker's HP piston seal is an excellent choice for most industrial applications operating with mineral based hydraulic oil and is available in Seal Classes 1 and 4.

## *Parker KP Filled PTFE Piston Seal*

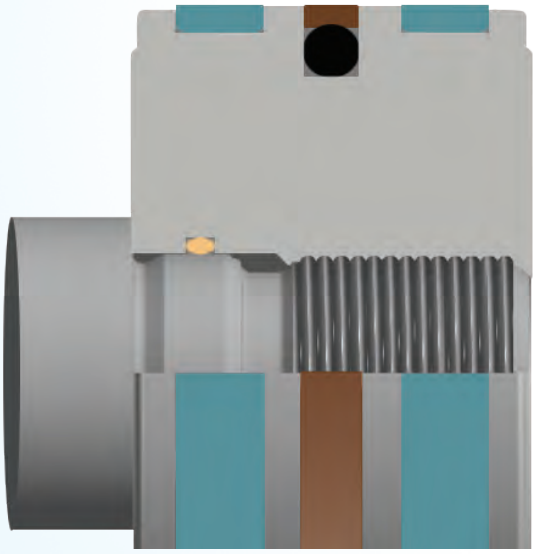

The Parker KP bronze filled PTFE seal ring material has low running friction for accurate positioning in closed loop servo applications.

When combined with a fluorocarbon energizing ring the Parker KP seal is rated for 400° F and will increase service intervals in high temperature applications when compared to fluorocarbon lipseals.

By combining the Parker KP seal with other energizer o-ring compounds and wear ring materials, the KP seal offers excellent service in all Seal Class environments.

## *Selection Guide*

| Application Demand | HP Seal | KP Seal | RP Seal | WP Seal |
|---|---|---|---|---|
| **Load Holding** | Best | Good | Good | Best |
| **Fluid Compatibility** | Good | Best | Better | Better |
| **Heat Resistance** | Good (200° F Max.) | Best (400° F Max.) | Better (300° F Max.) | Better (250° F Max.) |
| **Dynamic Friction** | Best | Best | Good | Better |
| **Breakaway Friction** | Good | Best | Good | Better |
| **Extrusion Resistance** | Good | Better | Best | Good |
| **Fluid Isolation** | N/A | N/A | N/A | Best |

## *Parker RP Thermoplastic Seal*

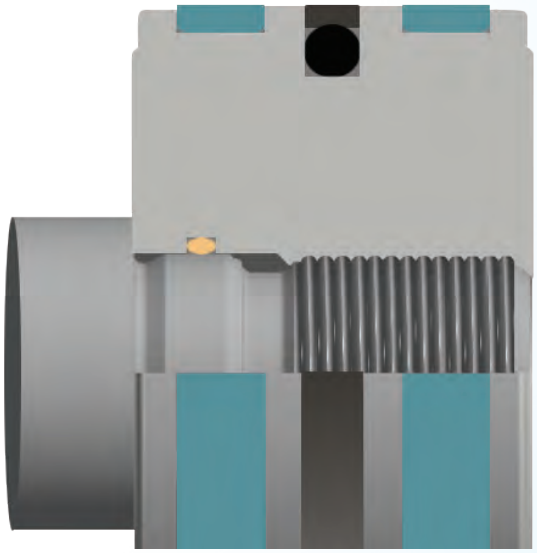

The Parker RP step cut ring is made of self-lubricating, glass reinforced, thermoplastic and is o-ring energized. Unlike cast iron rings that bypass oil, the Parker RP seal provides drift free operation throughout the operating pressure range. This tough seal is fully extrusion resistant, even in the face of extreme pressure spikes, thus ensuring superior wear resistance in the most demanding applications.

Parker RP can operate up to 300° F and is compatible with Seal Classes 1, 2, 3, 4, 5 and 6.

## *Parker WP Mixed Media Seal*

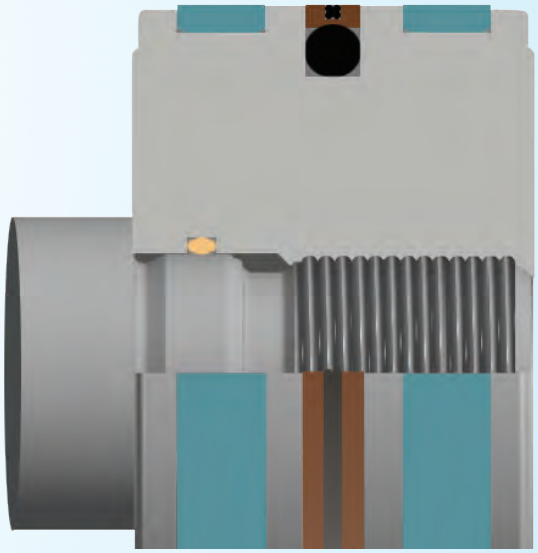

The Parker WP Mixed Media seal is designed for applications requiring different media on either side of the piston. This option is ideal when hydraulic oil is on one side of the piston and air is on the opposite side; and it can be equally effective when dissimilar fluids are on either side of the piston.

Superior low-friction bi-directional sealing is accomplished by combining an energized filled PTFE seal with a redundant elastomer seal. Energizer and redundant elastomer seal materials are available for compatibility with seal classes 1, 2, 3, 5 and 6. Note: WP piston seal groove is not universal in 1.50" bore.

# *Versatile Piston Rod Sealing Systems Deliver Dry Rod Performance*

Parker offers the best performing and broadest selection of rod sealing options. Our TS2000 threaded Jewel Gland sealing system in Series 2H and Tri-lip Bolt-on Gland in Series 2HD / 2HB are proven anchors of the offering.

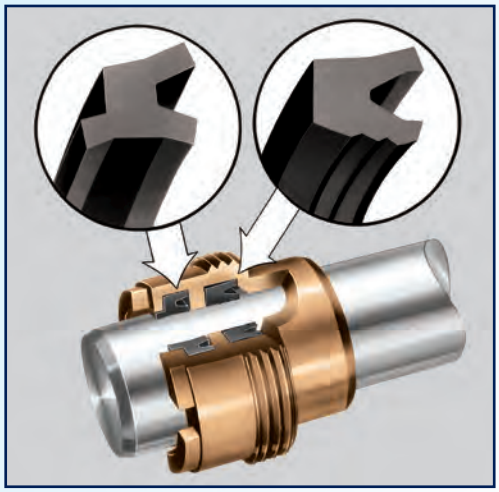

As the rod strokes out, its motion and friction dynamically flex the multi-sealing edges of the TS2000 (shown above) and the Tri-Lip rod seal to maintain their contact with the rod. This provides a cutting action to shear the oil from the rod, allowing the rod to pass out of the rod seal practically dry. Any oil film that remains on the rod is stopped by the inner lip of the Wiperseal and held between it and the rod seal.

On the return stroke any dirt or foreign matter collected on the rod is wiped off by the leading edge, or outer lip of the Wiperseal. At the same time, any oil which may be trapped between the Wiperseal and the rod seal is returned into the cylinder. In other words, we have an automatic check valve that prevents any appreciable amount of oil to leak past the seals, and then returns any oil that has managed to wipe by the rod seal.

Both the TS2000 Jewel Gland and Tri-Lip glands are easily removed for service without loosening tie rods and disturbing the pressure envelope. Material options for both glands allow compatibility with Seal Classes 1, 2, 3, 4, 5 & 6.

## *Buffer Seal Bushing*

The Parker Buffer Seal, installed ahead of the primary rod seal, protects the primary seal from the effects of pressure spikes. The result is increased primary rod seal and wiperseal performance life when in severe applications.

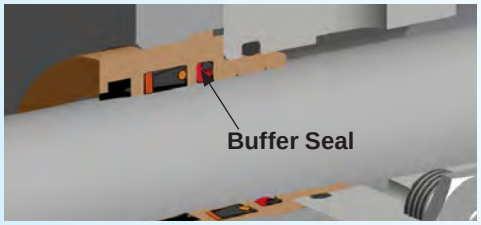


The Parker Buffer Seal is a unique design that allows trapped pressure back into the cylinder. When the rod extends from the cylinder the Buffer Seal is riding on a high compression sealing point to limit leakage. On the retract stroke the seal rocks forward to allow trapped fluid to pass under the seal and return to the system.

Buffer Seals are available with Series 2HD and 2HB Bolt-on gland sealing systems in 1.50” - 8.00” bores. They are available with Seal Classes 1, 2, 3, 4, 5 & 6. Selection of the Buffer Seal is with a code in the cylinder model number.

To accommodate the Buffer Seal, rod bushing length is extended 0.31" to 0.81", depending on rod diameter. See Buffer Seal Bushing page for piston rod extension details.

## *Low Friction Bushing*

The Parker Low Friction Gland is designed to minimize ‘slip-stick’ and ‘chatter’ in servo and ‘dither’ applications. Two unidirectional bronze filled PTFE primary rod seals and a bronze filled PTFE wiperseal minimize both breakaway and running friction.

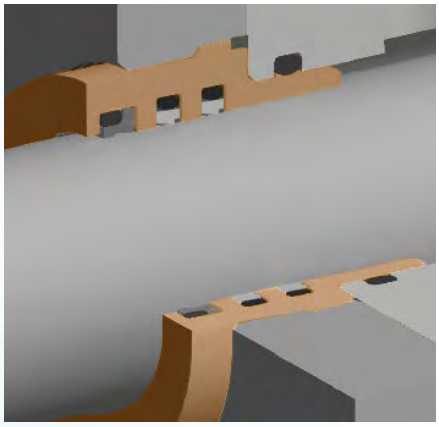

Low Friction Rod Seals are available in both threaded Jewel Gland and Bolt-on gland styles for rod diameters 1.000" - 5.500" in 1.50" - 8.00" bores. They are offered with Seal Classes 1, 2, 3, 4, 5, 6 & 8. Selection of the Low Friction Gland is with a code in the cylinder model number.

See Piston & Bushing Friction page for comparative seal friction data.

View Table of Contents

# Section A

## Series 2H / 2HD / 2HB & 3H / 3HD / 3HB Heavy Duty Hydraulic Cylinders


| | |
|---|---|
| Features and Benefits | 2-3 |
| Application Check List | 4 |
| Mounting Styles & Tips for Applying Them | 5 |
| 2H & 3H Family Model Code / How To Order | 6-7 |






**Parker Hannifin Corporation**
Cylinder Division
Des Plaines, Illinois USA

View Table of Contents

A Overview

# The inside story on why Series 2H is your best choice in heavy duty hydraulic cylinders

**Align-A-Groove –** A 3/16" wide surface machined at each end of the cylinder body. Makes precise mounting quick and easy.

**Ports –** SAE "O" ring ports are standard.

**Optional Ports –** NPTF ports are optional at no extra charge. Oversize NPTF and SAE ports are available at extra charge.

**Primary Seal –** TS2000 Rod Seal is a proven leakproof design – completely self-compensating and self-relieving to withstand variations and conform to mechanical deflection that may occur.

**Secondary Seal –** Double-Service urethane Wiperseal™ wipes clean any oil film adhering to the rod on the extend stroke and cleans the rod on the return stroke.

**Rod Gland Assembly –** Externally removable without cylinder disassembly. Long bearing surface is inboard of the seals, assuring positive lubrication from within the cylinder. An o-ring is used as a seal between gland and head, and also serves as a prevailing torque-type lock.

**Piston Rod Thread** – Male rod end styles #4A and #8A are integral cut threads on the piston rod. Optional studded KK small male thread, for piston rod diameters 2.000" and smaller, is available by specifying rod end style #4H

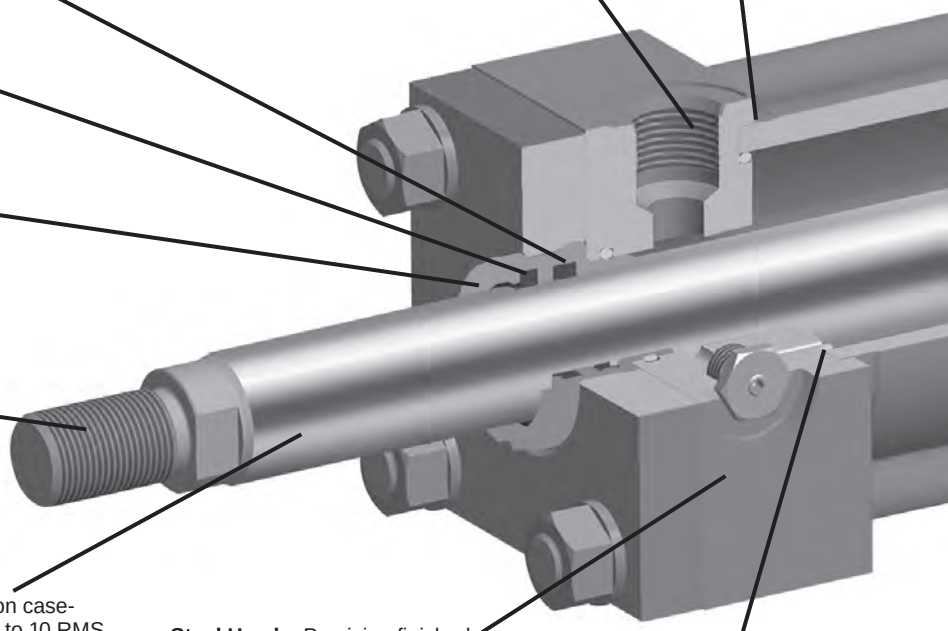

**Piston Rod –** Medium carbon steel, induction case-hardened, hard chrome-plated and polished to 10 RMS finish. Piston rods are made from 85,000 to 100,000 psi minimum yield material in .625" through 4.000" diameters. Larger diameters vary between 57,000 and 90,000 psi minimum material, depending on rod diameter.

**Steel Head –** Precision finished on all sides; bored and grooved to provide concentricity for mating parts.

**End Seals –** Pressure-actuated cylinder body-to-head and cap o-rings.

## Parker's Exclusive Stepped floating cushions combine the best features of known cushion technology.

Deceleration devices or built-in "cushions" are optional and can be supplied at head end, cap end, or both ends without change in envelope or mounting dimensions. Parker cylinder cushions are a stepped design and combine the best features of known cushion technology.

Standard straight or tapered cushions have been used in industrial cylinders over a very broad range of applications. Parker research has found that both designs have their limitations.

As a result, Parker has taken a new approach in cushioning of industrial hydraulic cylinders and for specific load and velocity conditions have been able to obtain deceleration curves that come very close to the ideal. The success lies in a stepped sleeve or spear concept where the steps are calculated to approximate theoretical orifice area curves.

In the cushion performance chart, pressure traces show the results of typical orifice flow conditions. Tests of a three-step sleeve or spear show three pressure pulses coinciding with the steps. The deceleration cushion plunger curves shape comes very close to being theoretical, with the exception of the last 1/2 inch of travel. This is a constant shape in order to have some flexibility in application. The stepped cushion design shows reduced pressure peaks for most load and speed conditions, with comparable reduction of objectionable stopping forces being transmitted to the load and the support structure.

All Parker Hannifin cushions are adjustable.

The Series 2H cylinder design incorporates the longest cushion sleeve and cushion spear that can be provided in the standard envelope without decreasing the rod bearing and piston bearing strengths.

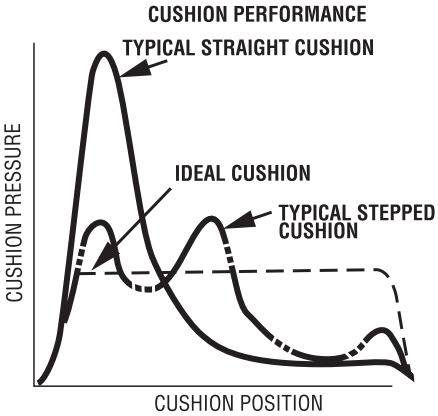

View Table of Contents



**Adjustable Floating Stepped Cushions –** For maximum performance – economical and flexible for even the most demanding applications – provides superior performance in reducing shock. Cushions are optional and can be supplied at head end, cap end, or both ends without change in envelope or mounting dimensions.

**Steel Cap –** Precision finished on all sides; bored and grooved to provide concentricity for mating parts.

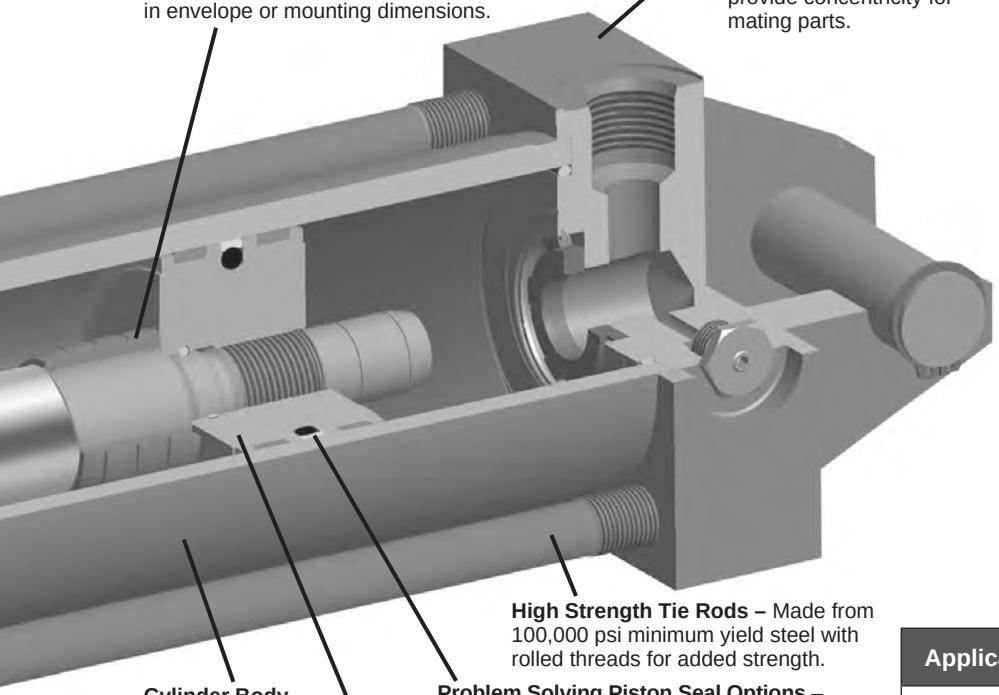

**High Strength Tie Rods –** Made from 100,000 psi minimum yield steel with rolled threads for added strength.

**Cylinder Body –** Heavy-wall steel tubing, honed to a micro finish bore.

**Problem Solving Piston Seal Options** – Parker's new piston seal designs address the performance balance between low pressure seal ability, low friction, extrusion resistance and seal life.

**One-Piece Nodular Iron Piston –** Two non-metallic wear bands that minimize tube scoring are standard with all seal styles. Piston to rod connection is pre-stressed to maximize fatigue life. An o-ring on the piston ID ensures a leak free joint and anaerobic adhesive further secures the threaded connection.

## One Common Piston for 4 Seal Styles

**Standard HP** style with polyurethane piston seal – excellent for most cycling and load holding applications.

**Optional KP** style with filled PTFE piston seal – low friction, high heat resistance for cycling and load holding service.

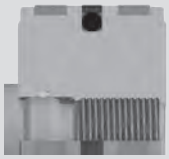

**Optional RP** style with thermoplastic piston seal – superior extrusion resistance to extreme pressure spikes with drift-free performance.

**Optional WP** style mixed media piston seal – low friction primary seal with redundant elastomer delivers superior performance with dissimilar media on either side of the piston.

| Application Demand | HP Seal | KP Seal | RP Seal | WP Seal |
|---|---|---|---|---|
| **Load Holding** | Best | Good | Good | Best |
| **Fluid Compatibility** | Good | Best | Better | Better |
| **Heat Resistance** | Good | Best | Better | Better |
| **Dynamic Friction** | Best | Best | Good | Better |
| **Breakaway Friction** | Good | Best | Good | Better |
| **Extrusion Resistance** | Good | Better | Best | Good |
| **Fluid Isolation** | N/A | N/A | N/A | Best |

(1) When a cushion is specified at the head end:

a. A self-centering stepped sleeve is furnished on the piston rod assembly.

b. A cartridge style needle valve is provided that is flush with the side of the head even when wide open. It is located on side number 2, in all mounting styles except D, DB, DD, DE, JJ, and HH. In these styles it is located on side number 3.

c. All cylinder bores utilize a slotted sleeve as a check valve.

(2) When a cushion is specified at the cap end:

a. A stepped cushion spear is provided on the piston rod.

b. A "float check" self-centering bushing is provided in 1.50" - 6.00" bore cylinders, which incorporates a large flow check valve for fast "out-stroke" action. 7.00" bore and larger cylinders utilize a springless check valve located and identified in the same manner as the head end.

c. A cartridge style needle valve is provided that is flush with the side of the cap when wide open. It is located on side number 2 in all mounting styles except D, DB, DD, DE, JJ, and HH. In these styles it is located on side number 3.

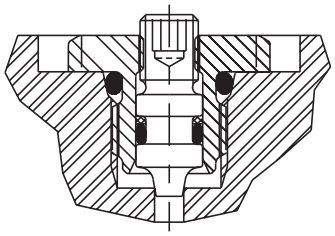

**Cartridge Style Needle Valve**

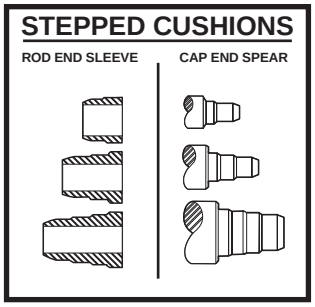

View Table of Contents



# Application Checklist

The following checklist should used to select the best possible cylinder for a given application. Additional information can be referenced in the following pages to help assist in this process. In the event that you have additional questions or concerns, or if more information is required, please contact your local Parker distributor or our customer service representatives for assistance.

1. **Establish the system requirements** ..... Series 2H
   - How heavy is the load to be moved?
   - What is the nominal operating pressure of the system?
   - How far does the load have to move?
   - What is the speed at which the load will move?
   - What is the fluid type and the temperature to which the cylinder will be exposed?
2. **Mounting Style** ..... Pages 5 & 174
   - Determine the best mounting style for the application.
   - If your application requires a mounting style that is not exactly matched by one of our catalog offerings, we can supply the mounting you need. If the required mounting resembles one of our standards, specify that style, enter 'S' in the Special Modification field and provide a dimension drawing of your mount. Special mounting styles that do not resemble a standard style will be designated as style TX by the factory.
3. **Cylinder Bore and Operating Pressure** ..... Pages 164-165
   - Review the theoretical push and pull force for a given bore size to determine.
4. **Piston Rod** ..... Pages 176-178
   - Determine what rod size will be required to avoid buckling.
   - Determine if a single or double rod cylinder is required.
   - Determine the rod end style and rod end thread.
   - Will stop tubing be required?
5. **Piston Seals** ..... Pages VI and VII
   - Determine the best seal type for your application. All selections are high load style that include dual non-metallic wear bands straddling the piston seal.
   - **Parker HP** polyurethane piston seal can hold a load in position and is your best choice for general industrial applications utilizing mineral based fluids in Seal Classes 1 & 4.
   - **Parker KP** filled PTFE piston seal is our lowest friction and highest heat resistance (up to 400° F) offering that will hold a load in position and can withstand high load and is available in all Seal Classes.
   - **Parker RP** self-lubricating, reinforced, heat-stabilized thermoplastic piston seal has the highest resistance to extrusion in extreme pressure spike conditions, can hold a load in position and has long wear characteristics comparable to cast iron rings. RP seals are available in Seal Classes 1, 2, 3, 4 and 6.
   - **Parker WP** mixed-media piston seal is for applications requiring different media on either side of the piston and is ideal with hydraulic fluid on one side of the piston and compressed air on the opposite side. WP seals are available in Seal Classes 1, 2, 3, 5 and 6.
6. **Cushioning** ..... Pages 179-184
   - Determine if cushions are required to safely stop the load.
   - Determine whether optional solid cap cushion construction should be selected over standard floating cushion bushing style.
7. **Ports** ..... Pages 172-173
   - Select the best possible port size for a given speed requirement.
   - Select port position.
8. **Piston rod and mounting accessories** ..... Pages 132-139
   - Determine how you will attach the cylinder to the load.
9. **Custom modifications** ..... Pages 149-162

View Table of Contents



# Mounting Styles & Tips for Applying Them

## Extended Tie Rod Mountings – TB, TC, and TD

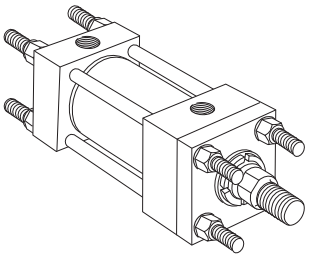

**Application:**
- Straight line force transfer
- Compression loads (push) – use TC or TD
- Tension loads (pull) – use TB or TD

**Advantages:**
- Ease of mounting in tight spaces
- Force is transferred along the centerline of the cylinder

## Flange Mountings – J, JB, JJ, H, HB, and HH

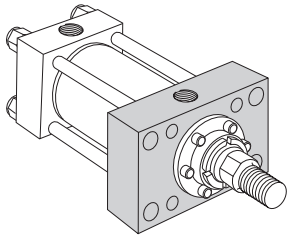

**Application:**
- Straight line force transfer
- Compression loads (push) – use H, HB or HH
- Tension loads (pull) – use J, JB, or JJ

**Advantages:**
- Rigid base mounting due to large flange area
- Force is transferred along the centerline of the cylinder

## Side Tap Mounting – F / Side Lug Mounting – C

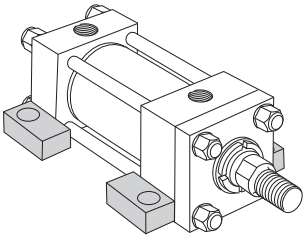

**Application:**
- Straight line force transfer
- Can be used in compression or tension loads
- Thrust key and secure mounting area are vital

**Advantages:**
- Ease of mounting

**Recommendation:**
- Styles F & C should have a minimum stroke at least equal to the bore diameter

## Pivot Mountings – BB, SB and SE

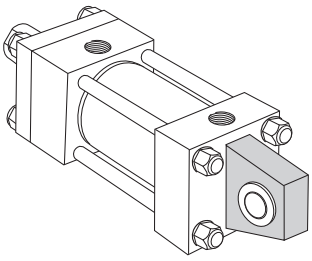

**Application:**
- Curved or arc line force transfer
- Can be used in compression or tension loads
- Movement in a simple arc – use BB mountings
- Movement in a compound arc – use SB or SE mountings

**Advantages:**
- Ease of mounting
- Design flexibility
- Self aligning (SB or SE)

## Trunnion Mountings – D, DB, DD and DE

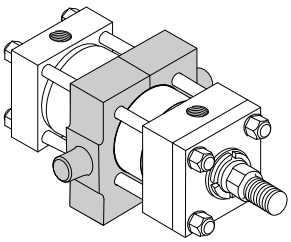

**Application:**
- Curved or arc line force transfer
- Can be used in compression or tension loads
- Compression loads – use DB or DD, DE mountings
- Tension loads – use D, DD or DE mountings

**Advantages:**
- Ease of mounting
- Design flexibility
- Self aligning

View Table of Contents



## 2H & 3H Family Model Code

| 5.00 | C | K | F | P | TB | 2H | H | N | A |
|---|---|---|---|---|---|---|---|---|---|
| Bore Dia. | Cushion Head | Double Rod End Cylinder | Mounting Style | Mounting Modification | Combination Mounting Style[5] | Series Designator | Piston Seal | Piston Magnet | Gland & Seal |

**Bore Dia.**
Specify bore dia. in inches
- 1.50
- 2.00
- 2.50
- 3.25
- 4.00
- 5.00
- 6.00
- 7.00
- 8.00

**Cushion Head**
Use "C" only if head end cushion is required.

**Double Rod End Cylinder**
Use "K" only if a double rod end cylinder is required.[1]

**Mounting Style**
Mounting style offering varies by series. See 'Standard Specifications' pages for availability.
- T = Basic, No Mount
- TB = Tie Rods Extended Head
- TC = Tie Rods Extended Cap
- TD = Tie Rods Extended Both Ends
- J = Head Rectangular Flange
- JB = Head Square Flange
- JJ = Head Rectangular
- H = Cap Rectangular Flange
- HB = Cap Square Flange
- HH = Cap Rectangular
- C = Side Lug[2]
- F = Side Tapped[2]
- BB = Cap Fixed Clevis
- D = Head Trunnion
- DB = Cap Trunnion
- DD = Intermediate Fixed Trunnion[3]
- DE = Heavy Duty Intermediate Fixed Trunnion[3]
- SB = Spherical Bearing
- SE = Heavy Duty Spherical Bearing
- TX = Special Mounting (Consult Factory)[4]

**Mounting Modification**
- P = Use only if Thrust Key required. (Style C or F.)
- M = Use only for Manifold Port O-Ring Seal. Applies to C Mount only.

**Combination Mounting Style[5]**
Any practical mounting style listed.

**Series Designator**
- 1.50"-6.00" Bore 2H, 2HD, 2HB
- 7.00"-8.00" Bore 3H, 3HD, 3HB

**Piston Seal**
- H = Parker HP (standard) Piston Seal
- K = Parker KP (universal) Piston Seal[6]
- R = Parker RP (extrusion resistant) Piston Seal
- W= Parker WP (mixed media) Piston Seal

**Piston Magnet**
- N = No Magnet
- 3 = Magnet Piston with SS Cylinder Tube for Global Switches
- 7 = Magnet with Carbon Steel Cylinder Tube for ALS Switches

**Gland & Seal**

2H & 3H
- A = Threaded Jewel Gland with TS200 Rod Seal (for Class 1 service) – additional Seal Classes are available

2HD, 2HB, 3HD, 3HB
- H = Bolt-on Gland with Tri Lip Rod Seal (for Class 1 & 4 service) – additional Seal Classes are available
- K = Bolt-on Lipseal Gland with Buffer Seal (Not available 0.625" rod)

All Series
- F = Gland with dual PTFE Rod Seals and PTFE Wiperseal[6]

### Series 2HB & 3HB Minimum Stroke Table

| Bore Ø | All Mounting Styles Except DD & DE | Mounting Styles DD & DE |
|---|---|---|
| 1.50 | 1.062 | 2.875 |
| 2.00 | 1.562 | 3.750 |
| 2.50 | 1.437 | 3.625 |
| 3.25 | 1.687 | 4.375 |
| 4.00 | 1.937 | 5.000 |
| 5.00 | 1.937 | 5.437 |
| 6.00 | 2.562 | 6.687 |
| 7.00 | 3.437 | 8.062 |
| 8.00 | 2.937 | 8.250 |

Shaded boxes identify required model number fields.

[1] Available mounting styles for K Type cylinders are located at the end of Section A. When ordering a double rod end cylinder, the piston rod number and piston rod end threads are to be specified for both rod ends.

The model number should be created as viewing the primary rod end on the left hand side.
Example: K Type Cylinder:
4.00CKTD2HLT14A28AC10.000

[2] Mounting Styles C and F should have a minimum stroke length equal to or greater than their bore size.

[3] Specify XI dimension.

[4] Special mounting styles that do not resemble a standard catalog offering will be designated as style TX by the factory. See page 4 for instructions to enter a mounting that resembles a standard style.

[5] In general, the model numbers as read left to right corresponding to the cylinder as viewed from left to right with the primary end at the left. The second or subsequent mountings are mountings called out as they appear in the assembly moving away from the rod end. Except when tie rod extension mountings are part of a combination, all combinations should have a "S" (Special) in the model code and a note in the body of the order clarifying the mounting arrangement. The "P", as used to define a thrust key is not considered to be a mounting. However it is located at the primary end.

[6] Piston seal code K and Gland & Seal code F must be selected for Class 8 service. Dual PTFE rod seals with PTFE wiperseal not available for 0.625" rod.

View Table of Contents



## 2H & 3H Family Model Code

| T | 1 | S | 1 | 4 | 2 | A | C | 16.000 |
|---|---|---|---|---|---|---|---|---|
| Port Type | Seals | Special Modification | Piston Rod Number[9] | Piston Rod End | Piston Rod Alternate Thread[12] | Piston Rod Threads | Cushion Cap | Stroke[8] |

**Seals**

1 = Standard Seals
2 = Water Base Fluid Seals
3 = EPR Seals
4 = Low Temperature Seals
5 = Fluorocarbon Seals
6 = High Water Content Fluid
8 = Energized PTFE Seals
E = Fluorocarbon Seals – Piston Rod only
N = High Temperature Rod Gland[7]

**Special Modification**

Use only if special modifications are required:
Oversize Ports
Port Position Change
Special Seals
Stop Tube[8]
Stroke Adjusters
Tie Rod Supports
Other

**Piston Rod Number[9]**

1
2
3
4
5

**Piston Rod Alternate Thread[12]**

Use only for male thread two times longer than standard.

**Cushion Cap**

C = Standard Floating Cushion Bushing Design
1.50" - 6.00" Bore
F = Solid Cap Orifice Design

**Stroke[8]**

Specify in inches

**Port Type**

T = SAE Straight Thread O-Ring (Std.)
U = NPTF Ports (Dry Seal Pipe Thread)
R = BSP Ports (Parallel Thread ISO 228)
P = SAE 4-Bolt Flange Ports (3,000 psi)
B = BSPT Ports (Taper Thread)
G = Metric Thread Ports
Y = Metric Thread Ports per ISO 6149
M = Used only for Manifold Port O-ring Seal. M option must be specified (Mounting Modification), applies to Mounting Style C only.

**Piston Rod Threads**

A = UNF Standard Integral Cut Thread
H = UNF Optional High Strength Stud (Style 4 through 2.000" rod only)
M = Metric[13]
N = No Thread[14]

**Piston Rod End**

4 = Style 4 Small Male
4B = Style 4 Small Male with Buffer Seal Gland
7 = Style 7 Female Thread for Spherical Rod Eye for Piston Rod Codes larger than Code #1 (Style SB only)
7B = Style 7 Female Thread with Buffer Seal Gland
8 = Style 8 Intermediate Male
8B = Style 8 Intermediate Male with Buffer Seal Gland
9 = Style 9 Short Female[10]
9B = Style 9 Short Female[10] with Buffer Seal Gland
55 = Style 55 Rod End for Flange Coupling
55B = Style 55 Rod End with Buffer Seal Gland
3 = Style 3 Special (Specify)[11]
3B = Style 3 Special (Specify)[11] with Buffer Seal Gland

Shaded boxes identify required model number fields.

7 Energized PTFE rod seals & wiperseal. All other cylinder seals are fluorocarbon. Not available for 0.625" rod.

8 S = Stop Tube. Specify: stop tube length, net stroke and gross stroke. Gross stroke = stop tube length + net stroke. Gross stroke to be placed in the model number field.

Example:

2.000 inches long stop tube
+14.000 inches net stroke
16.000 inches gross stroke

See tables on these pages for minimum allowable strokes for Series 2HB and Piston Rod End Styles 9 & 9B.

9 Refer to Rod buckling chart in Section H to assure rod number selected will not buckle under load.

10 Style 9 stroke restrictions may apply. See Style 9 Minimum Stroke Table for details.

11 Provide dimensions for KK, A, W or WF. If otherwise special, furnish dimensioned sketch.

12 Available only in combination with Style 4 or Style 8.

13 See Section G for detailed information regarding standard metric rod end thread sizes.

14 Must be specified for Piston Rod End Style 55.

### Style 9 Minimum Stroke Table

| Bore Ø | Rod Ø | Minimum Stroke | |
|---|---|---|---|
| | | Style 9 | Style 9B |
| 1.50 - 4.00 | All | None | None |
| 5.00 | 2.000 | None | None |
| | 2.500 | 1.000 | 0.56 |
| | 3.000 | 1.375 | 1.94 |
| | 3.500 | 1.625 | 1.19 |
| 6.00 | 2.500 | None | None |
| | 3.000 | 1.375 | 0.94 |
| | 3.500 | 1.375 | 0.94 |
| | 4.000 | 2.000 | 1.56 |
| 7.00 | 3.000 | 1.250 | 0.81 |
| | 3.500 | 1.500 | 1.06 |
| | 4.000 | 1.500 | 1.06 |
| | 4.500 | 2.500 | 2.06 |
| | 5.000 | 3.125 | 2.31 |
| 8.00 | 3.500 | 1.500 | 1.06 |
| | 4.000 | 1.500 | 1.06 |
| | 4.500 | 2.375 | 1.94 |
| | 5.000 | 2.875 | 2.06 |
| | 5.500 | 3.625 | 2.81 |

View Table of Contents



## Notes

View Table of Contents

# Section B

## Series 2H 1.50" - 6.00" / 3H 7.00" & 8.00" Bore
## Heavy Duty Hydraulic Cylinders


| | 2H 1.50" - 6.00" Bore | 3H 7.00" & 8.00" Bore |
|---|---|---|
| Performance | 10 | 10 |
| Specifications, Mounting Styles | 11 | 32 |
| Rod End Styles and Dimensions | 12-13 | 33 |
| T, TD, TB, TC Mount Dimensions | 14 | 34 |
| J Mount Dimensions | 15 | 35 |
| JB Mount Dimensions | 16 | 36 |
| JJ Mount Dimensions | 17 | 37 |
| H Mount Dimensions | 18 | 38 |
| HB Mount Dimensions | 19 | 39 |
| HH Mount Dimensions | 20 | 39 |
| C Mount Dimensions | 21 | 40 |
| F Mount Dimensions | 22 | 40 |
| BB Mount Dimensions | 23 | 41 |
| D Mount Dimensions | 24 | 42 |
| DB Mount Dimensions | 25 | 43 |
| DD Mount Dimensions | 26 | 44 |
| DE Mount Dimensions | 27 | 45 |
| Style SB Spherical Bearing Mounting | 28 | – |
| Style SE Spherical Bearing Mounting | 29 | 46 |
| Double Rod Cylinders | 30 | 47 |

View Table of Contents



# Parker Series 2H 1.50"-6.00" and 3H 7.00" & 8.00" Bore Heavy Duty Hydraulic Cylinder

Series 2H 1.50"-6.00" and 3H 7.00" & 8.00" Bore cylinders set the standard for performance, durability, and trouble free operation. Parker's superior design, the use of high quality materials and stringent manufacturing practices provide all customers with long cylinder service life and reduced operating costs. Design features such as the "Jewel" rod gland, hard chrome plated piston rods, and stepped cushions provide increased machine productivity through reduced downtime, faster cycle times, and improved system efficiency. Every Parker cylinder is individually tested before leaving our plant to assure proper performance and leak free operation. All Parker Cylinder products carry an eighteen month warranty.

Select Parker Series 2H and 3H cylinders for your hydraulic cylinder requirements. Parker Series 2H and 3H will provide the value and performance you need for all of your industrial hydraulic application demands.

**Parker "Jewel" Gland with TS2000 Sealing System**

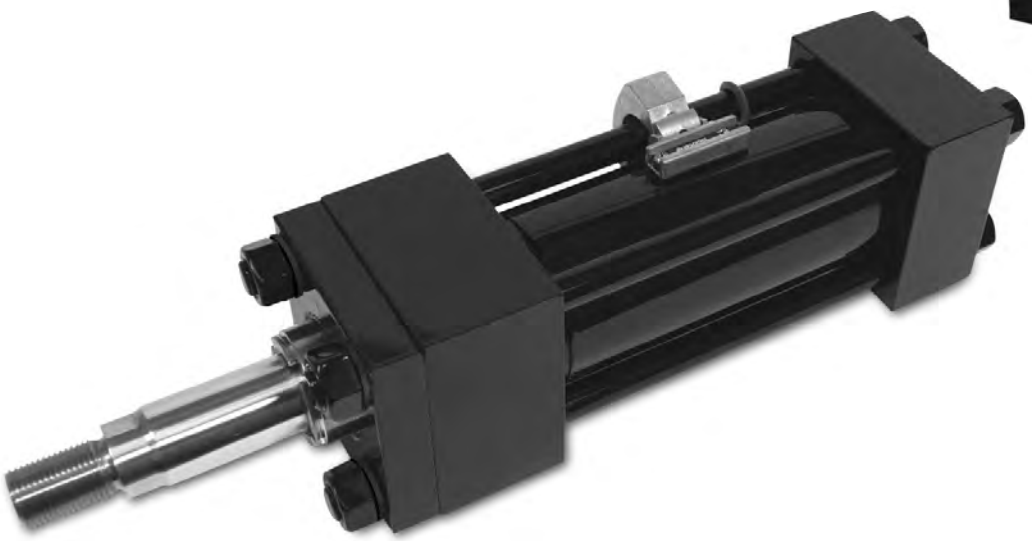

View Table of Contents

## Standard Specifications

- Heavy Duty Service – ANSI/(NFPA) T3.6.7R3 - 2009 Specifications and Mounting Dimension Standards
- Standard Construction – Square Head – Tie Rod Design
- Nominal Pressure – 3000 psi[1]
- Standard Fluid – Hydraulic Oil
- Standard Temperature – -10°F to +165°F[2]
- Bore Diameters – 1.50" through 6.00" (Larger sizes available)

*In line with our policy of continuing product improvement, specifications in this catalog are subject to change.*

Note: Series 2H Hydraulic Cylinders fully meet ANSI/(NFPA) T3.6.7R3 - 2009 Specifications and Mounting Dimension Standards for Square Head Industrial Fluid Power Cylinders.

- Piston Rod Diameter – 0.625" through 4.000"
- Mounting Styles – 19 standard styles at various application ratings
- Strokes – Available in any practical stroke length
- Cushions – Optional at either end or both ends of stroke. "Float Check" design is standard at cap end.
- Rod Ends – Four Standard Choices – Specials to Order

[1] If hydraulic operating pressure exceeds 3000 psi, send application data for engineering evaluation and recommendation. See Section H for actual design factors.

[2] See Section H for higher temperature service.



## Available Mounting Styles

Basic

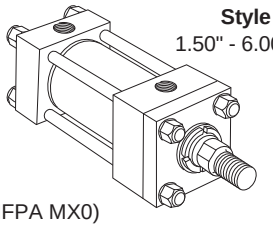

**Style T**
1.50" - 6.00"
(NFPA MX0)

Tie Rods Extended Head End

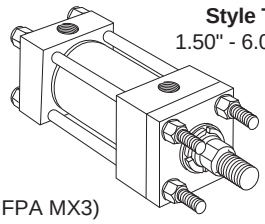

**Style TB**
1.50" - 6.00"
(NFPA MX3)

Tie Rods Extended Cap End

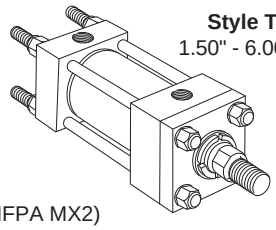

**Style TC**
1.50" - 6.00"
(NFPA MX2)

Tie Rods Extended Both Ends

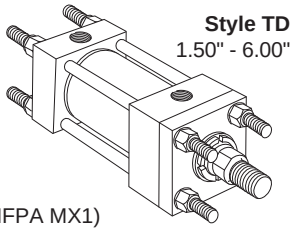

**Style TD**
1.50" - 6.00"
(NFPA MX1)

Head Rectangular Flange

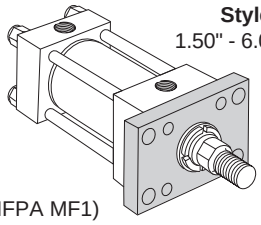

**Style J**
1.50" - 6.00"
(NFPA MF1)

Head Square Flange

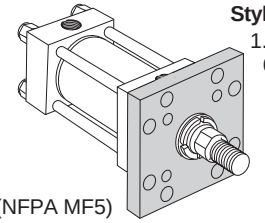

**Style JB**
1.50" - 6.00"
(NFPA MF5)

Head Rectangular

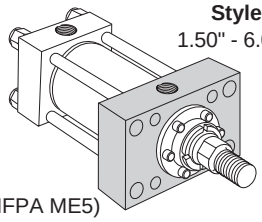

**Style JJ**
1.50" - 6.00"
(NFPA ME5)

Cap Rectangular Flange

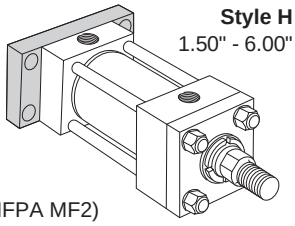

**Style H**
1.50" - 6.00"
(NFPA MF2)

Cap Square Flange

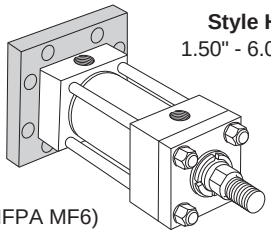

**Style HB**
1.50" - 6.00"
(NFPA MF6)

Cap Rectangular

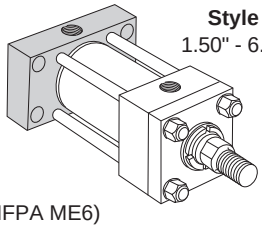

**Style HH**
1.50" - 6.00"
(NFPA ME6)

Side Lug

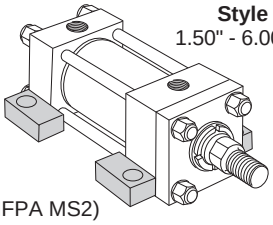

**Style C**
1.50" - 6.00"
(NFPA MS2)

Side Tapped

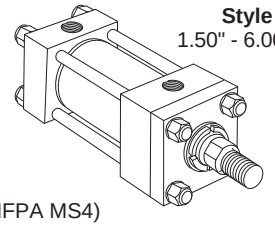

**Style F**
1.50" - 6.00"
(NFPA MS4)

Cap Fixed Clevis

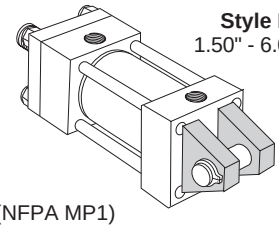

**Style BB**
1.50" - 6.00"
(NFPA MP1)

Head Trunnion

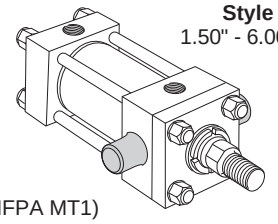

**Style D**
1.50" - 6.00"
(NFPA MT1)

Cap Trunnion

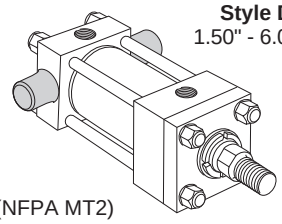

**Style DB**
1.50" - 6.00"
(NFPA MT2)

Intermediate Fixed Trunnion

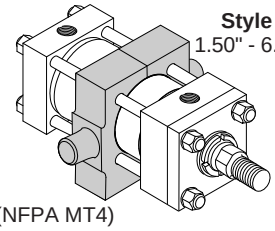

**Style DD**
1.50" - 6.00"
(NFPA MT4)

HD Intermediate Fixed Trunnion

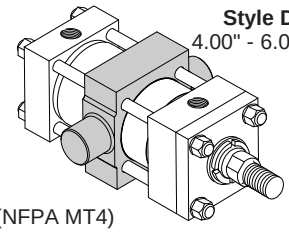

**Style DE**
4.00" - 6.00"
(NFPA MT4)

Spherical Bearing

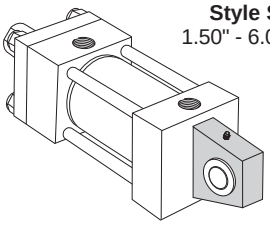

**Style SB**
1.50" - 6.00"

HD Spherical Bearing

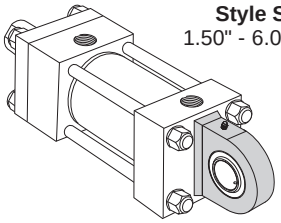

**Style SE**
1.50" - 6.00"

Double Rod Cylinders

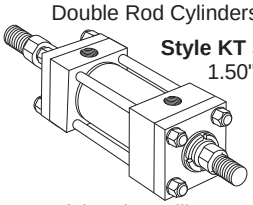

**Style KT Shown**
1.50" - 6.00"

Most of the above illustrated mounting styles are available in double rod cylinders.



**Parker Hannifin Corporation**
Cylinder Division
Des Plaines, Illinois USA

View Table of Contents



## Rod End Dimensions

**Thread Style 4 (NFPA Style SM)**
**Small Male**

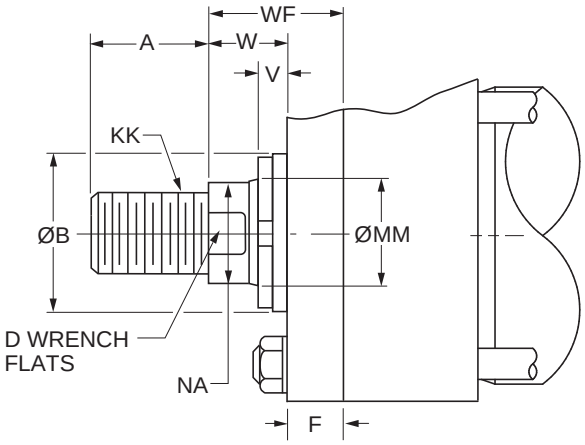


**Thread Style 8 (NFPA Style IM)**
**Intermediate Male**

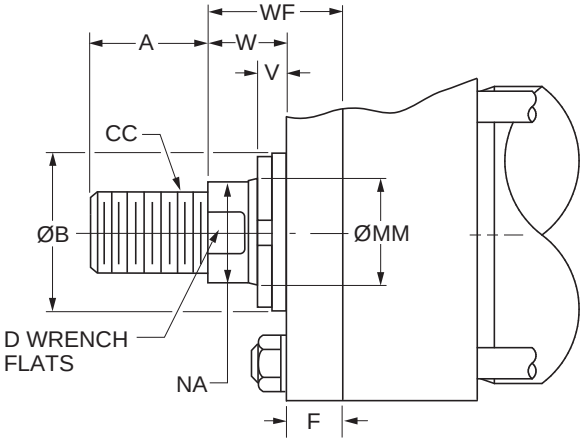


## Rod End Dimensions

| Bore Ø | Rod No. | MM Rod Ø | Thread Style 8 CC | Thread Style 4 KK | A | B Ø +.000 -.002 | D | F | NA | V | W | WF |
|---|---|---|---|---|---|---|---|---|---|---|---|---|
| 1.50 | 1 (Std.) | 0.625 | 1/2-20 | 7/16-20 | 0.75 | 1.124 | 0.50 | 0.38 | 0.56 | 0.25 | 0.63 | 1.00 |
| | 2 | 1.000 | 7/8-14 | 3/4-16 | 1.13 | 1.499 | 0.88 | 0.38 | 0.94 | 0.50 | 1.00 | 1.38 |
| 2.00 | 1 (Std.) | 1.000 | 7/8-14 | 3/4-16 | 1.13 | 1.499 | 0.88 | 0.63 | 0.94 | 0.25 | 0.75 | 1.38 |
| | 2 | 1.375 | 1 1/4-12 | 1-14 | 1.63 | 1.999 | 1.13 | 0.63 | 1.31 | 0.38 | 1.00 | 1.63 |
| 2.50 | 1 (Std.) | 1.000 | 7/8-14 | 3/4-16 | 1.13 | 1.499 | 0.88 | 0.63 | 0.94 | 0.25 | 0.75 | 1.38 |
| | 2 | 1.750 | 1 1/2-12 | 1 1/4-12 | 2.00 | 2.374 | 1.50 | 0.63 | 1.69 | 0.50 | 1.25 | 1.88 |
| | 3 | 1.375 | 1 1/4-12 | 1-14 | 1.63 | 1.999 | 1.13 | 0.63 | 1.31 | 0.38 | 1.00 | 1.63 |
| 3.25 | 1 (Std.) | 1.375 | 1 1/4-12 | 1-14 | 1.63 | 1.999 | 1.13 | 0.75 | 1.31 | 0.25 | 0.88 | 1.63 |
| | 2 | 2.000 | 1 3/4-12 | 1 1/2-12 | 2.25 | 2.624 | 1.69 | 0.75 | 1.94 | 0.38 | 1.25 | 2.00 |
| | 3 | 1.750 | 1 1/2-12 | 1 1/4-12 | 2.00 | 2.374 | 1.50 | 0.75 | 1.69 | 0.38 | 1.13 | 1.88 |
| 4.00 | 1 (Std.) | 1.750 | 1 1/2-12 | 1 1/4-12 | 2.00 | 2.374 | 1.50 | 0.88 | 1.69 | 0.25 | 1.00 | 1.88 |
| | 2 | 2.500 | 2 1/4-12 | 1 7/8-12 | 3.00 | 3.124 | 2.06 | 0.88 | 2.38 | 0.38 | 1.38 | 2.25 |
| | 3 | 2.000 | 1 3/4-12 | 1 1/2-12 | 2.25 | 2.624 | 1.69 | 0.88 | 1.94 | 0.25 | 1.13 | 2.00 |
| 5.00 | 1 (Std.) | 2.000 | 1 3/4-12 | 1 1/2-12 | 2.25 | 2.624 | 1.69 | 0.88 | 1.94 | 0.25 | 1.13 | 2.00 |
| | 2 | 3.500 | 3 1/4-12 | 2 1/2-12 | 3.50 | 4.249 | 3.00 | 0.88 | 3.38 | 0.38 | 1.38 | 2.25 |
| | 3 | 2.500 | 2 1/4-12 | 1 7/8-12 | 3.00 | 3.124 | 2.06 | 0.88 | 2.38 | 0.38 | 1.38 | 2.25 |
| | 4 | 3.000 | 2 3/4-12 | 2 1/4-12 | 3.50 | 3.749 | 2.63 | 0.88 | 2.88 | 0.38 | 1.38 | 2.25 |
| 6.00 | 1 (Std.) | 2.500 | 2 1/4-12 | 1 7/8-12 | 3.00 | 3.124 | 2.06 | 1.00 | 2.38 | 0.25 | 1.25 | 2.25 |
| | 2 | 4.000 | 3 3/4-12 | 3-12 | 4.00 | 4.749 | 3.38 | 1.00 | 3.88 | 0.25 | 1.25 | 2.25 |
| | 3 | 3.000 | 2 3/4-12 | 2 1/4-12 | 3.50 | 3.749 | 2.63 | 1.00 | 2.88 | 0.25 | 1.25 | 2.25 |
| | 4 | 3.500 | 3 1/4-12 | 2 1/2-12 | 3.50 | 4.249 | 3.00 | 1.00 | 3.38 | 0.25 | 1.25 | 2.25 |

**"Special" Thread Style 3**
Special thread, extension, rod eye, blank, etc., are also available.

To order, specify "Style 3" and give desired dimensions for KK, A, W or WF.
If otherwise special, furnish dimensioned sketch.

View Table of Contents

## Rod End Dimensions

**Thread Style 9[2]**
**(NFPA Style SF) Small Female**

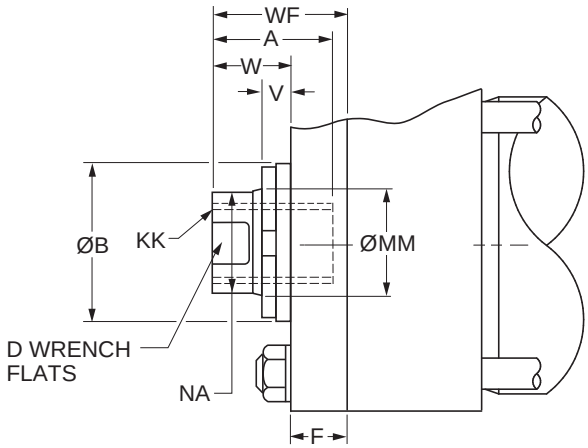


**Style 55[1]**
**Flanged Rod End**

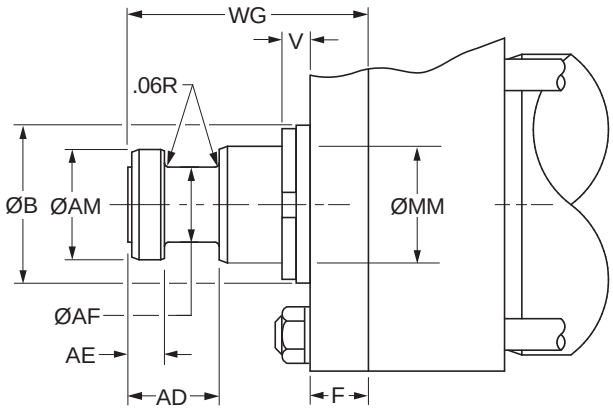


## Rod End Dimensions

| Bore Ø | Rod No. | MM Rod Ø | Thread Style 9 KK | A | AD | AE +.001 -.001 | AF Ø | AM Ø | B Ø +.000 -.002 | D | F | NA | V | W | WF | WG |
|---|---|---|---|---|---|---|---|---|---|---|---|---|---|---|---|---|
| 1.50 | 1 (Std.) | 0.625 | 7/16-20 | 0.75 | 0.63 | 0.249 | 0.38 | 0.57 | 1.124 | 0.50 | 0.38 | 0.56 | 0.25 | 0.63 | 1.00 | 1.75 |
| | 2 | 1.000 | 3/4-16 | 1.13 | 0.94 | 0.374 | 0.69 | 0.95 | 1.499 | 0.88 | 0.38 | 0.94 | 0.50 | 1.00 | 1.38 | 2.38 |
| 2.00 | 1 (Std.) | 1.000 | 3/4-16 | 1.13 | 0.94 | 0.374 | 0.69 | 0.95 | 1.499 | 0.88 | 0.63 | 0.94 | 0.25 | 0.75 | 1.38 | 2.38 |
| | 2 | 1.375 | 1-14 | 1.63 | 1.06 | 0.374 | 0.88 | 1.32 | 1.999 | 1.13 | 0.63 | 1.31 | 0.38 | 1.00 | 1.63 | 2.75 |
| 2.50 | 1 (Std.) | 1.000 | 3/4-16 | 1.13 | 0.94 | 0.374 | 0.69 | 0.95 | 1.499 | 0.88 | 0.63 | 0.94 | 0.25 | 0.75 | 1.38 | 2.38 |
| | 2 | 1.750 | 1 1/4-12 | 2.00 | 1.31 | 0.499 | 1.13 | 1.70 | 2.374 | 1.50 | 0.63 | 1.69 | 0.50 | 1.25 | 1.88 | 3.13 |
| | 3 | 1.375 | 1-14 | 1.63 | 1.06 | 0.374 | 0.88 | 1.32 | 1.999 | 1.13 | 0.63 | 1.31 | 0.38 | 1.00 | 1.63 | 2.75 |
| 3.25 | 1 (Std.) | 1.375 | 1-14 | 1.63 | 1.06 | 0.374 | 0.88 | 1.32 | 1.999 | 1.13 | 0.75 | 1.31 | 0.25 | 0.88 | 1.63 | 2.75 |
| | 2 | 2.000 | 1 1/2-12 | 2.25 | 1.69 | 0.624 | 1.38 | 1.95 | 2.624 | 1.69 | 0.75 | 1.94 | 0.38 | 1.25 | 2.00 | 3.75 |
| | 3 | 1.750 | 1 1/4-12 | 2.00 | 1.31 | 0.499 | 1.13 | 1.70 | 2.374 | 1.50 | 0.75 | 1.69 | 0.38 | 1.13 | 1.88 | 3.13 |
| 4.00 | 1 (Std.) | 1.750 | 1 1/4-12 | 2.00 | 1.31 | 0.499 | 1.13 | 1.70 | 2.374 | 1.50 | 0.88 | 1.69 | 0.25 | 1.00 | 1.88 | 3.13 |
| | 2 | 2.500 | 1 7/8-12 | 3.00 | 1.94 | 0.749 | 1.75 | 2.45 | 3.124 | 2.06 | 0.88 | 2.38 | 0.38 | 1.38 | 2.25 | 4.50 |
| | 3 | 2.000 | 1 1/2-12 | 2.25 | 1.69 | 0.624 | 1.38 | 1.95 | 2.624 | 1.69 | 0.88 | 1.94 | 0.25 | 1.13 | 2.00 | 3.75 |
| 5.00 | 1 (Std.) | 2.000 | 1 1/2-12 | 2.25 | 1.69 | 0.624 | 1.38 | 1.95 | 2.624 | 1.69 | 0.88 | 1.94 | 0.25 | 1.13 | 2.00 | 3.75 |
| | 2 | 3.500 | 2 1/2-12 | 3.50 | 2.69 | 0.999 | 2.50 | 3.45 | 4.249 | 3.00 | 0.88 | 3.38 | 0.38 | 1.38 | 2.25 | 5.63 |
| | 3 | 2.500 | 1 7/8-12 | 3.00 | 1.94 | 0.749 | 1.75 | 2.45 | 3.124 | 2.06 | 0.88 | 2.38 | 0.38 | 1.38 | 2.25 | 4.50 |
| | 4 | 3.000 | 2 1/4-12 | 3.50 | 2.44 | 0.874 | 2.25 | 2.95 | 3.749 | 2.63 | 0.88 | 2.88 | 0.38 | 1.38 | 2.25 | 4.88 |
| 6.00 | 1 (Std.) | 2.500 | 1 7/8-12 | 3.00 | 1.94 | 0.749 | 1.75 | 2.45 | 3.124 | 2.06 | 1.00 | 2.38 | 0.25 | 1.25 | 2.25 | 4.50 |
| | 2 | 4.000 | 3-12 | 4.00 | 2.69 | 0.999 | 3.00 | 3.95 | 4.749 | 3.38 | 1.00 | 3.88 | 0.25 | 1.25 | 2.25 | 5.75 |
| | 3 | 3.000 | 2 1/4-12 | 3.50 | 2.44 | 0.874 | 2.25 | 2.95 | 3.749 | 2.63 | 1.00 | 2.88 | 0.25 | 1.25 | 2.25 | 4.88 |
| | 4 | 3.500 | 2 1/2-12 | 3.50 | 2.69 | 0.999 | 2.50 | 3.45 | 4.249 | 3.00 | 1.00 | 3.38 | 0.25 | 1.25 | 2.25 | 5.63 |

**"Special" Thread Style 3**
Special thread, extension, rod eye, blank, etc., are also available.

To order, specify "Style 3" and give desired dimensions for KK, A, W or WF.
If otherwise special, furnish dimensioned sketch.

[1] For special WG dimension, specify "Style 3" and give desired dimension for WG. For other changes, place "S" in the model code, and describe rod end with dimensioned sketch.

[2] Style 9 stroke restrictions may apply. See Style 9 Minimum Stroke Table on How to Order page for details.

View Table of Contents



## Tie Rods Extended Both Ends Mounting

Style TD
(NFPA Style MX1)

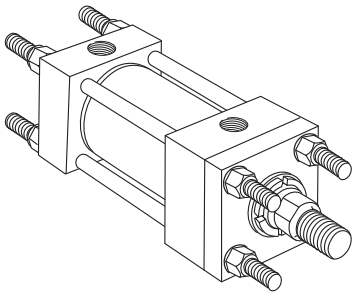

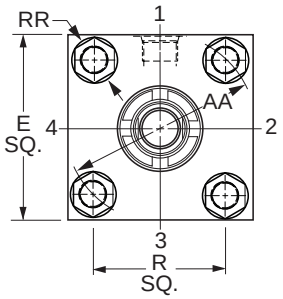


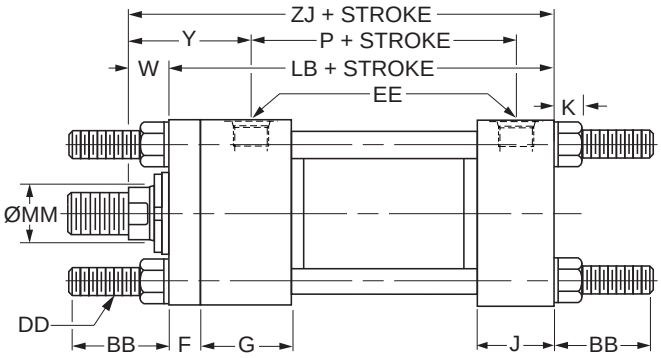


## Style TD – Dimensional and Mounting Data

| Bore Ø | Rod No. | MM Rod Ø | AA | BB | DD | E | EE | | F | G | J | K Max. | R | RR | W | Y | Add Stroke | | |
|---|---|---|---|---|---|---|---|---|---|---|---|---|---|---|---|---|---|---|---|
| | | | | | | | NPTF[1] | SAE[2] | | | | | | | | | LB | P | ZJ |
| 1.50 | 1 (std.) | 0.625 | 2.31 | 1.38 | 3/8-24 | 2.50 | 1/2 | 10 | 0.38 | 1.75 | 1.50 | 0.42 | 1.63 | 0.68 | 0.63 | 2.00 | 5.00 | 2.88 | 5.63 |
| | 2 | 1.000 | 2.31 | 1.38 | 3/8-24 | 2.50 | 1/2 | 10 | 0.38 | 1.75 | 1.50 | 0.42 | 1.63 | 0.68 | 1.00 | 2.38 | 5.00 | 2.88 | 6.00 |
| 2.00 | 1 (std.) | 1.000 | 2.90 | 1.81 | 1/2-20 | 3.00 | 1/2 | 10 | 0.63 | 1.75 | 1.50 | 0.57 | 2.05 | 0.90 | 0.75 | 2.38 | 5.25 | 2.88 | 6.00 |
| | 2 | 1.375 | 2.90 | 1.81 | 1/2-20 | 3.00 | 1/2 | 10 | 0.63 | 1.75 | 1.50 | 0.57 | 2.05 | 0.90 | 1.00 | 2.63 | 5.25 | 2.88 | 6.25 |
| 2.50 | 1 (std.) | 1.000 | 3.61 | 1.81 | 1/2-20 | 3.50 | 1/2 | 10 | 0.63 | 1.75 | 1.50 | 0.57 | 2.55 | 0.90 | 0.75 | 2.38 | 5.38 | 3.00 | 6.13 |
| | 2 | 1.750 | 3.61 | 1.81 | 1/2-20 | 3.50 | 1/2 | 10 | 0.63 | 1.75 | 1.50 | 0.57 | 2.55 | 0.90 | 1.25 | 2.88 | 5.38 | 3.00 | 6.63 |
| | 3 | 1.375 | 3.61 | 1.81 | 1/2-20 | 3.50 | 1/2 | 10 | 0.63 | 1.75 | 1.50 | 0.57 | 2.55 | 0.90 | 1.00 | 2.63 | 5.38 | 3.00 | 6.38 |
| 3.25 | 1 (std.) | 1.375 | 4.60 | 2.31 | 5/8-18 | 4.50 | 3/4 | 12 | 0.75 | 2.00 | 1.75 | 0.68 | 3.25 | 1.11 | 0.88 | 2.75 | 6.25 | 3.50 | 7.13 |
| | 2 | 2.000 | 4.60 | 2.31 | 5/8-18 | 4.50 | 3/4 | 12 | 0.75 | 2.00 | 1.75 | 0.68 | 3.25 | 1.11 | 1.25 | 3.13 | 6.25 | 3.50 | 7.50 |
| | 3 | 1.750 | 4.60 | 2.31 | 5/8-18 | 4.50 | 3/4 | 12 | 0.75 | 2.00 | 1.75 | 0.68 | 3.25 | 1.11 | 1.13 | 3.00 | 6.25 | 3.50 | 7.38 |
| 4.00 | 1 (std.) | 1.750 | 5.40 | 2.31 | 5/8-18 | 5.00 | 3/4 | 12 | 0.88 | 2.00 | 1.75 | 0.68 | 3.82 | 1.11 | 1.00 | 3.00 | 6.63 | 3.75 | 7.63 |
| | 2 | 2.500 | 5.40 | 2.31 | 5/8-18 | 5.00 | 3/4 | 12 | 0.88 | 2.00 | 1.75 | 0.68 | 3.82 | 1.11 | 1.38 | 3.38 | 6.63 | 3.75 | 8.00 |
| | 3 | 2.000 | 5.40 | 2.31 | 5/8-18 | 5.00 | 3/4 | 12 | 0.88 | 2.00 | 1.75 | 0.68 | 3.82 | 1.11 | 1.13 | 3.13 | 6.63 | 3.75 | 7.75 |
| 5.00 | 1 (std.) | 2.000 | 7.00 | 3.19 | 7/8-14 | 6.50 | 3/4 | 12 | 0.88 | 2.00 | 1.75 | 0.94 | 4.95 | 1.55 | 1.13 | 3.13 | 7.13 | 4.25 | 8.25 |
| | 2 | 3.500 | 7.00 | 3.19 | 7/8-14 | 6.50 | 3/4 | 12 | 0.88 | 2.00 | 1.75 | 0.94 | 4.95 | 1.55 | 1.38 | 3.38 | 7.13 | 4.25 | 8.50 |
| | 3 | 2.500 | 7.00 | 3.19 | 7/8-14 | 6.50 | 3/4 | 12 | 0.88 | 2.00 | 1.75 | 0.94 | 4.95 | 1.55 | 1.38 | 3.38 | 7.13 | 4.25 | 8.50 |
| | 4 | 3.000 | 7.00 | 3.19 | 7/8-14 | 6.50 | 3/4 | 12 | 0.88 | 2.00 | 1.75 | 0.94 | 4.95 | 1.55 | 1.38 | 3.38 | 7.13 | 4.25 | 8.50 |
| 6.00 | 1 (std.) | 2.500 | 8.10 | 3.63 | 1-14 | 7.50 | 1 | 16 | 1.00 | 2.25 | 2.25 | 1.05 | 5.73 | 1.77 | 1.25 | 3.50 | 8.38 | 4.88 | 9.63 |
| | 2 | 4.000 | 8.10 | 3.63 | 1-14 | 7.50 | 1 | 16 | 1.00 | 2.25 | 2.25 | 1.05 | 5.73 | 1.77 | 1.25 | 3.50 | 8.38 | 4.88 | 9.63 |
| | 3 | 3.000 | 8.10 | 3.63 | 1-14 | 7.50 | 1 | 16 | 1.00 | 2.25 | 2.25 | 1.05 | 5.73 | 1.77 | 1.25 | 3.50 | 8.38 | 4.88 | 9.63 |
| | 4 | 3.500 | 8.10 | 3.63 | 1-14 | 7.50 | 1 | 16 | 1.00 | 2.25 | 2.25 | 1.05 | 5.73 | 1.77 | 1.25 | 3.50 | 8.38 | 4.88 | 9.63 |

[1]NPTF ports are available at no extra charge.
[2]SAE straight thread ports are standard and are indicated by port number.

### Style T

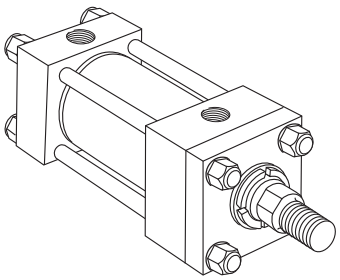

### Style TB

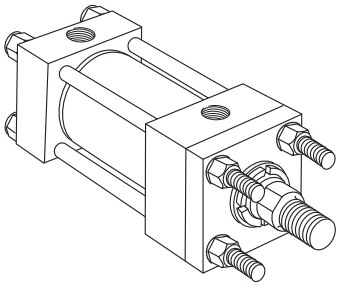

### Style TC

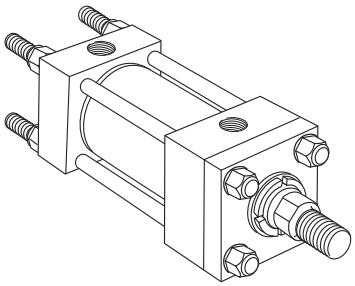

Dimensions for T, TB and TC Mount may be obtained from the above dimensional table.

View Table of Contents

## Head Rectangular Flange Mounting

Style J
(NFPA Style MF1)

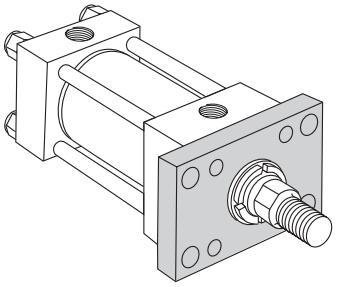

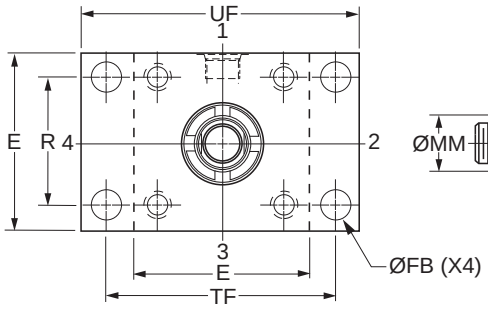


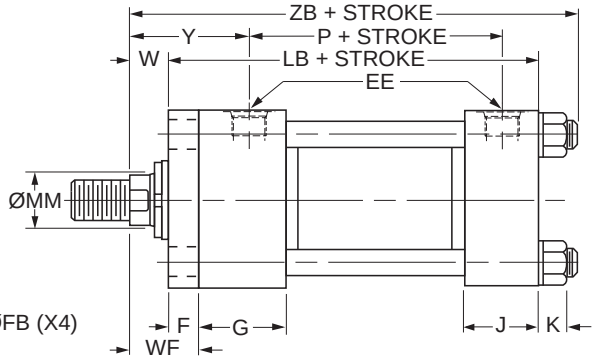


### Style J – Dimensional and Mounting Data

| Bore Ø | E | EE | | F | FB Ø | G | J | K Max. | R | TF | UF | Add Stroke | |
|---|---|---|---|---|---|---|---|---|---|---|---|---|---|
| | | NPTF[1] | SAE[2] | | | | | | | | | LB | P |
| 1.50 | 2.50 | 1/2 | 10 | 0.38 | 0.44 | 1.75 | 1.50 | 0.42 | 1.63 | 3.44 | 4.25 | 5.00 | 2.88 |
| 2.00 | 3.00 | 1/2 | 10 | 0.63 | 0.56 | 1.75 | 1.50 | 0.57 | 2.05 | 4.13 | 5.13 | 5.25 | 2.88 |
| 2.50 | 3.50 | 1/2 | 10 | 0.63 | 0.56 | 1.75 | 1.50 | 0.57 | 2.55 | 4.63 | 5.63 | 5.38 | 3.00 |
| 3.25 | 4.50 | 3/4 | 12 | 0.75 | 0.69 | 2.00 | 1.75 | 0.68 | 3.25 | 5.88 | 7.13 | 6.25 | 3.50 |
| 4.00 | 5.00 | 3/4 | 12 | 0.88 | 0.69 | 2.00 | 1.75 | 0.68 | 3.82 | 6.38 | 7.63 | 6.63 | 3.75 |
| 5.00 | 6.50 | 3/4 | 12 | 0.88 | 0.94 | 2.00 | 1.75 | 0.94 | 4.95 | 8.19 | 9.75 | 7.13 | 4.25 |
| 6.00 | 7.50 | 1 | 16 | 1.00 | 1.06 | 2.25 | 2.25 | 1.05 | 5.73 | 9.44 | 11.25 | 8.38 | 4.88 |

[1]NPTF ports are available at no extra charge.
[2]SAE straight thread ports are standard and are indicated by port number.

### Style J – Dimensional and Mounting Data

| Bore Ø | Rod No. | MM Rod Ø | W | WF | Y | Add Stroke ZB Max. |
|---|---|---|---|---|---|---|
| 1.50 | 1 (std.) | 0.625 | 0.63 | 1.00 | 2.00 | 6.29 |
| | 2 | 1.000 | 1.00 | 1.38 | 2.38 | 6.67 |
| 2.00 | 1 (std.) | 1.000 | 0.75 | 1.38 | 2.38 | 6.81 |
| | 2 | 1.375 | 1.00 | 1.63 | 2.63 | 7.06 |
| 2.50 | 1 (std.) | 1.000 | 0.75 | 1.38 | 2.38 | 6.93 |
| | 2 | 1.750 | 1.25 | 1.88 | 2.88 | 7.43 |
| | 3 | 1.375 | 1.00 | 1.63 | 2.63 | 7.18 |
| 3.25 | 1 (std.) | 1.375 | 0.88 | 1.63 | 2.75 | 8.06 |
| | 2 | 2.000 | 1.25 | 2.00 | 3.13 | 8.43 |
| | 3 | 1.750 | 1.13 | 1.88 | 3.00 | 8.31 |
| 4.00 | 1 (std.) | 1.750 | 1.00 | 1.88 | 3.00 | 8.56 |
| | 2 | 2.500 | 1.38 | 2.25 | 3.38 | 8.94 |
| | 3 | 2.000 | 1.13 | 2.00 | 3.13 | 8.68 |
| 5.00 | 1 (std.) | 2.000 | 1.13 | 2.00 | 3.13 | 9.44 |
| | 2 | 3.500 | 1.38 | 2.25 | 3.38 | 9.69 |
| | 3 | 2.500 | 1.38 | 2.25 | 3.38 | 9.69 |
| | 4 | 3.000 | 1.38 | 2.25 | 3.38 | 9.69 |
| 6.00 | 1 (std.) | 2.500 | 1.25 | 2.25 | 3.50 | 10.93 |
| | 2 | 4.000 | 1.25 | 2.25 | 3.50 | 10.93 |
| | 3 | 3.000 | 1.25 | 2.25 | 3.50 | 10.93 |
| | 4 | 3.500 | 1.25 | 2.25 | 3.50 | 10.93 |

### Style J – Maximum Operating Pressure / 2H

| Bore Ø | Maximum psi Push[3] Rod Code | | | |
|---|---|---|---|---|
| | 1 | 2 | 3 | 4 |
| 1.50 | 1500 | 1000 | - | - |
| 2.00 | 2000 | 1200 | - | - |
| 2.50 | 2000 | 1100 | 1500 | - |
| 3.25 | 1800 | 1300 | 1400 | - |
| 4.00 | 1800 | 1300 | 1700 | - |
| 5.00 | 1300 | 800 | 1200 | 1000 |
| 6.00 | 1200 | 800 | 1000 | 900 |

[3]Maximum Pressure Rating – Push Application.

View Table of Contents



## Head Square Flange Mounting

Style JB
(NFPA Style MF5)

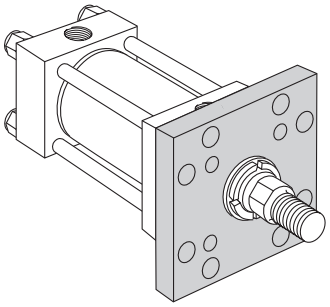

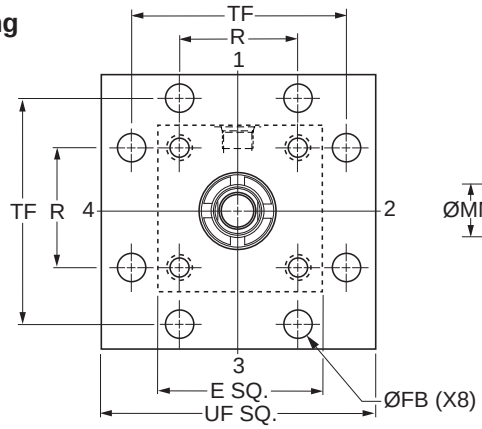


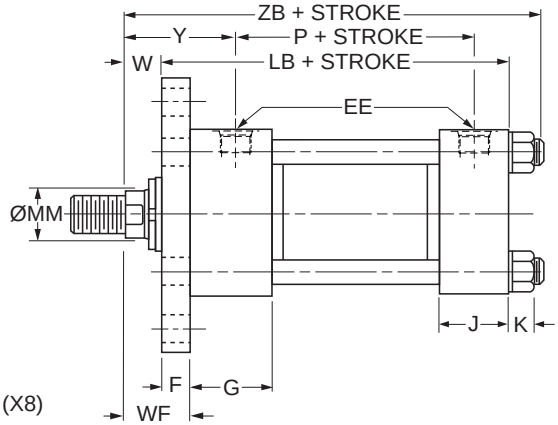


### Style JB – Dimensional and Mounting Data

| Bore Ø | E | EE | | F | FB Ø | G | J | K Max. | R | TF | UF | Add Stroke | |
|---|---|---|---|---|---|---|---|---|---|---|---|---|---|
| | | NPTF[1] | SAE[2] | | | | | | | | | LB | P |
| 1.50 | 2.50 | 1/2 | 10 | 0.38 | 0.44 | 1.75 | 1.50 | 0.42 | 1.63 | 3.44 | 4.25 | 5.00 | 2.88 |
| 2.00 | 3.00 | 1/2 | 10 | 0.63 | 0.56 | 1.75 | 1.50 | 0.57 | 2.05 | 4.13 | 5.13 | 5.25 | 2.88 |
| 2.50 | 3.50 | 1/2 | 10 | 0.63 | 0.56 | 1.75 | 1.50 | 0.57 | 2.55 | 4.63 | 5.63 | 5.38 | 3.00 |
| 3.25 | 4.50 | 3/4 | 12 | 0.75 | 0.69 | 2.00 | 1.75 | 0.68 | 3.25 | 5.88 | 7.13 | 6.25 | 3.50 |
| 4.00 | 5.00 | 3/4 | 12 | 0.88 | 0.69 | 2.00 | 1.75 | 0.68 | 3.82 | 6.38 | 7.63 | 6.63 | 3.75 |
| 5.00 | 6.50 | 3/4 | 12 | 0.88 | 0.94 | 2.00 | 1.75 | 0.94 | 4.95 | 8.19 | 9.75 | 7.13 | 4.25 |
| 6.00 | 7.50 | 1 | 16 | 1.00 | 1.06 | 2.25 | 2.25 | 1.05 | 5.73 | 9.44 | 11.25 | 8.38 | 4.88 |

[1]NPTF ports are available at no extra charge.
[2]SAE straight thread ports are standard and are indicated by port number.

### Style JB – Dimensional and Mounting Data

| Bore Ø | Rod No. | MM Rod Ø | W | WF | Y | Add Stroke ZB Max. |
|---|---|---|---|---|---|---|
| 1.50 | 1 (std.) | 0.625 | 0.63 | 1.00 | 2.00 | 6.29 |
| | 2 | 1.000 | 1.00 | 1.38 | 2.38 | 6.67 |
| 2.00 | 1 (std.) | 1.000 | 0.75 | 1.38 | 2.38 | 6.81 |
| | 2 | 1.375 | 1.00 | 1.63 | 2.63 | 7.06 |
| 2.50 | 1 (std.) | 1.000 | 0.75 | 1.38 | 2.38 | 6.93 |
| | 2 | 1.750 | 1.25 | 1.88 | 2.88 | 7.43 |
| | 3 | 1.375 | 1.00 | 1.63 | 2.63 | 7.18 |
| 3.25 | 1 (std.) | 1.375 | 0.88 | 1.63 | 2.75 | 8.06 |
| | 2 | 2.000 | 1.25 | 2.00 | 3.13 | 8.43 |
| | 3 | 1.750 | 1.13 | 1.88 | 3.00 | 8.31 |
| 4.00 | 1 (std.) | 1.750 | 1.00 | 1.88 | 3.00 | 8.56 |
| | 2 | 2.500 | 1.38 | 2.25 | 3.38 | 8.94 |
| | 3 | 2.000 | 1.13 | 2.00 | 3.13 | 8.68 |
| 5.00 | 1 (std.) | 2.000 | 1.13 | 2.00 | 3.13 | 9.44 |
| | 2 | 3.500 | 1.38 | 2.25 | 3.38 | 9.69 |
| | 3 | 2.500 | 1.38 | 2.25 | 3.38 | 9.69 |
| | 4 | 3.000 | 1.38 | 2.25 | 3.38 | 9.69 |
| 6.00 | 1 (std.) | 2.500 | 1.25 | 2.25 | 3.50 | 10.93 |
| | 2 | 4.000 | 1.25 | 2.25 | 3.50 | 10.93 |
| | 3 | 3.000 | 1.25 | 2.25 | 3.50 | 10.93 |
| | 4 | 3.500 | 1.25 | 2.25 | 3.50 | 10.93 |

### Style JB – Maximum Operating Pressure / 2H

| Bore Ø | Maximum psi Push[3] Rod Code | | | |
|---|---|---|---|---|
| | 1 | 2 | 3 | 4 |
| 1.50 | 3000 | 3000 | - | - |
| 2.00 | 3000 | 3000 | - | - |
| 2.50 | 3000 | 3000 | 3000 | - |
| 3.25 | 3000 | 3000 | 3000 | - |
| 4.00 | 3000 | 3000 | 3000 | - |
| 5.00 | 3000 | 3000 | 3000 | 3000 |
| 6.00 | 3000 | 2700 | 3000 | 2700 |

[3]Maximum Pressure Rating – Push Application.

View Table of Contents

## Head Rectangular Mounting
Style JJ
(NFPA Style ME5)

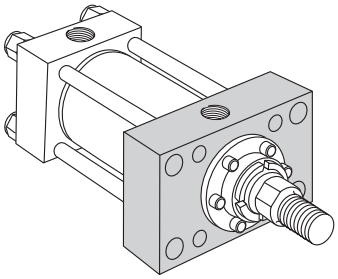

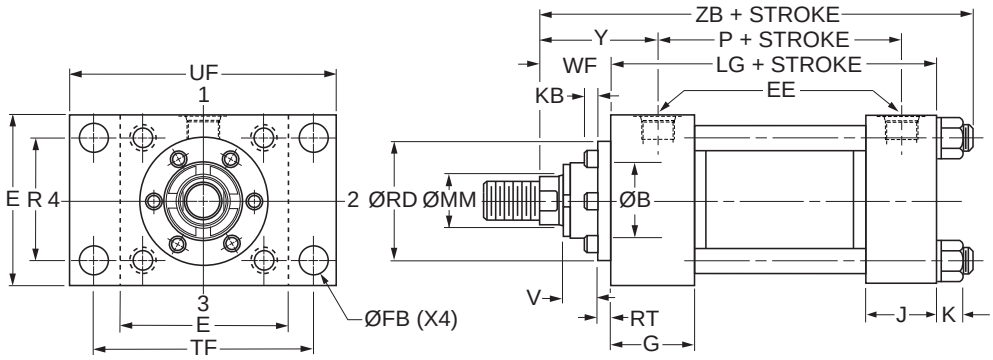




### Style JJ – Dimensional and Mounting Data

| Bore Ø | E | EE | | FB Ø | G | J | K Max. | R | TF | UF | Add Stroke | |
|---|---|---|---|---|---|---|---|---|---|---|---|---|
| | | NPTF[1] | SAE[2] | | | | | | | | LG | P |
| 1.50 | 2.50 | 1/2 | 10 | 0.44 | 1.75 | 1.50 | 0.42 | 1.63 | 3.44 | 4.25 | 4.63 | 2.88 |
| 2.00 | 3.00 | 1/2 | 10 | 0.56 | 1.75 | 1.50 | 0.57 | 2.05 | 4.13 | 5.13 | 4.63 | 2.88 |
| 2.50 | 3.50 | 1/2 | 10 | 0.56 | 1.75 | 1.50 | 0.57 | 2.55 | 4.63 | 5.63 | 4.75 | 3.00 |
| 3.25 | 4.50 | 3/4 | 12 | 0.69 | 2.00 | 1.75 | 0.68 | 3.25 | 5.88 | 7.13 | 5.50 | 3.50 |
| 4.00 | 5.00 | 3/4 | 12 | 0.69 | 2.00 | 1.75 | 0.68 | 3.82 | 6.38 | 7.63 | 5.75 | 3.75 |
| 5.00 | 6.50 | 3/4 | 12 | 0.94 | 2.00 | 1.75 | 0.94 | 4.95 | 8.19 | 9.75 | 6.25 | 4.25 |
| 6.00 | 7.50 | 1 | 16 | 1.06 | 2.25 | 2.25 | 1.05 | 5.73 | 9.44 | 11.25 | 7.38 | 4.88 |

[1]NPTF ports are available at no extra charge.
[2]SAE straight thread ports are standard and are indicated by port number.

### Style JJ – Dimensional and Mounting Data

| Bore Ø | Rod No. | MM Rod Ø | B Ø +.000 -.002 | KB | RD Ø | RT | V | WF | Y | Add Stroke ZB Max |
|---|---|---|---|---|---|---|---|---|---|---|
| 1.50 | 1 (std.) | 0.625 | 1.124 | 0 | 1.94 | 0.38 | 0.25 | 1.00 | 2.00 | 6.29 |
| | 2 | 1.000 | 1.499 | 0 | 2.38 | 0.38 | 0.50 | 1.38 | 2.38 | 6.67 |
| 2.00 | 1 (std.) | 1.000 | 1.499 | 0 | 2.38 | 0.38 | 0.50 | 1.38 | 2.38 | 6.81 |
| | 2 | 1.375 | 1.999 | 0.19 | 2.87 | 0.36 | 0.63 | 1.63 | 2.63 | 7.06 |
| 2.50 | 1 (std.) | 1.000 | 1.499 | 0 | 2.38 | 0.38 | 0.50 | 1.38 | 2.38 | 6.93 |
| | 2 | 1.750 | 2.374 | 0.19 | 3.47 | 0.38 | 0.75 | 1.88 | 2.88 | 7.43 |
| | 3 | 1.375 | 1.999 | 0.19 | 2.87 | 0.36 | 0.63 | 1.63 | 2.63 | 7.18 |
| 3.25 | 1 (std.) | 1.375 | 1.999 | 0.19 | 2.87 | 0.36 | 0.63 | 1.63 | 2.75 | 8.06 |
| | 2 | 2.000 | 2.624 | 0.13 | 3.72 | 0.63 | 0.50 | 2.00 | 3.13 | 8.43 |
| | 3 | 1.750 | 2.374 | 0.19 | 3.47 | 0.38 | 0.75 | 1.88 | 3.00 | 8.31 |
| 4.00 | 1 (std.) | 1.750 | 2.374 | 0.19 | 3.47 | 0.38 | 0.75 | 1.88 | 3.00 | 8.56 |
| | 2 | 2.500 | 3.124 | 0.25 | 4.25 | 0.60 | 0.63 | 2.25 | 3.38 | 8.94 |
| | 3 | 2.000 | 2.624 | 0.13 | 3.72 | 0.63 | 0.50 | 2.00 | 3.13 | 8.68 |
| 5.00 | 1 (std.) | 2.000 | 2.624 | 0.13 | 3.72 | 0.63 | 0.50 | 2.00 | 3.13 | 9.44 |
| | 2 | 3.500 | 4.249 | 0.25 | 5.76 | 0.63 | 0.63 | 2.25 | 3.38 | 9.69 |
| | 3 | 2.500 | 3.124 | 0.25 | 4.25 | 0.60 | 0.63 | 2.25 | 3.38 | 9.69 |
| | 4 | 3.000 | 3.749 | 0.22 | 5.26 | 0.63 | 0.63 | 2.25 | 3.38 | 9.69 |
| 6.00 | 1 (std.) | 2.500 | 3.124 | 0.25 | 4.25 | 0.60 | 0.63 | 2.25 | 3.50 | 10.93 |
| | 2 | 4.000 | 4.749 | 0.16 | 6.31 | 0.75 | 0.50 | 2.25 | 3.50 | 10.93 |
| | 3 | 3.000 | 3.749 | 0.22 | 5.26 | 0.63 | 0.63 | 2.25 | 3.50 | 10.93 |
| | 4 | 3.500 | 4.249 | 0.25 | 5.76 | 0.63 | 0.63 | 2.25 | 3.50 | 10.93 |

View Table of Contents



## Cap Rectangular Flange Mounting

Style H
(NFPA Style MF2)

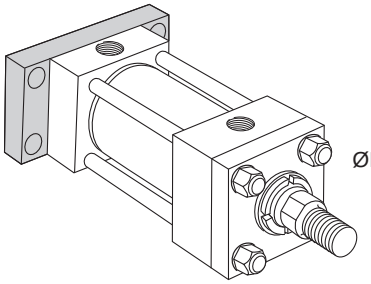

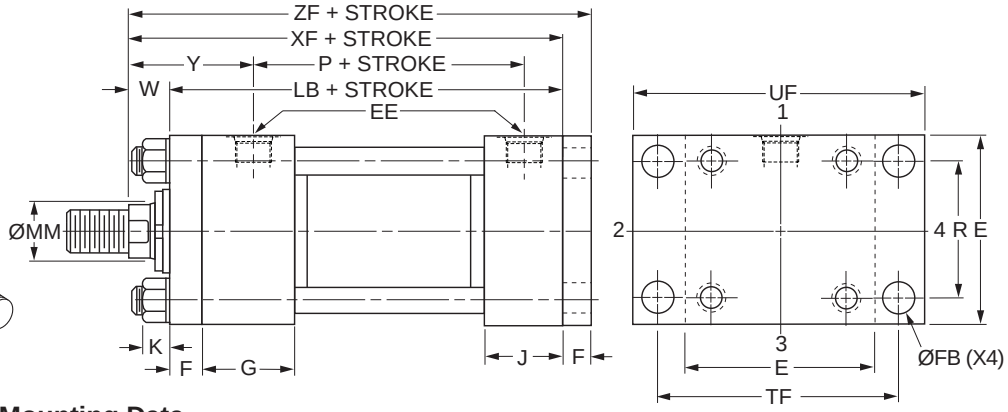


## Style H – Dimensional and Mounting Data

| Bore Ø | E | EE | | F | FB Ø | G | J | K Max. | R | TF | UF | Add Stroke | |
|---|---|---|---|---|---|---|---|---|---|---|---|---|---|
| | | NPTF[1] | SAE[2] | | | | | | | | | LB | P |
| 1.50 | 2.50 | 1/2 | 10 | 0.38 | 0.44 | 1.75 | 1.50 | 0.42 | 1.63 | 3.44 | 4.25 | 5.00 | 2.88 |
| 2.00 | 3.00 | 1/2 | 10 | 0.63 | 0.56 | 1.75 | 1.50 | 0.57 | 2.05 | 4.13 | 5.13 | 5.25 | 2.88 |
| 2.50 | 3.50 | 1/2 | 10 | 0.63 | 0.56 | 1.75 | 1.50 | 0.57 | 2.55 | 4.63 | 5.63 | 5.38 | 3.00 |
| 3.25 | 4.50 | 3/4 | 12 | 0.75 | 0.69 | 2.00 | 1.75 | 0.68 | 3.25 | 5.88 | 7.13 | 6.25 | 3.50 |
| 4.00 | 5.00 | 3/4 | 12 | 0.88 | 0.69 | 2.00 | 1.75 | 0.68 | 3.82 | 6.38 | 7.63 | 6.63 | 3.75 |
| 5.00 | 6.50 | 3/4 | 12 | 0.88 | 0.94 | 2.00 | 1.75 | 0.94 | 4.95 | 8.19 | 9.75 | 7.13 | 4.25 |
| 6.00 | 7.50 | 1 | 16 | 1.00 | 1.06 | 2.25 | 2.25 | 1.05 | 5.73 | 9.44 | 11.25 | 8.38 | 4.88 |

[1]NPTF ports are available at no extra charge.
[2]SAE straight thread ports are standard and are indicated by port number.

## Style H – Dimensional and Mounting Data

| Bore Ø | Rod No. | MM Rod Ø | W | Y | Add Stroke | |
|---|---|---|---|---|---|---|
| | | | | | XF | ZF |
| 1.50 | 1 (std.) | 0.625 | 0.63 | 2.00 | 5.63 | 6.00 |
| | 2 | 1.000 | 1.00 | 2.38 | 6.00 | 6.38 |
| 2.00 | 1 (std.) | 1.000 | 0.75 | 2.38 | 6.00 | 6.63 |
| | 2 | 1.375 | 1.00 | 2.63 | 6.25 | 6.88 |
| 2.50 | 1 (std.) | 1.000 | 0.75 | 2.38 | 6.13 | 6.75 |
| | 2 | 1.750 | 1.25 | 2.88 | 6.63 | 7.25 |
| | 3 | 1.375 | 1.00 | 2.63 | 6.38 | 7.00 |
| 3.25 | 1 (std.) | 1.375 | 0.88 | 2.75 | 7.13 | 7.88 |
| | 2 | 2.000 | 1.25 | 3.13 | 7.50 | 8.25 |
| | 3 | 1.750 | 1.13 | 3.00 | 7.38 | 8.13 |
| 4.00 | 1 (std.) | 1.750 | 1.00 | 3.00 | 7.63 | 8.50 |
| | 2 | 2.500 | 1.38 | 3.38 | 8.00 | 8.88 |
| | 3 | 2.000 | 1.13 | 3.13 | 7.75 | 8.63 |
| 5.00 | 1 (std.) | 2.000 | 1.13 | 3.13 | 8.25 | 9.13 |
| | 2 | 3.500 | 1.38 | 3.38 | 8.50 | 9.38 |
| | 3 | 2.500 | 1.38 | 3.38 | 8.50 | 9.38 |
| | 4 | 3.000 | 1.38 | 3.38 | 8.50 | 9.38 |
| 6.00 | 1 (std.) | 2.500 | 1.25 | 3.50 | 9.63 | 10.63 |
| | 2 | 4.000 | 1.25 | 3.50 | 9.63 | 10.63 |
| | 3 | 3.000 | 1.25 | 3.50 | 9.63 | 10.63 |
| | 4 | 3.500 | 1.25 | 3.50 | 9.63 | 10.63 |

## Style H – Maximum Operating Pressure / 2H

| Bore Ø | Maximum psi Pull[3] | | | |
|---|---|---|---|---|
| | Rod Code | | | |
| | 1 | 2 | 3 | 4 |
| 1.50 | 2500 | 3000 | - | - |
| 2.00 | 3000 | 3000 | - | - |
| 2.50 | 3000 | 3000 | 3000 | - |
| 3.25 | 3000 | 3000 | 3000 | - |
| 4.00 | 3000 | 3000 | 3000 | - |
| 5.00 | 2000 | 3000 | 2000 | 2500 |
| 6.00 | 1800 | 2500 | 2000 | 2000 |

[3] Maximum pressure rating — pull application.

View Table of Contents

## Cap Square Flange Mounting
Style HB
(NFPA Style MF6)

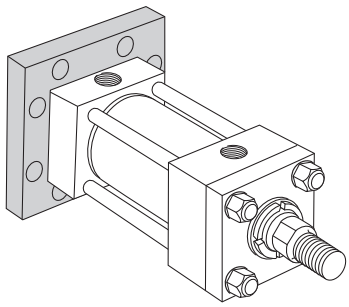

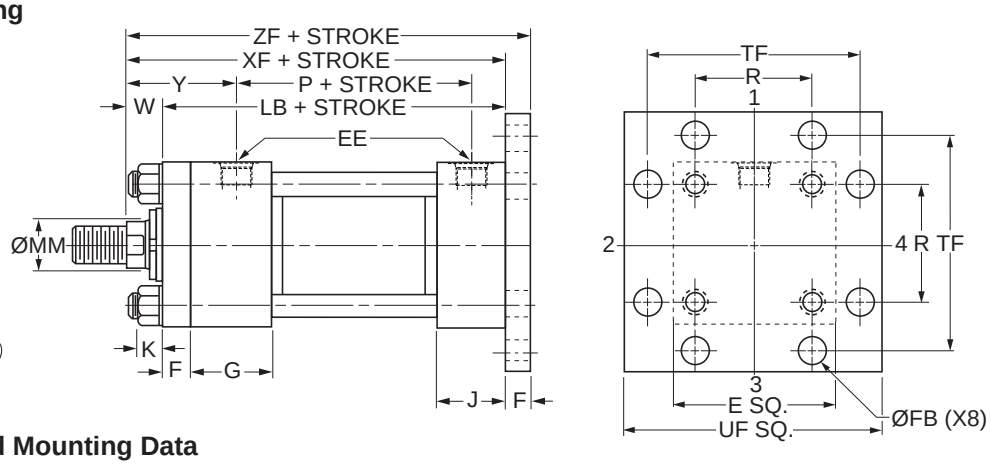


### Style HB – Dimensional and Mounting Data

| Bore Ø | E | EE | | F | FB Ø | G | J | K Max. | R | TF | UF | Add Stroke | |
|---|---|---|---|---|---|---|---|---|---|---|---|---|---|
| | | NPTF[1] | SAE[2] | | | | | | | | | LB | P |
| 1.50 | 2.50 | 1/2 | 10 | 0.38 | 0.44 | 1.75 | 1.50 | 0.42 | 1.63 | 3.44 | 4.25 | 5.00 | 2.88 |
| 2.00 | 3.00 | 1/2 | 10 | 0.63 | 0.56 | 1.75 | 1.50 | 0.57 | 2.05 | 4.13 | 5.13 | 5.25 | 2.88 |
| 2.50 | 3.50 | 1/2 | 10 | 0.63 | 0.56 | 1.75 | 1.50 | 0.57 | 2.55 | 4.63 | 5.63 | 5.38 | 3.00 |
| 3.25 | 4.50 | 3/4 | 12 | 0.75 | 0.69 | 2.00 | 1.75 | 0.68 | 3.25 | 5.88 | 7.13 | 6.25 | 3.50 |
| 4.00 | 5.00 | 3/4 | 12 | 0.88 | 0.69 | 2.00 | 1.75 | 0.68 | 3.82 | 6.38 | 7.63 | 6.63 | 3.75 |
| 5.00 | 6.50 | 3/4 | 12 | 0.88 | 0.94 | 2.00 | 1.75 | 0.94 | 4.95 | 8.19 | 9.75 | 7.13 | 4.25 |
| 6.00 | 7.50 | 1 | 16 | 1.00 | 1.06 | 2.25 | 2.25 | 1.05 | 5.73 | 9.44 | 11.25 | 8.38 | 4.88 |

[1]NPTF ports are available at no extra charge.
[2]SAE straight thread ports are standard and are indicated by port number.

### Style HB – Dimensional and Mounting Data

| Bore Ø | Rod No. | MM Rod Ø | W | Y | Add Stroke | |
|---|---|---|---|---|---|---|
| | | | | | XF | ZF |
| 1.50 | 1 (std.) | 0.625 | 0.63 | 2.00 | 5.63 | 6.00 |
| | 2 | 1.000 | 1.00 | 2.38 | 6.00 | 6.38 |
| 2.00 | 1 (std.) | 1.000 | 0.75 | 2.38 | 6.00 | 6.63 |
| | 2 | 1.375 | 1.00 | 2.63 | 6.25 | 6.88 |
| 2.50 | 1 (std.) | 1.000 | 0.75 | 2.38 | 6.13 | 6.75 |
| | 2 | 1.750 | 1.25 | 2.88 | 6.63 | 7.25 |
| | 3 | 1.375 | 1.00 | 2.63 | 6.38 | 7.00 |
| 3.25 | 1 (std.) | 1.375 | 0.88 | 2.75 | 7.13 | 7.88 |
| | 2 | 2.000 | 1.25 | 3.13 | 7.50 | 8.25 |
| | 3 | 1.750 | 1.13 | 3.00 | 7.38 | 8.13 |
| 4.00 | 1 (std.) | 1.750 | 1.00 | 3.00 | 7.63 | 8.50 |
| | 2 | 2.500 | 1.38 | 3.38 | 8.00 | 8.88 |
| | 3 | 2.000 | 1.13 | 3.13 | 7.75 | 8.63 |
| 5.00 | 1 (std.) | 2.000 | 1.13 | 3.13 | 8.25 | 9.13 |
| | 2 | 3.500 | 1.38 | 3.38 | 8.50 | 9.38 |
| | 3 | 2.500 | 1.38 | 3.38 | 8.50 | 9.38 |
| | 4 | 3.000 | 1.38 | 3.38 | 8.50 | 9.38 |
| 6.00 | 1 (std.) | 2.500 | 1.25 | 3.50 | 9.63 | 10.63 |
| | 2 | 4.000 | 1.25 | 3.50 | 9.63 | 10.63 |
| | 3 | 3.000 | 1.25 | 3.50 | 9.63 | 10.63 |
| | 4 | 3.500 | 1.25 | 3.50 | 9.63 | 10.63 |

View Table of Contents



## Cap Rectangular Flange Mounting
Style HH
(NFPA Style ME6)

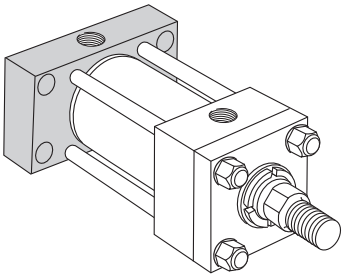

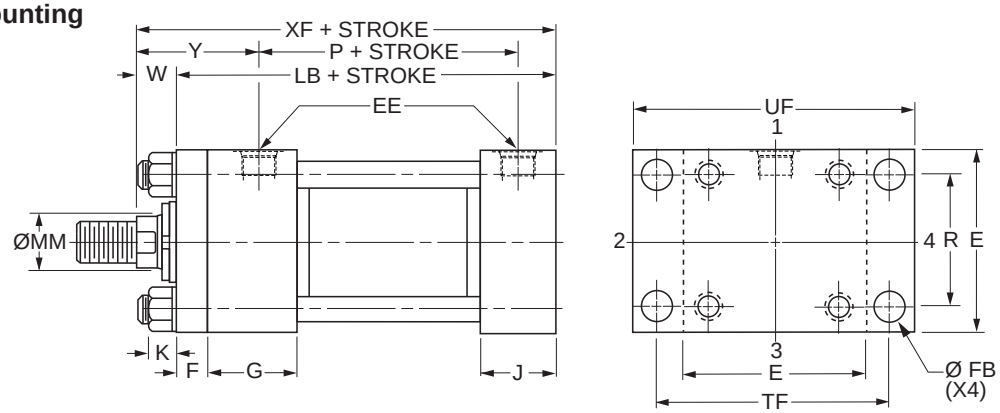


## Style HH – Dimensional and Mounting Data

| Bore Ø | E | EE | | F | FB Ø | G | J | K Max. | R | TF | UF | Add Stroke | |
|---|---|---|---|---|---|---|---|---|---|---|---|---|---|
| | | NPTF[1] | SAE[2] | | | | | | | | | LB | P |
| 1.50 | 2.50 | 1/2 | 10 | 0.38 | 0.44 | 1.75 | 1.50 | 0.42 | 1.63 | 3.44 | 4.25 | 5.00 | 2.88 |
| 2.00 | 3.00 | 1/2 | 10 | 0.63 | 0.56 | 1.75 | 1.50 | 0.57 | 2.05 | 4.13 | 5.13 | 5.25 | 2.88 |
| 2.50 | 3.50 | 1/2 | 10 | 0.63 | 0.56 | 1.75 | 1.50 | 0.57 | 2.55 | 4.63 | 5.63 | 5.38 | 3.00 |
| 3.25 | 4.50 | 3/4 | 12 | 0.75 | 0.69 | 2.00 | 1.75 | 0.68 | 3.25 | 5.88 | 7.13 | 6.25 | 3.50 |
| 4.00 | 5.00 | 3/4 | 12 | 0.88 | 0.69 | 2.00 | 1.75 | 0.68 | 3.82 | 6.38 | 7.63 | 6.63 | 3.75 |
| 5.00 | 6.50 | 3/4 | 12 | 0.88 | 0.94 | 2.00 | 1.75 | 0.94 | 4.95 | 8.19 | 9.75 | 7.13 | 4.25 |
| 6.00 | 7.50 | 1 | 16 | 1.00 | 1.06 | 2.25 | 2.25 | 1.05 | 5.73 | 9.44 | 11.25 | 8.38 | 4.88 |

[1]NPTF ports are available at no extra charge.
[2]SAE straight thread ports are standard and are indicated by port number.

## Style HH – Dimensional and Mounting Data

| Bore Ø | Rod No. | MM Rod Ø | W | Y | Add Stroke |
|---|---|---|---|---|---|
| | | | | | XF |
| 1.50 | 1 (std.) | 0.625 | 0.63 | 2.00 | 5.63 |
| | 2 | 1.000 | 1.00 | 2.38 | 6.00 |
| 2.00 | 1 (std.) | 1.000 | 0.75 | 2.38 | 6.00 |
| | 2 | 1.375 | 1.00 | 2.63 | 6.25 |
| 2.50 | 1 (std.) | 1.000 | 0.75 | 2.38 | 6.13 |
| | 2 | 1.750 | 1.25 | 2.88 | 6.63 |
| | 3 | 1.375 | 1.00 | 2.63 | 6.38 |
| 3.25 | 1 (std.) | 1.375 | 0.88 | 2.75 | 7.13 |
| | 2 | 2.000 | 1.25 | 3.13 | 7.50 |
| | 3 | 1.750 | 1.13 | 3.00 | 7.38 |
| 4.00 | 1 (std.) | 1.750 | 1.00 | 3.00 | 7.63 |
| | 2 | 2.500 | 1.38 | 3.38 | 8.00 |
| | 3 | 2.000 | 1.13 | 3.13 | 7.75 |
| 5.00 | 1 (std.) | 2.000 | 1.13 | 3.13 | 8.25 |
| | 2 | 3.500 | 1.38 | 3.38 | 8.50 |
| | 3 | 2.500 | 1.38 | 3.38 | 8.50 |
| | 4 | 3.000 | 1.38 | 3.38 | 8.50 |
| 6.00 | 1 (std.) | 2.500 | 1.25 | 3.50 | 9.63 |
| | 2 | 4.000 | 1.25 | 3.50 | 9.63 |
| | 3 | 3.000 | 1.25 | 3.50 | 9.63 |
| | 4 | 3.500 | 1.25 | 3.50 | 9.63 |

View Table of Contents

## Side Lug Mounting
Style C
(NFPA Style MS2)

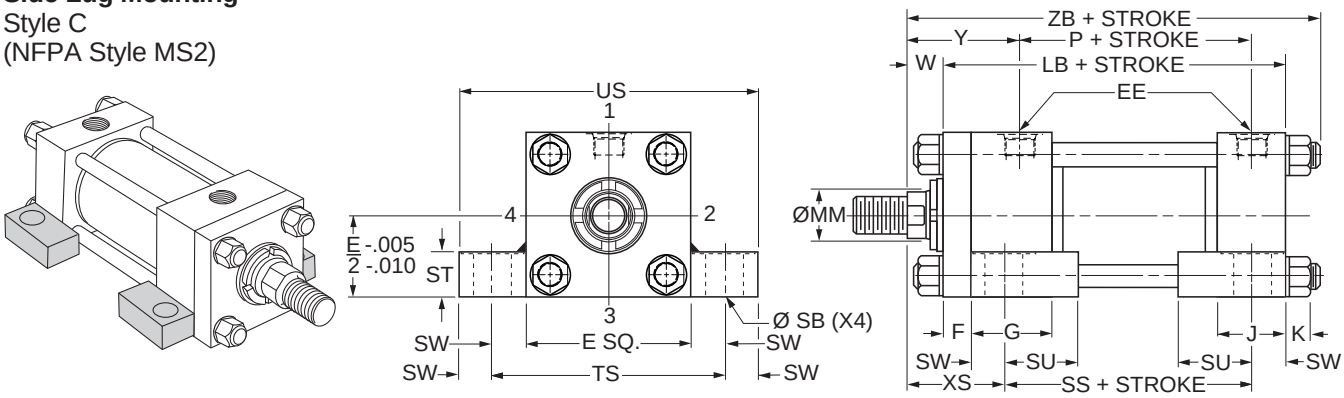


### Style C – Dimensional and Mounting Data

| Bore Ø | E | EE | | F | G | J | K Max. | SB[3] Ø | ST | SU | SW | TS | US | Add Stroke | | |
|---|---|---|---|---|---|---|---|---|---|---|---|---|---|---|---|---|
| | | NPTF[1] | SAE[2] | | | | | | | | | | | LB | P | SS |
| 1.50 | 2.50 | 1/2 | 10 | 0.38 | 1.75 | 1.50 | 0.42 | 0.44 | 0.50 | 0.94 | 0.38 | 3.25 | 4.00 | 5.00 | 2.88 | 3.88 |
| 2.00 | 3.00 | 1/2 | 10 | 0.63 | 1.75 | 1.50 | 0.57 | 0.56 | 0.75 | 1.25 | 0.50 | 4.00 | 5.00 | 5.25 | 2.88 | 3.63 |
| 2.50 | 3.50 | 1/2 | 10 | 0.63 | 1.75 | 1.50 | 0.57 | 0.81 | 1.00 | 1.56 | 0.69 | 4.88 | 6.25 | 5.38 | 3.00 | 3.38 |
| 3.25 | 4.50 | 3/4 | 12 | 0.75 | 2.00 | 1.75 | 0.68 | 0.81 | 1.00 | 1.56 | 0.69 | 5.88 | 7.25 | 6.25 | 3.50 | 4.13 |
| 4.00 | 5.00 | 3/4 | 12 | 0.88 | 2.00 | 1.75 | 0.68 | 1.06 | 1.25 | 2.00 | 0.88 | 6.75 | 8.50 | 6.63 | 3.75 | 4.00 |
| 5.00 | 6.50 | 3/4 | 12 | 0.88 | 2.00 | 1.75 | 0.94 | 1.06 | 1.25 | 2.00 | 0.88 | 8.25 | 10.00 | 7.13 | 4.25 | 4.50 |
| 6.00 | 7.50 | 1 | 16 | 1.00 | 2.25 | 2.25 | 1.05 | 1.31 | 1.50 | 2.50 | 1.13 | 9.75 | 12.00 | 8.38 | 4.88 | 5.13 |

[1]NPTF ports are available at no extra charge.
[2]SAE straight thread ports are standard and are indicated by port number.
[3]Upper surface spot faced for socket head screws.

### Style C – Dimensional and Mounting Data

| Bore Ø | Rod No. | MM Rod Ø | W | XS | Y | Add Stroke |
|---|---|---|---|---|---|---|
| | | | | | | ZB Max. |
| 1.50 | 1 (std.) | 0.625 | 0.63 | 1.38 | 2.00 | 6.29 |
| | 2 | 1.000 | 1.00 | 1.75 | 2.38 | 6.67 |
| 2.00 | 1 (std.) | 1.000 | 0.75 | 1.88 | 2.38 | 6.81 |
| | 2 | 1.375 | 1.00 | 2.13 | 2.63 | 7.06 |
| 2.50 | 1 (std.) | 1.000 | 0.75 | 2.06 | 2.38 | 6.93 |
| | 2 | 1.750 | 1.25 | 2.56 | 2.88 | 7.43 |
| | 3 | 1.375 | 1.00 | 2.31 | 2.63 | 7.18 |
| 3.25 | 1 (std.) | 1.375 | 0.88 | 2.31 | 2.75 | 8.06 |
| | 2 | 2.000 | 1.25 | 2.69 | 3.13 | 8.43 |
| | 3 | 1.750 | 1.13 | 2.56 | 3.00 | 8.31 |
| 4.00 | 1 (std.) | 1.750 | 1.00 | 2.75 | 3.00 | 8.56 |
| | 2 | 2.500 | 1.38 | 3.13 | 3.38 | 8.94 |
| | 3 | 2.000 | 1.13 | 2.88 | 3.13 | 8.68 |
| 5.00 | 1 (std.) | 2.000 | 1.13 | 2.88 | 3.13 | 9.44 |
| | 2 | 3.500 | 1.38 | 3.13 | 3.38 | 9.69 |
| | 3 | 2.500 | 1.38 | 3.13 | 3.38 | 9.69 |
| | 4 | 3.000 | 1.38 | 3.13 | 3.38 | 9.69 |
| 6.00 | 1 (std.) | 2.500 | 1.25 | 3.38 | 3.50 | 10.93 |
| | 2 | 4.000 | 1.25 | 3.38 | 3.50 | 10.93 |
| | 3 | 3.000 | 1.25 | 3.38 | 3.50 | 10.93 |
| | 4 | 3.500 | 1.25 | 3.38 | 3.50 | 10.93 |

View Table of Contents



## Side Tapped Mounting
Style F
(NFPA Style MS4)

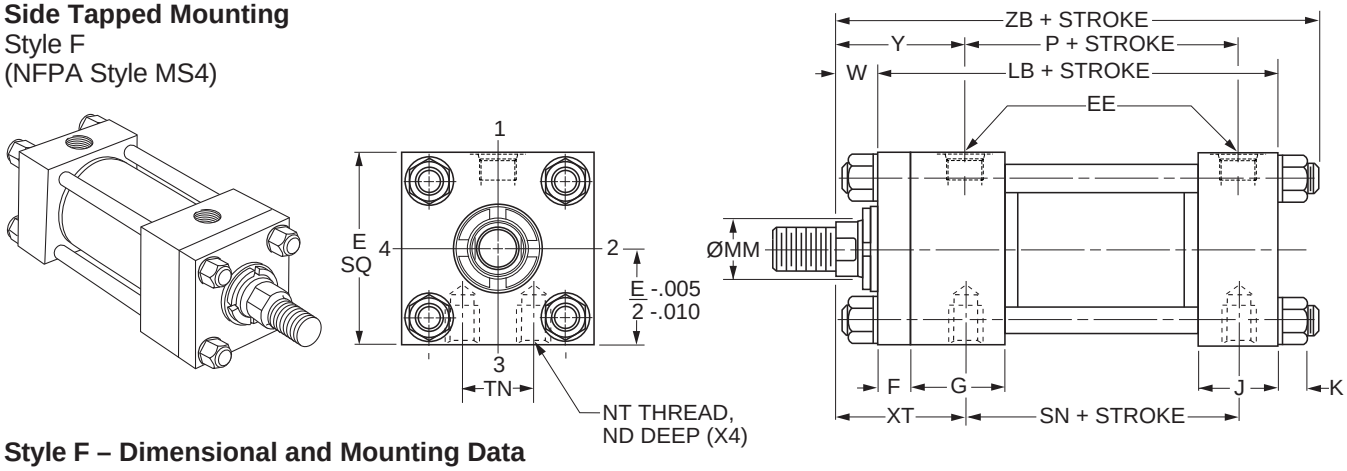


### Style F – Dimensional and Mounting Data

| Bore Ø | E | EE | | F | G | J | K Max. | ND | NT | TN | Add Stroke | | |
|---|---|---|---|---|---|---|---|---|---|---|---|---|---|
| | | NPTF[1] | SAE[2] | | | | | | | | LB | P | SN |
| 1.50 | 2.50 | 1/2 | 10 | 0.38 | 1.75 | 1.50 | 0.42 | 0.38 | 3/8-16 | 0.75 | 5.00 | 2.88 | 2.88 |
| 2.00 | 3.00 | 1/2 | 10 | 0.63 | 1.75 | 1.50 | 0.57 | 0.44 | 1/2-13 | 0.94 | 5.25 | 2.88 | 2.88 |
| 2.50 | 3.50 | 1/2 | 10 | 0.63 | 1.75 | 1.50 | 0.57 | 0.50 | 5/8-11 | 1.31 | 5.38 | 3.00 | 3.00 |
| 3.25 | 4.50 | 3/4 | 12 | 0.75 | 2.00 | 1.75 | 0.68 | 0.69 | 3/4-10 | 1.50 | 6.25 | 3.50 | 3.50 |
| 4.00 | 5.00 | 3/4 | 12 | 0.88 | 2.00 | 1.75 | 0.68 | 0.69 | 1-8 | 2.06 | 6.63 | 3.75 | 3.75 |
| 5.00 | 6.50 | 3/4 | 12 | 0.88 | 2.00 | 1.75 | 0.94 | 1.00 | 1-8 | 2.94 | 7.13 | 4.25 | 4.25 |
| 6.00 | 7.50 | 1 | 16 | 1.00 | 2.25 | 2.25 | 1.05 | 1.25 | 1 1/4 -7 | 3.31 | 8.38 | 4.88 | 5.13 |

[1]NPTF ports are available at no extra charge.
[2]SAE straight thread ports are standard and are indicated by port number.

### Style F – Dimensional and Mounting Data

| Bore Ø | Rod No. | MM Rod Ø | W | XT | Y | Add Stroke |
|---|---|---|---|---|---|---|
| | | | | | | ZB Max. |
| 1.50 | 1 (std.) | 0.625 | 0.63 | 2.00 | 2.00 | 6.29 |
| | 2 | 1.000 | 1.00 | 2.38 | 2.38 | 6.67 |
| 2.00 | 1 (std.) | 1.000 | 0.75 | 2.38 | 2.38 | 6.81 |
| | 2 | 1.375 | 1.00 | 2.63 | 2.63 | 7.06 |
| 2.50 | 1 (std.) | 1.000 | 0.75 | 2.38 | 2.38 | 6.93 |
| | 2 | 1.750 | 1.25 | 2.88 | 2.88 | 7.43 |
| | 3 | 1.375 | 1.00 | 2.63 | 2.63 | 7.18 |
| 3.25 | 1 (std.) | 1.375 | 0.88 | 2.75 | 2.75 | 8.06 |
| | 2 | 2.000 | 1.25 | 3.13 | 3.13 | 8.43 |
| | 3 | 1.750 | 1.13 | 3.00 | 3.00 | 8.31 |
| 4.00 | 1 (std.) | 1.750 | 1.00 | 3.00 | 3.00 | 8.56 |
| | 2 | 2.500 | 1.38 | 3.38 | 3.38 | 8.94 |
| | 3 | 2.000 | 1.13 | 3.13 | 3.13 | 8.68 |
| 5.00 | 1 (std.) | 2.000 | 1.13 | 3.13 | 3.13 | 9.44 |
| | 2 | 3.500 | 1.38 | 3.38 | 3.38 | 9.69 |
| | 3 | 2.500 | 1.38 | 3.38 | 3.38 | 9.69 |
| | 4 | 3.000 | 1.38 | 3.38 | 3.38 | 9.69 |
| 6.00 | 1 (std.) | 2.500 | 1.25 | 3.50 | 3.50 | 10.93 |
| | 2 | 4.000 | 1.25 | 3.50 | 3.50 | 10.93 |
| | 3 | 3.000 | 1.25 | 3.50 | 3.50 | 10.93 |
| | 4 | 3.500 | 1.25 | 3.50 | 3.50 | 10.93 |

View Table of Contents

## Cap Fixed Clevis Mounting
Style BB
(NFPA Style MP1)

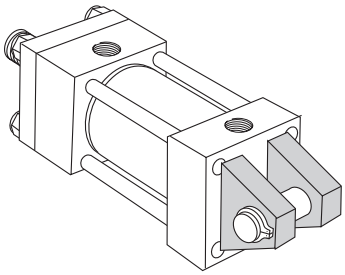

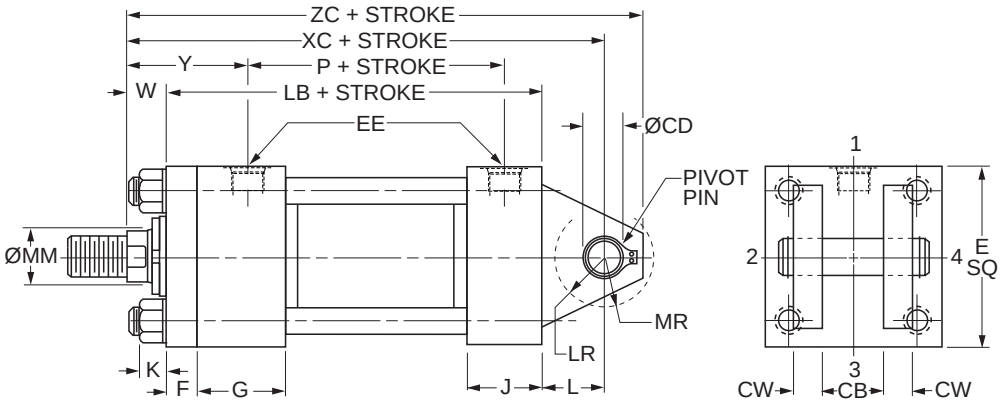


### Style BB – Dimensional and Mounting Data

| Bore Ø | E | EE | | CB | CD[3] Ø +.000 -.002 | CW | F | G | J | K Max. | L | LR | MR | Add Stroke | |
|---|---|---|---|---|---|---|---|---|---|---|---|---|---|---|---|
| | | NPTF[1] | SAE[2] | | | | | | | | | | | LB | P |
| 1.50 | 2.50 | 1/2 | 10 | 0.75 | .501 | 0.50 | 0.38 | 1.75 | 1.50 | 0.42 | 0.75 | 0.56 | 0.63 | 5.00 | 2.88 |
| 2.00 | 3.00 | 1/2 | 10 | 1.25 | .751 | 0.63 | 0.63 | 1.75 | 1.50 | 0.57 | 1.25 | 1.00 | 0.94 | 5.25 | 2.88 |
| 2.50 | 3.50 | 1/2 | 10 | 1.25 | .751 | 0.63 | 0.63 | 1.75 | 1.50 | 0.57 | 1.25 | 0.94 | 0.94 | 5.38 | 3.00 |
| 3.25 | 4.50 | 3/4 | 12 | 1.50 | 1.001 | 0.75 | 0.75 | 2.00 | 1.75 | 0.68 | 1.50 | 1.25 | 1.19 | 6.25 | 3.50 |
| 4.00 | 5.00 | 3/4 | 12 | 2.00 | 1.376 | 1.00 | 0.88 | 2.00 | 1.75 | 0.68 | 2.13 | 1.75 | 1.63 | 6.63 | 3.75 |
| 5.00 | 6.50 | 3/4 | 12 | 2.50 | 1.751 | 1.25 | 0.88 | 2.00 | 1.75 | 0.94 | 2.25 | 2.06 | 2.13 | 7.13 | 4.25 |
| 6.00 | 7.50 | 1 | 16 | 2.50 | 2.001 | 1.25 | 1.00 | 2.25 | 2.25 | 1.05 | 2.50 | 2.31 | 2.38 | 8.38 | 4.88 |

[1]NPTF ports are available at no extra charge.
[2]SAE straight thread ports are standard and are indicated by port number.
[3]Diameter CD is Pin Diameter.

### Style BB – Dimensional and Mounting Data

| Bore Ø | Rod No. | MM Rod Ø | W | Y | Add Stroke | |
|---|---|---|---|---|---|---|
| | | | | | XC | ZC |
| 1.50 | 1 (std.) | 0.625 | 0.63 | 2.00 | 6.38 | 6.88 |
| | 2 | 1.000 | 1.00 | 2.38 | 6.75 | 7.25 |
| 2.00 | 1 (std.) | 1.000 | 0.75 | 2.38 | 7.25 | 8.00 |
| | 2 | 1.375 | 1.00 | 2.63 | 7.50 | 8.25 |
| 2.50 | 1 (std.) | 1.000 | 0.75 | 2.38 | 7.38 | 8.13 |
| | 2 | 1.750 | 1.25 | 2.88 | 7.88 | 8.63 |
| | 3 | 1.375 | 1.00 | 2.63 | 7.63 | 8.38 |
| 3.25 | 1 (std.) | 1.375 | 0.88 | 2.75 | 8.63 | 9.63 |
| | 2 | 2.000 | 1.25 | 3.13 | 9.00 | 10.00 |
| | 3 | 1.750 | 1.13 | 3.00 | 8.88 | 9.88 |
| 4.00 | 1 (std.) | 1.750 | 1.00 | 3.00 | 9.75 | 11.13 |
| | 2 | 2.500 | 1.38 | 3.38 | 10.13 | 11.50 |
| | 3 | 2.000 | 1.13 | 3.13 | 9.88 | 11.25 |
| 5.00 | 1 (std.) | 2.000 | 1.13 | 3.13 | 10.50 | 12.25 |
| | 2 | 3.500 | 1.38 | 3.38 | 10.75 | 12.50 |
| | 3 | 2.500 | 1.38 | 3.38 | 10.75 | 12.50 |
| | 4 | 3.000 | 1.38 | 3.38 | 10.75 | 12.50 |
| 6.00 | 1 (std.) | 2.500 | 1.25 | 3.50 | 12.13 | 14.13 |
| | 2 | 4.000 | 1.25 | 3.50 | 12.13 | 14.13 |
| | 3 | 3.000 | 1.25 | 3.50 | 12.13 | 14.13 |
| | 4 | 3.500 | 1.25 | 3.50 | 12.13 | 14.13 |

View Table of Contents



## Head Trunnion Mounting
Style D
(NFPA Style MT1)

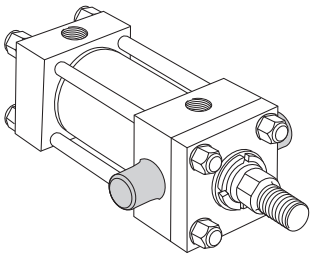

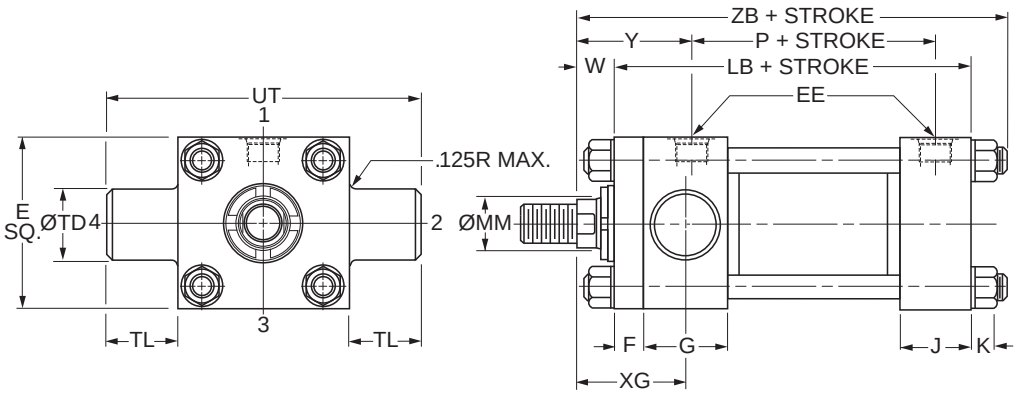


### Style D – Dimensional and Mounting Data

| Bore Ø | E | EE | | F | G | J | K Max. | TD Ø +.000 -.001 | TL | UT | Add Stroke | |
|---|---|---|---|---|---|---|---|---|---|---|---|---|
| | | NPTF[1] | SAE[2] | | | | | | | | LB | P |
| 1.50 | 2.50 | 1/2 | 10 | 0.38 | 1.75 | 1.50 | 0.42 | 1.000 | 1.00 | 4.50 | 5.00 | 2.88 |
| 2.00 | 3.00 | 1/2 | 10 | 0.63 | 1.75 | 1.50 | 0.57 | 1.375 | 1.38 | 5.75 | 5.25 | 2.88 |
| 2.50 | 3.50 | 1/2 | 10 | 0.63 | 1.75 | 1.50 | 0.57 | 1.375 | 1.38 | 6.25 | 5.38 | 3.00 |
| 3.25 | 4.50 | 3/4 | 12 | 0.75 | 2.00 | 1.75 | 0.68 | 1.750 | 1.75 | 8.00 | 6.25 | 3.50 |
| 4.00 | 5.00 | 3/4 | 12 | 0.88 | 2.00 | 1.75 | 0.68 | 1.750 | 1.75 | 8.50 | 6.63 | 3.75 |
| 5.00 | 6.50 | 3/4 | 12 | 0.88 | 2.00 | 1.75 | 0.94 | 1.750 | 1.75 | 10.00 | 7.13 | 4.25 |
| 6.00 | 7.50 | 1 | 16 | 1.00 | 2.25 | 2.25 | 1.05 | 2.000 | 2.00 | 11.50 | 8.38 | 4.88 |

[1]NPTF ports are available at no extra charge.
[2]SAE straight thread ports are standard and are indicated by port number.

### Style D – Dimensional and Mounting Data

| Bore Ø | Rod No. | MM Rod Ø | W | XG | Y | Add Stroke ZB Max. |
|---|---|---|---|---|---|---|
| 1.50 | 1 (std.) | 0.625 | 0.63 | 1.88 | 2.00 | 6.29 |
| | 2 | 1.000 | 1.00 | 2.25 | 2.38 | 6.67 |
| 2.00 | 1 (std.) | 1.000 | 0.75 | 2.25 | 2.38 | 6.81 |
| | 2 | 1.375 | 1.00 | 2.50 | 2.63 | 7.06 |
| 2.50 | 1 (std.) | 1.000 | 0.75 | 2.25 | 2.38 | 6.93 |
| | 2 | 1.750 | 1.25 | 2.75 | 2.88 | 7.43 |
| | 3 | 1.375 | 1.00 | 2.50 | 2.63 | 7.18 |
| 3.25 | 1 (std.) | 1.375 | 0.88 | 2.63 | 2.75 | 8.06 |
| | 2 | 2.000 | 1.25 | 3.00 | 3.13 | 8.43 |
| | 3 | 1.750 | 1.13 | 2.88 | 3.00 | 8.31 |
| 4.00 | 1 (std.) | 1.750 | 1.00 | 2.88 | 3.00 | 8.56 |
| | 2 | 2.500 | 1.38 | 3.25 | 3.38 | 8.94 |
| | 3 | 2.000 | 1.13 | 3.00 | 3.13 | 8.68 |
| 5.00 | 1 (std.) | 2.000 | 1.13 | 3.00 | 3.13 | 9.44 |
| | 2 | 3.500 | 1.38 | 3.25 | 3.38 | 9.69 |
| | 3 | 2.500 | 1.38 | 3.25 | 3.38 | 9.69 |
| | 4 | 3.000 | 1.38 | 3.25 | 3.38 | 9.69 |
| 6.00 | 1 (std.) | 2.500 | 1.25 | 3.38 | 3.50 | 10.93 |
| | 2 | 4.000 | 1.25 | 3.38 | 3.50 | 10.93 |
| | 3 | 3.000 | 1.25 | 3.38 | 3.50 | 10.93 |
| | 4 | 3.500 | 1.25 | 3.38 | 3.50 | 10.93 |

View Table of Contents

## Cap Trunnion Mounting
Style DB
(NFPA Style MT2)

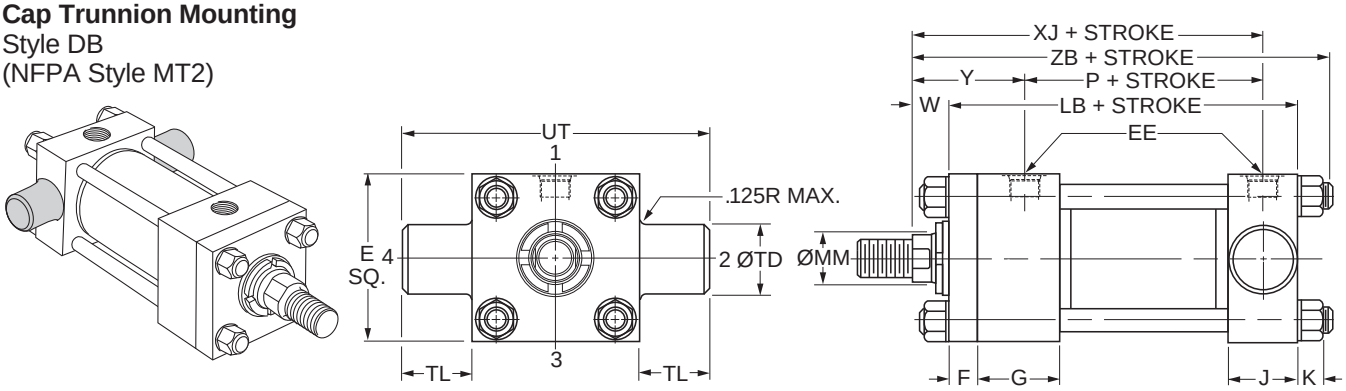


### Style DB – Dimensional and Mounting Data

| Bore Ø | E | EE | | F | G | J | K Max. | TD Ø +.000 -.001 | TL | UT | Add Stroke | |
|---|---|---|---|---|---|---|---|---|---|---|---|---|
| | | NPTF[1] | SAE[2] | | | | | | | | LB | P |
| 1.50 | 2.50 | 1/2 | 10 | 0.38 | 1.75 | 1.50 | 0.42 | 1.000 | 1.00 | 4.50 | 5.00 | 2.88 |
| 2.00 | 3.00 | 1/2 | 10 | 0.63 | 1.75 | 1.50 | 0.57 | 1.375 | 1.38 | 5.75 | 5.25 | 2.88 |
| 2.50 | 3.50 | 1/2 | 10 | 0.63 | 1.75 | 1.50 | 0.57 | 1.375 | 1.38 | 6.25 | 5.38 | 3.00 |
| 3.25 | 4.50 | 3/4 | 12 | 0.75 | 2.00 | 1.75 | 0.68 | 1.750 | 1.75 | 8.00 | 6.25 | 3.50 |
| 4.00 | 5.00 | 3/4 | 12 | 0.88 | 2.00 | 1.75 | 0.68 | 1.750 | 1.75 | 8.50 | 6.63 | 3.75 |
| 5.00 | 6.50 | 3/4 | 12 | 0.88 | 2.00 | 1.75 | 0.94 | 1.750 | 1.75 | 10.00 | 7.13 | 4.25 |
| 6.00 | 7.50 | 1 | 16 | 1.00 | 2.25 | 2.25 | 1.05 | 2.000 | 2.00 | 11.50 | 8.38 | 4.88 |

[1]NPTF ports are available at no extra charge.
[2]SAE straight thread ports are standard and are indicated by port number.

### Style DB – Dimensional and Mounting Data

| Bore Ø | Rod No. | MM Rod Ø | W | Y | Add Stroke | |
|---|---|---|---|---|---|---|
| | | | | | XJ | ZB Max. |
| 1.50 | 1 (std.) | 0.625 | 0.63 | 2.00 | 4.88 | 6.29 |
| | 2 | 1.000 | 1.00 | 2.38 | 5.25 | 6.67 |
| 2.00 | 1 (std.) | 1.000 | 0.75 | 2.38 | 5.25 | 6.81 |
| | 2 | 1.375 | 1.00 | 2.63 | 5.50 | 7.06 |
| 2.50 | 1 (std.) | 1.000 | 0.75 | 2.38 | 5.38 | 6.93 |
| | 2 | 1.750 | 1.25 | 2.88 | 5.88 | 7.43 |
| | 3 | 1.375 | 1.00 | 2.63 | 5.63 | 7.18 |
| 3.25 | 1 (std.) | 1.375 | 0.88 | 2.75 | 6.25 | 8.06 |
| | 2 | 2.000 | 1.25 | 3.13 | 6.63 | 8.43 |
| | 3 | 1.750 | 1.13 | 3.00 | 6.50 | 8.31 |
| 4.00 | 1 (std.) | 1.750 | 1.00 | 3.00 | 6.75 | 8.56 |
| | 2 | 2.500 | 1.38 | 3.38 | 7.13 | 8.94 |
| | 3 | 2.000 | 1.13 | 3.13 | 6.88 | 8.68 |
| 5.00 | 1 (std.) | 2.000 | 1.13 | 3.13 | 7.38 | 9.44 |
| | 2 | 3.500 | 1.38 | 3.38 | 7.63 | 9.69 |
| | 3 | 2.500 | 1.38 | 3.38 | 7.63 | 9.69 |
| | 4 | 3.000 | 1.38 | 3.38 | 7.63 | 9.69 |
| 6.00 | 1 (std.) | 2.500 | 1.25 | 3.50 | 8.38 | 10.93 |
| | 2 | 4.000 | 1.25 | 3.50 | 8.38 | 10.93 |
| | 3 | 3.000 | 1.25 | 3.50 | 8.38 | 10.93 |
| | 4 | 3.500 | 1.25 | 3.50 | 8.38 | 10.93 |

View Table of Contents



## Intermediate Fixed Trunnion Mounting

Style DD
(NFPA Style MT4)

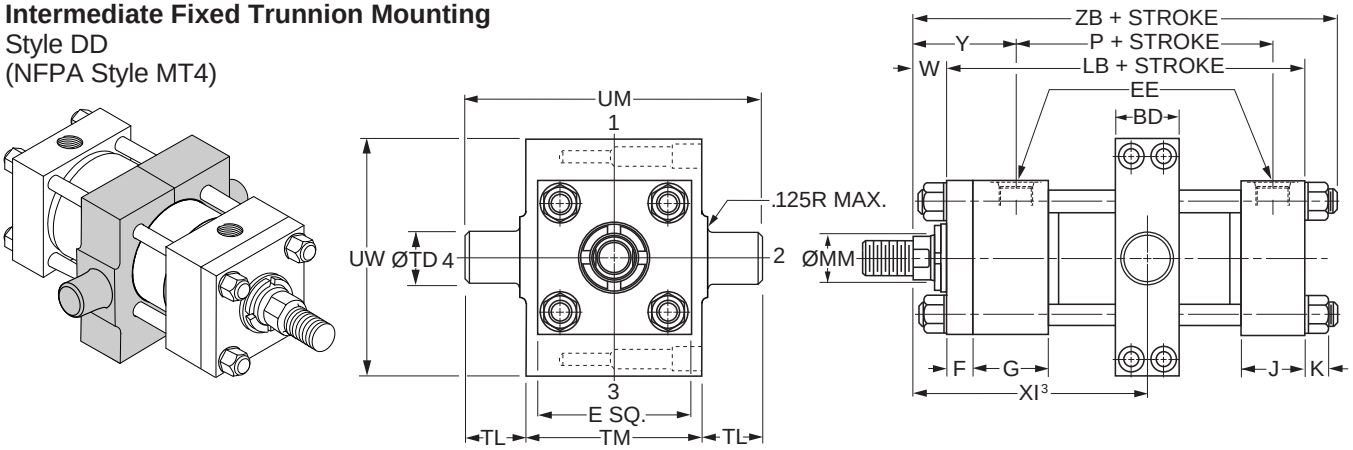


### Style DD – Dimensional and Mounting Data

| Bore Ø | BD | E | EE | | F | G | J | K Max. | TD Ø +.000 -.001 | TL | TM | UM | UW | Add Stroke | |
|---|---|---|---|---|---|---|---|---|---|---|---|---|---|---|---|
| | | | NPTF[1] | SAE[2] | | | | | | | | | | LB | P |
| 1.50 | 1.25 | 2.50 | 1/2 | 10 | 0.38 | 1.75 | 1.50 | 0.42 | 1.000 | 1.00 | 3.00 | 5.00 | 3.38 | 5.00 | 2.88 |
| 2.00 | 1.50 | 3.00 | 1/2 | 10 | 0.63 | 1.75 | 1.50 | 0.57 | 1.375 | 1.38 | 3.50 | 6.25 | 4.13 | 5.25 | 2.88 |
| 2.50 | 1.50 | 3.50 | 1/2 | 10 | 0.63 | 1.75 | 1.50 | 0.57 | 1.375 | 1.38 | 4.00 | 6.75 | 4.63 | 5.38 | 3.00 |
| 3.25 | 2.00 | 4.50 | 3/4 | 12 | 0.75 | 2.00 | 1.75 | 0.68 | 1.750 | 1.75 | 5.00 | 8.50 | 5.81 | 6.25 | 3.50 |
| 4.00 | 2.00 | 5.00 | 3/4 | 12 | 0.88 | 2.00 | 1.75 | 0.68 | 1.750 | 1.75 | 5.50 | 9.00 | 6.38 | 6.63 | 3.75 |
| 5.00 | 2.00 | 6.50 | 3/4 | 12 | 0.88 | 2.00 | 1.75 | 0.94 | 1.750 | 1.75 | 7.00 | 10.50 | 7.75 | 7.13 | 4.25 |
| 6.00 | 3.00 | 7.50 | 1 | 16 | 1.00 | 2.25 | 2.25 | 1.05 | 2.000 | 2.00 | 8.50 | 12.50 | 10.38 | 8.38 | 4.88 |

[1]NPTF ports are available at no extra charge.
[2]SAE straight thread ports are standard and are indicated by port number.

### Style DD – Dimensional and Mounting Data

| Bore Ø | Rod No. | MM Rod Ø | W | Y | Minimum XI[3] | | Style DD Min. Stroke | Add Stroke | | ZB Max |
|---|---|---|---|---|---|---|---|---|---|---|
| | | | | | Styles 4, 8 & 9 | Style 55 | | Maximum XI[4] | | |
| | | | | | | | | Styles 4, 8 & 9 | Style 55 | |
| 1.50 | 1 (std.) | 0.625 | 0.63 | 2.00 | 3.44 | 4.19 | 0 | 3.44 | 4.19 | 6.29 |
| | 2 | 1.000 | 1.00 | 2.38 | 3.81 | 4.81 | 0 | 3.81 | 4.81 | 6.67 |
| 2.00 | 1 (std.) | 1.000 | 0.75 | 2.38 | 3.94 | 4.94 | 0.25 | 3.69 | 4.69 | 6.81 |
| | 2 | 1.375 | 1.00 | 2.63 | 4.19 | 5.31 | 0.25 | 3.94 | 5.06 | 7.06 |
| 2.50 | 1 (std.) | 1.000 | 0.75 | 2.38 | 3.94 | 4.94 | 0.13 | 3.81 | 4.81 | 6.93 |
| | 2 | 1.750 | 1.25 | 2.88 | 4.44 | 5.69 | 0.13 | 4.31 | 5.56 | 7.43 |
| | 3 | 1.375 | 1.00 | 2.63 | 4.19 | 5.31 | 0.13 | 4.06 | 5.19 | 7.18 |
| 3.25 | 1 (std.) | 1.375 | 0.88 | 2.75 | 4.69 | 5.81 | 0.38 | 4.31 | 5.44 | 8.06 |
| | 2 | 2.000 | 1.25 | 3.13 | 5.06 | 6.81 | 0.38 | 4.69 | 6.44 | 8.43 |
| | 3 | 1.750 | 1.13 | 3.00 | 4.94 | 6.19 | 0.38 | 4.56 | 5.81 | 8.31 |
| 4.00 | 1 (std.) | 1.750 | 1.00 | 3.00 | 4.94 | 6.19 | 0.13 | 4.81 | 6.06 | 8.56 |
| | 2 | 2.500 | 1.38 | 3.38 | 5.31 | 7.56 | 0.13 | 5.19 | 7.44 | 8.94 |
| | 3 | 2.000 | 1.13 | 3.13 | 5.06 | 6.81 | 0.13 | 4.94 | 6.69 | 8.68 |
| 5.00 | 1 (std.) | 2.000 | 1.13 | 3.13 | 5.06 | 6.81 | 0 | 5.44 | 7.19 | 9.44 |
| | 2 | 3.500 | 1.38 | 3.38 | 5.31 | 8.69 | 0 | 5.69 | 9.06 | 9.69 |
| | 3 | 2.500 | 1.38 | 3.38 | 5.31 | 7.56 | 0 | 5.69 | 7.94 | 9.69 |
| | 4 | 3.000 | 1.38 | 3.38 | 5.31 | 7.94 | 0 | 5.69 | 8.31 | 9.69 |
| 6.00 | 1 (std.) | 2.500 | 1.25 | 3.50 | 6.06 | 8.31 | 0.25 | 5.81 | 8.06 | 10.93 |
| | 2 | 4.000 | 1.25 | 3.50 | 6.06 | 9.56 | 0.25 | 5.81 | 9.31 | 10.93 |
| | 3 | 3.000 | 1.25 | 3.50 | 6.06 | 8.69 | 0.25 | 5.81 | 8.44 | 10.93 |
| | 4 | 3.500 | 1.25 | 3.50 | 6.06 | 9.44 | 0.25 | 5.81 | 9.19 | 10.93 |

[3]Dimension XI to be specified by customer. Reference point for rod end Style 55 is end of piston rod.
[4]Dimensions shown are valid for standard W and WG dimension.

View Table of Contents

## Heavy Duty Intermediate Fixed Trunnion Mounting

Style DE
(NFPA Style MT4)

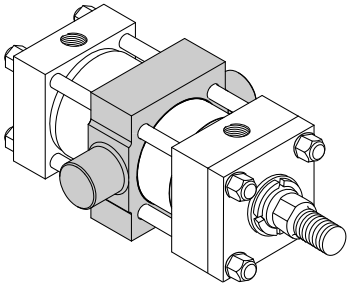

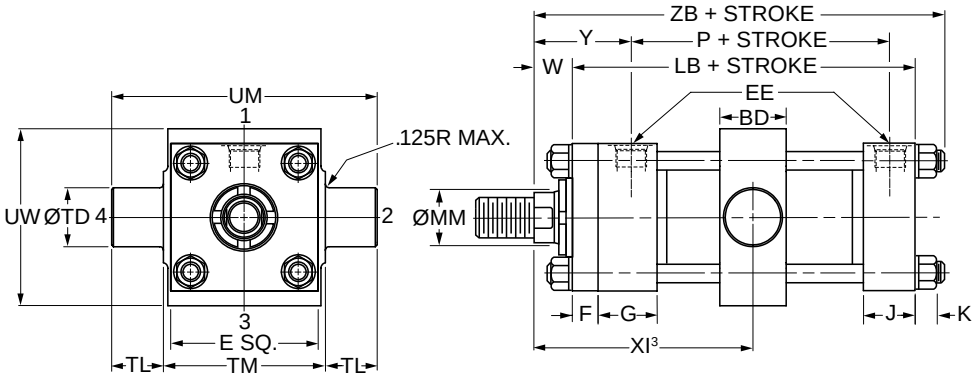


### Style DE – Dimensional and Mounting Data

| Bore Ø | BD | E | EE | | F | G | J | K Max. | TD Ø +.000 -.001 | TL | TM | UM | UW | Add Stroke | |
|---|---|---|---|---|---|---|---|---|---|---|---|---|---|---|---|
| | | | NPTF[1] | SAE[2] | | | | | | | | | | LB | P |
| 4.00 | 2.25 | 5.00 | 3/4 | 12 | 0.88 | 2.00 | 1.75 | 0.68 | 2.000 | 1.75 | 5.50 | 9.00 | 6.00 | 6.63 | 3.75 |
| 5.00 | 2.75 | 6.50 | 3/4 | 12 | 0.88 | 2.00 | 1.75 | 0.94 | 2.500 | 1.75 | 7.00 | 10.50 | 7.50 | 7.13 | 4.25 |
| 6.00 | 3.25 | 7.50 | 1 | 16 | 1.00 | 2.25 | 2.25 | 1.05 | 3.000 | 2.00 | 8.50 | 12.50 | 9.50 | 8.38 | 4.88 |

[1]NPTF ports are available at no extra charge.
[2]SAE straight thread ports are standard and are indicated by port number.

### Style DE – Dimensional and Mounting Data

| Bore Ø | Rod No. | MM Rod Ø | W | Y | Minimum XI[3] | | Style DE Minimum Stroke | Add Stroke | | |
|---|---|---|---|---|---|---|---|---|---|---|
| | | | | | Styles 4, 8 & 9 | Style 55 | | Maximum XI[4] | | ZB Max |
| | | | | | | | | Styles 4, 8 & 9 | Style 55 | |
| 4.00 | 1 (std.) | 1.750 | 1.00 | 3.00 | 5.06 | 6.31 | 0.38 | 4.69 | 5.94 | 8.56 |
| | 2 | 2.500 | 1.38 | 3.38 | 5.44 | 7.69 | 0.38 | 5.06 | 7.31 | 8.94 |
| | 3 | 2.000 | 1.13 | 3.13 | 5.19 | 6.94 | 0.38 | 4.81 | 6.56 | 8.68 |
| 5.00 | 1 (std.) | 2.000 | 1.13 | 3.13 | 5.44 | 7.19 | 0.38 | 5.06 | 6.81 | 9.44 |
| | 2 | 3.500 | 1.38 | 3.38 | 5.69 | 9.06 | 0.38 | 5.31 | 8.69 | 9.69 |
| | 3 | 2.500 | 1.38 | 3.38 | 5.69 | 7.94 | 0.38 | 5.31 | 7.56 | 9.69 |
| | 4 | 3.000 | 1.38 | 3.38 | 5.69 | 8.31 | 0.38 | 5.31 | 7.94 | 9.69 |
| 6.00 | 1 (std.) | 2.500 | 1.25 | 3.50 | 6.19 | 8.44 | 0.50 | 5.69 | 7.94 | 10.93 |
| | 2 | 4.000 | 1.25 | 3.50 | 6.19 | 9.69 | 0.50 | 5.69 | 9.19 | 10.93 |
| | 3 | 3.000 | 1.25 | 3.50 | 6.19 | 8.81 | 0.50 | 5.69 | 8.31 | 10.93 |
| | 4 | 3.500 | 1.25 | 3.50 | 6.19 | 9.56 | 0.50 | 5.69 | 9.06 | 10.93 |

[3]Dimension XI to be specified by customer. Reference point for rod end Style 55 is end of piston rod.
[4]Dimensions shown are valid for standard W and WG dimension.

View Table of Contents



## Spherical Bearing Mounting
Style SB

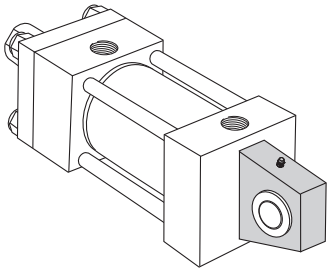

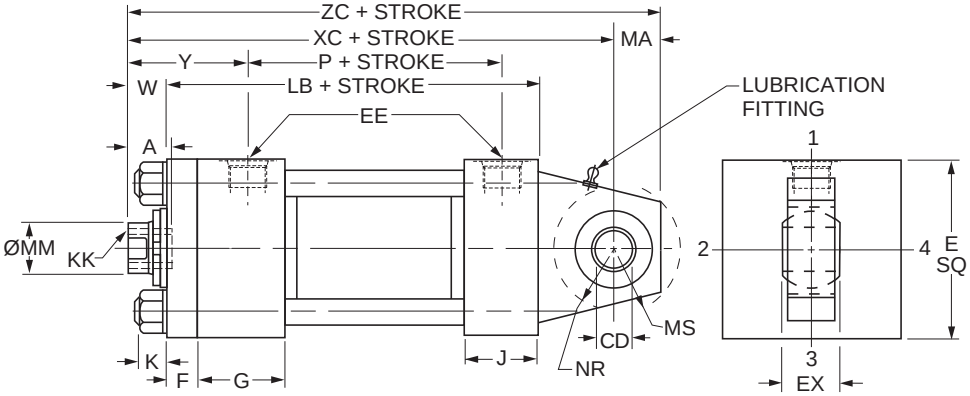


## Style SB — Dimensional and Mounting Data

| Bore Ø | A | CD[1] Ø +0.0000 -0.0005 | E | EE | | EX | F | G | J | K Max. | MA | MS | NR | Add Stroke | | Maximum Operating psi[2] |
|---|---|---|---|---|---|---|---|---|---|---|---|---|---|---|---|---|
| | | | | NPTF | SAE | | | | | | | | | LB | P | |
| 1.50 | 0.75 | 0.5000 | 2.50 | 1/2 | 10 | 0.44 | 0.38 | 1.75 | 1.50 | 0.42 | 0.75 | 0.94 | 0.63 | 5.00 | 2.88 | 1500 |
| 2.00 | 1.13 | 0.7500 | 3.00 | 1/2 | 10 | 0.66 | 0.63 | 1.75 | 1.50 | 0.57 | 1.00 | 1.38 | 1.00 | 5.25 | 2.88 | 2200 |
| 2.50 | 1.13 | 0.7500 | 3.50 | 1/2 | 10 | 0.66 | 0.63 | 1.75 | 1.50 | 0.57 | 1.00 | 1.38 | 1.00 | 5.38 | 3.00 | 1450 |
| 3.25 | 1.63 | 1.0000 | 4.50 | 3/4 | 12 | 0.88 | 0.75 | 2.00 | 1.75 | 0.68 | 1.25 | 1.69 | 1.25 | 6.25 | 3.50 | 1500 |
| 4.00 | 2.00 | 1.3750 | 5.00 | 3/4 | 12 | 1.19 | 0.88 | 2.00 | 1.75 | 0.68 | 1.88 | 2.44 | 1.63 | 6.63 | 3.75 | 1850 |
| 5.00 | 2.25 | 1.7500 | 6.50 | 3/4 | 12 | 1.53 | 0.88 | 2.00 | 1.75 | 0.94 | 2.50 | 2.88 | 2.06 | 7.13 | 4.25 | 2000 |
| 6.00 | 3.00 | 2.0000 | 7.50 | 1 | 16 | 1.75 | 1.00 | 2.25 | 2.25 | 1.05[3] | 2.50 | 3.31 | 2.38 | 8.38 | 4.88 | 1800 |

[1] Diameter CD is hole diameter.
[2] Maximum operating pressure at 4:1 design factor is based on tensile strength of material. Pressure ratings are based on standard bearing ratings.
[3] 6.00" bore is constructed with tie rod nuts on both ends.

## Style SB – Dimensional and Mounting Data

| Bore Ø | Rod No. | MM Rod Ø | Thread | | W | Y | Add Stroke | | |
|---|---|---|---|---|---|---|---|---|---|
| | | | Style 9 KK[4] | Style 7 KK[4] | | | XC | XL | ZC |
| 1.50 | 1 (std.) | 0.625 | 7/16-20 | — | 0.63 | 2.00 | 6.38 | 7.25 | 7.13 |
| | 2 | 1.000 | — | 7/16-20 | 1.00 | 2.38 | 6.75 | 7.63 | 7.50 |
| 2.00 | 1 (std.) | 1.000 | 3/4-16 | — | 0.75 | 2.38 | 7.25 | 8.50 | 8.25 |
| | 2 | 1.375 | — | 3/4-16 | 1.00 | 2.63 | 7.50 | 8.75 | 8.50 |
| 2.50 | 1 (std.) | 1.000 | 3/4-16 | — | 0.75 | 2.38 | 7.38 | 8.63 | 8.38 |
| | 2 | 1.750 | — | 3/4-16 | 1.25 | 2.88 | 7.88 | 9.13 | 8.88 |
| | 3 | 1.375 | — | 3/4-16 | 1.00 | 2.63 | 7.63 | 8.88 | 8.63 |
| 3.25 | 1 (std.) | 1.375 | 1-14 | — | 0.88 | 2.75 | 8.63 | 10.50 | 9.88 |
| | 2 | 2.000 | — | 1-14 | 1.25 | 3.13 | 9.00 | 10.88 | 10.25 |
| | 3 | 1.750 | — | 1-14 | 1.13 | 3.00 | 8.88 | 10.75 | 10.13 |
| 4.00 | 1 (std.) | 1.750 | 1 1/4-12 | — | 1.00 | 3.00 | 9.75 | 11.88 | 11.63 |
| | 2 | 2.500 | — | 1 1/4-12 | 1.38 | 3.38 | 10.13 | 12.25 | 12.00 |
| | 3 | 2.000 | — | 1 1/4-12 | 1.13 | 3.13 | 9.88 | 12.00 | 11.75 |
| 5.00 | 1 (std.) | 2.000 | 1 1/2-12 | — | 1.13 | 3.13 | 10.50 | 13.00 | 13.00 |
| | 2 | 3.500 | — | 1 1/2-12 | 1.38 | 3.38 | 10.75 | 13.25 | 13.25 |
| | 3 | 2.500 | — | 1 1/2-12 | 1.38 | 3.38 | 10.75 | 13.25 | 13.25 |
| | 4 | 3.000 | — | 1 1/2-12 | 1.38 | 3.38 | 10.75 | 13.25 | 13.25 |
| 6.00 | 1 (std.) | 2.500 | 1 7/8-12 | — | 1.25 | 3.50 | 12.13 | 14.88 | 14.63 |
| | 2 | 4.000 | — | 1 7/8-12 | 1.25 | 3.50 | 12.13 | 14.88 | 14.63 |
| | 3 | 3.000 | — | 1 7/8-12 | 1.25 | 3.50 | 12.13 | 14.88 | 14.63 |
| | 4 | 3.500 | — | 1 7/8-12 | 1.25 | 3.50 | 12.13 | 14.88 | 14.63 |

[4] Style 9 and Style 7 threads listed are for a spherical rod eye (sold separately) with pin diameter that matches the cap pin.

## Style SB – Recommended maximum swivel angle on each side of the cylinder centerline.

| Bore Ø | Head End Mounted | | Cap End Mounted | |
|---|---|---|---|---|
| | Angle a | Tan. of a | Angle a | Tan. of a |
| 1.50 | 2.00° | .035 | 2.00° | .035 |
| 2.00 | 2.50° | .044 | 4.50° | .079 |
| 2.50 | 2.50° | .044 | 4.50° | .079 |
| 3.25 | 3.00° | .052 | 3.00° | .052 |
| 4.00 | 2.50° | .044 | 3.00° | .052 |
| 5.00 | 3.00° | .052 | 3.00° | .052 |
| 6.00 | 3.00° | .052 | 3.00° | .052 |

Note: Dimension X is the maximum off center mounting of the cylinder. To determine dimension X for various stroke lengths multiply the distance between pivot pin holes by tangent of angle a. For extended position use X = XL + 2X stroke.

## Mounting Information

Head End Mounting

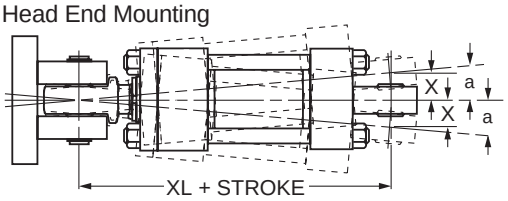


Cap End Mounting

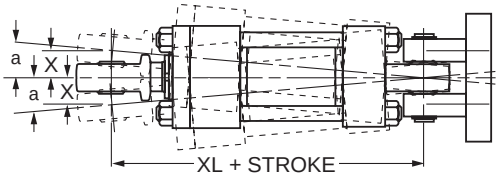

View Table of Contents

## Spherical Bearing Mounting
Style SE

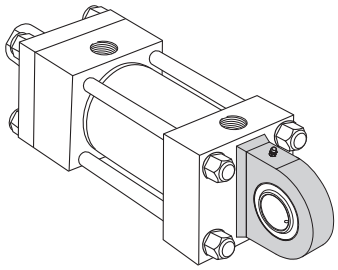

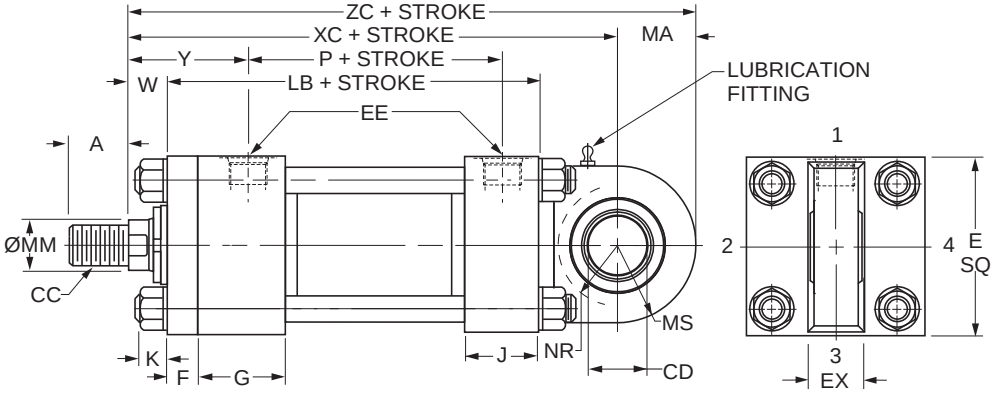


### Style SE — Dimensional and Mounting Data

| Bore Ø | A | CD[1] Ø +0.0000 -0.0005 | E | EE | | EX | F | G | J | K Max. | MA | MS | NR | Add Stroke | |
|---|---|---|---|---|---|---|---|---|---|---|---|---|---|---|---|
| | | | | NPTF | SAE | | | | | | | | | LB | P |
| 1.50 | 0.75 | 0.7500 | 2.50 | 1/2 | 10 | 0.66 | 0.38 | 1.75 | 1.50 | 0.42 | 1.00 | 1.00 | 0.75 | 5.00 | 2.88 |
| 2.00 | 1.13 | 1.0000 | 3.00 | 1/2 | 10 | 0.88 | 0.63 | 1.75 | 1.50 | 0.57 | 1.25 | 1.25 | 1.00 | 5.25 | 2.88 |
| 2.50 | 1.13 | 1.2500 | 3.50 | 1/2 | 10 | 1.09 | 0.63 | 1.75 | 1.50 | 0.57 | 1.50 | 1.50 | 1.31 | 5.38 | 3.00 |
| 3.25 | 1.63 | 1.5000 | 4.50 | 3/4 | 12 | 1.31 | 0.75 | 2.00 | 1.75 | 0.68 | 2.00 | 2.00 | 1.75 | 6.25 | 3.50 |
| 4.00 | 2.00 | 2.0000 | 5.00 | 3/4 | 12 | 1.75 | 0.88 | 2.00 | 1.75 | 0.68 | 2.25 | 2.25 | 2.13 | 6.63 | 3.75 |
| 5.00 | 2.25 | 2.5000 | 6.50 | 3/4 | 12 | 2.19 | 0.88 | 2.00 | 1.75 | 0.94 | 3.00 | 3.00 | 2.75 | 7.13 | 4.25 |
| 6.00 | 3.00 | 3.0000 | 7.50 | 1 | 16 | 2.63 | 1.00 | 2.25 | 2.25 | 1.05 | 3.50 | 3.50 | 3.13 | 8.38 | 4.88 |

[1] Diameter CD is hole diameter.
[2] Maximum operating pressure at 4:1 design factor is based on tensile strength of material. Pressure ratings are based on standard bearing ratings.

### Style SE – Dimensional and Mounting Data

| Bore Ø | Rod No. | MM Rod Ø | Thread Style 8 CC[3] | A | W | Y | Add Stroke | | |
|---|---|---|---|---|---|---|---|---|---|
| | | | | | | | XC | XL | ZC |
| 1.50 | 1 (std.) | 0.625 | 1/2-20 | 0.75 | 0.63 | 2.00 | 6.88 | 9.01 | 7.88 |
| | 2 | 1.000 | [3] | [3] | 1.00 | 2.38 | 7.25 | 9.38 | 8.25 |
| 2.00 | 1 (std.) | 1.000 | 7/8-14 | 1.13 | 0.75 | 2.38 | 7.56 | 10.56 | 8.81 |
| | 2 | 1.375 | [3] | [3] | 1.00 | 2.63 | 7.81 | 10.81 | 9.06 |
| 2.50 | 1 (std.) | 1.000 | 7/8-14 | 1.13 | 0.75 | 2.38 | 7.75 | 10.75 | 9.25 |
| | 2 | 1.750 | [3] | [3] | 1.25 | 2.88 | 8.25 | 11.25 | 9.75 |
| | 3 | 1.375 | [3] | [3] | 1.00 | 2.63 | 8.00 | 11.00 | 9.50 |
| 3.25 | 1 (std.) | 1.375 | 1 1/4-12 | 1.63 | 0.88 | 2.75 | 9.25 | 13.38 | 11.25 |
| | 2 | 2.000 | [3] | [3] | 1.25 | 3.13 | 9.63 | 13.75 | 11.63 |
| | 3 | 1.750 | [3] | [3] | 1.13 | 3.00 | 9.50 | 13.63 | 11.50 |
| 4.00 | 1 (std.) | 1.750 | 1 1/2-12 | 2.00 | 1.00 | 3.00 | 10.13 | 15.13 | 12.38 |
| | 2 | 2.500 | [3] | [3] | 1.38 | 3.38 | 10.50 | 15.50 | 12.75 |
| | 3 | 2.000 | [3] | [3] | 1.13 | 3.13 | 10.25 | 15.25 | 12.50 |
| 5.00 | 1 (std.) | 2.000 | 1 3/4-12 | 2.25 | 1.13 | 3.13 | 11.50 | 17.25 | 14.50 |
| | 2 | 3.500 | [3] | [3] | 1.38 | 3.38 | 11.75 | 17.50 | 14.75 |
| | 3 | 2.500 | [3] | [3] | 1.38 | 3.38 | 11.75 | 17.50 | 14.75 |
| | 4 | 3.000 | [3] | [3] | 1.38 | 3.38 | 11.75 | 17.50 | 14.75 |
| 6.00 | 1 (std.) | 2.500 | 2 1/4-12 | 3.00 | 1.25 | 3.50 | 13.38 | 20.38 | 16.88 |
| | 2 | 4.000 | [3] | [3] | 1.25 | 3.50 | 13.38 | 20.38 | 16.88 |
| | 3 | 3.000 | [3] | [3] | 1.25 | 3.50 | 13.38 | 20.38 | 16.88 |
| | 4 | 3.500 | [3] | [3] | 1.25 | 3.50 | 13.38 | 20.38 | 16.88 |

### Style SE – Recommended maximum swivel angle on each side of the cylinder centerline.

| Bore Ø | Head End Mounted | | Cap End Mounted | |
|---|---|---|---|---|
| | Angle a | Tan. of a | Angle a | Tan. of a |
| 1.50 | 2.50° | 0.044 | 3.00° | 0.052 |
| 2.00 | 3.00° | 0.052 | 3.00° | 0.052 |
| 2.50 | 3.00° | 0.052 | 3.00° | 0.052 |
| 3.25 | 3.00° | 0.052 | 2.75° | 0.048 |
| 4.00 | 3.00° | 0.052 | 3.00° | 0.052 |
| 5.00 | 3.00° | 0.052 | 3.00° | 0.052 |
| 6.00 | 3.00° | 0.052 | 3.00° | 0.052 |

Note: Dimension X is the maximum off center mounting of the cylinder. To determine dimension X for various stroke lengths multiply the distance between pivot pin holes by tangent of angle a. For extended position use X = XL + 2X stroke.

### Mounting Information

Head End Mounting

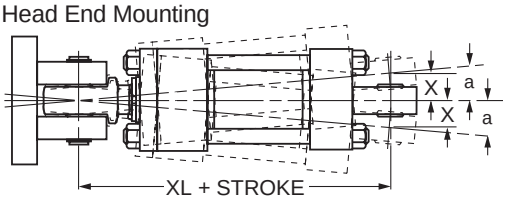


Cap End Mounting

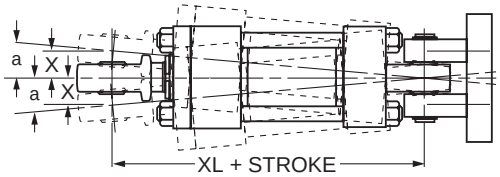


[3] To match pin diameter in rod eye and cap, when an oversize rod is required, specify rod end style '3', 'CC' thread and 'A' thread length for the standard rod diameter (Rod No. 1 for the bore), and 'W' for the oversize rod. Order the rod eye and clevis bracket for the required bore size from the tables on the Style SE Spherical Bearing Accessories page.

View Table of Contents



## Double Rod Cylinder
Style K

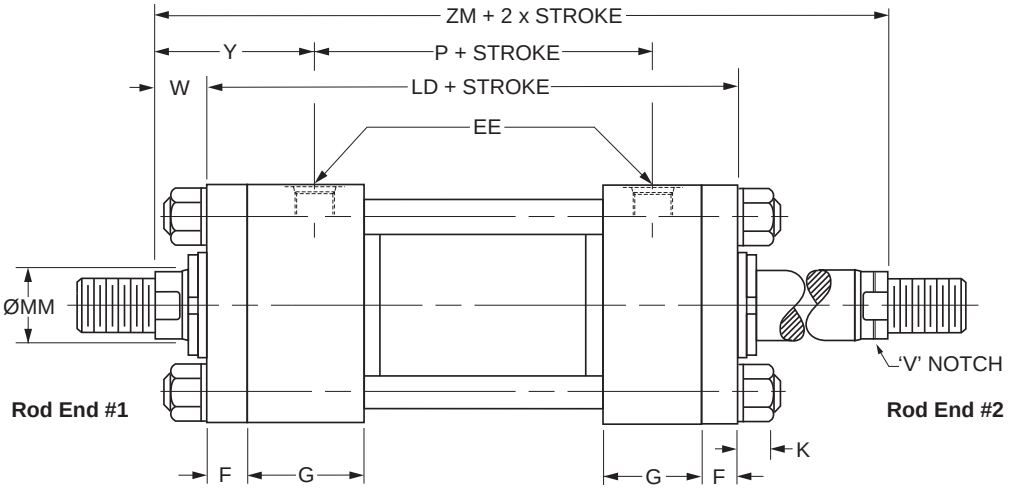


## Double Rod End Mounting Styles

See Mounting Groups page in Section H for guidance on double rod end cylinder mounting style selection.

| Mounting Styles for Single Rod Models | Mounting Styles for Corresponding Double Rod Models[1] | | Dimensions Shown on This Page Supplement Dimensions on 1.50" - 6.00" Bore Pages Listed Below |
|---|---|---|---|
| | Load Connected To Rod On Cylinder Mounting End | Load Connected To Rod Opposite Cylinder Mounting End | |
| T | KT | KT | 14 |
| TB | KTB | KTC | 14 |
| TD | KTD | KTD | 14 |
| J | KJ | KH | 15 |
| JB | KJB | KHB | 16 |
| JJ | KJJ | KHH | 17 |
| C | KC | KC | 21 |
| F | KF | KF | 22 |
| D | KD | KDB | 24 |
| DD | KDD[2] | KDD[2] | 26 |
| DE | KDE[2] | KDE[2] | 27 |

[1] Connect load to piston rod without 'V' notch. If only one end of the Double Rod Cylinder is to be cushioned, be sure to clearly specify which end this will be.

[2] Specify XI dimension for Styles DD & DE from #1 rod end (without 'V' notch).

| Bore Ø | Rod No. | MM Rod Ø | Add Stroke | | | Add 2X Stroke |
|---|---|---|---|---|---|---|
| | | | LD | SNK | SSK | ZM |
| 1.50 | 1 (std.) | 0.625 | 5.63 | 2.88 | 4.13 | 6.88 |
| | 2 | 1.000 | 5.63 | 2.88 | 4.13 | 7.63 |
| 2.00 | 1 (std.) | 1.000 | 6.13 | 2.88 | 3.88 | 7.63 |
| | 2 | 1.375 | 6.13 | 2.88 | 3.88 | 8.13 |
| 2.50 | 1 (std.) | 1.000 | 6.25 | 3.00 | 3.63 | 7.75 |
| | 2 | 1.750 | 6.25 | 3.00 | 3.63 | 8.75 |
| | 3 | 1.375 | 6.25 | 3.00 | 3.63 | 8.25 |
| 3.25 | 1 (std.) | 1.375 | 7.25 | 3.50 | 4.38 | 9.00 |
| | 2 | 2.000 | 7.25 | 3.50 | 4.38 | 9.75 |
| | 3 | 1.750 | 7.25 | 3.50 | 4.38 | 9.50 |
| 4.00 | 1 (std.) | 1.750 | 7.75 | 3.75 | 4.25 | 9.75 |
| | 2 | 2.500 | 7.75 | 3.75 | 4.25 | 10.50 |
| | 3 | 2.000 | 7.75 | 3.75 | 4.25 | 10.00 |
| 5.00 | 1 (std.) | 2.000 | 8.25 | 4.25 | 4.75 | 10.50 |
| | 2 | 3.500 | 8.25 | 4.25 | 4.75 | 11.00 |
| | 3 | 2.500 | 8.25 | 4.25 | 4.75 | 11.00 |
| | 4 | 3.000 | 8.25 | 4.25 | 4.75 | 11.00 |
| 6.00 | 1 (std.) | 2.500 | 9.38 | 4.88 | 5.13 | 11.88 |
| | 2 | 4.000 | 9.38 | 4.88 | 5.13 | 11.88 |
| | 3 | 3.000 | 9.38 | 4.88 | 5.13 | 11.88 |
| | 4 | 3.500 | 9.38 | 4.88 | 5.13 | 11.88 |
| Replaces On single rod mounting styles: | | | LB | SN | SS | – |
| | | | All Mtg. Styles | F | C | All Mtg. Styles |

## How to Use Double Rod Cylinder Dimension Drawings

To determine dimensions for a double rod cylinder, first refer to the desired single rod mounting style cylinder shown on preceding pages of this catalog. (See table above.) After selecting necessary dimensions from that drawing, return to this page supplement the single rod dimensions with those shown on drawing at right and dimension table below. Note that double rod cylinders have a head (Dim. G) at both ends and that dimension LD replaces LB. The double rod dimensions differ from, or are in addition to those for single rod cylinders shown on preceding pages and provide the information needed to completely dimension a double rod cylinder.

On a double rod cylinder where the two rod ends are different, be sure to clearly state which rod end is to be assembled at which end. Port position 1 is standard. If other than standard, specify pos. 2, 3 or 4 when viewed from rod end #1 only. See port position information in Section H.

View Table of Contents

# Notes

View Table of Contents



## Standard Specifications

- Heavy Duty Service — ANSI/(NFPA) T3.6.7R3 - 2009 Specifications and Mounting Dimension Standards
- Standard Construction — Square Head – Tie Rod Design
- Nominal Pressure — 3000 psi[1]
- Standard Fluid — Hydraulic Oil
- Standard Temperature — -10°F to +165°F[2]
- Piston Rod Diameter — 3.000" through 5.500"

*In line with our policy of continuing product improvement, specifications in this catalog are subject to change.*

- Mounting Styles — 17 standard styles at various application ratings
- Strokes — Available in any practical stroke length
- Cushions — Optional at either end or both ends of stroke
- Rod Ends — Four Standard Choices — specials to order

[1] If hydraulic operating pressure exceeds 3000 psi, send application data for engineering evaluation and recommendation. See Section H for actual design factors.

[2] See Section H for higher temperature service.

## Available Mounting Styles

Tie Rods Extended Head End

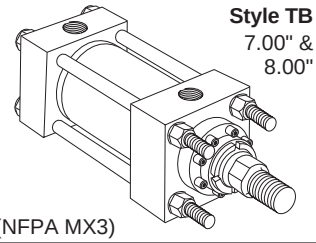

**Style TB** 7.00" & 8.00"

(NFPA MX3)

Tie Rods Extended Cap End

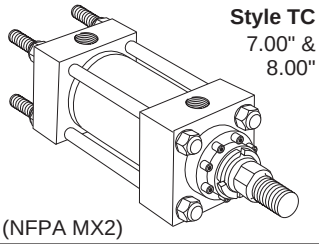

**Style TC** 7.00" & 8.00"

(NFPA MX2)

Tie Rods Extended Both Ends

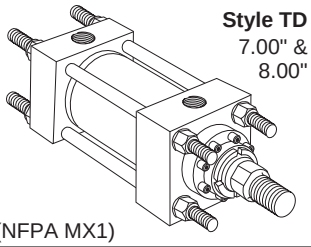

**Style TD** 7.00" & 8.00"

(NFPA MX1)

Head Rectangular Flange

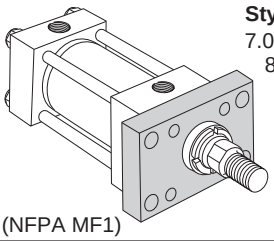

**Style J** 7.00" & 8.00"

(NFPA MF1)

Head Square Flange

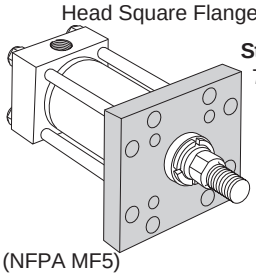

**Style JB** 7.00" & 8.00"

(NFPA MF5)

Head Rectangular

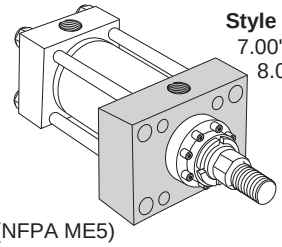

**Style JJ** 7.00" & 8.00"

(NFPA ME5)

Cap Rectangular Flange

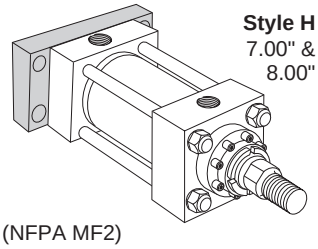

**Style H** 7.00" & 8.00"

(NFPA MF2)

Cap Square Flange

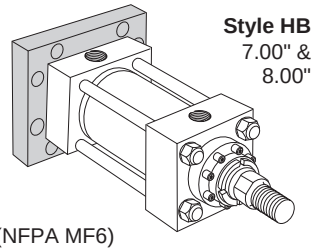

**Style HB** 7.00" & 8.00"

(NFPA MF6)

Cap Rectangular

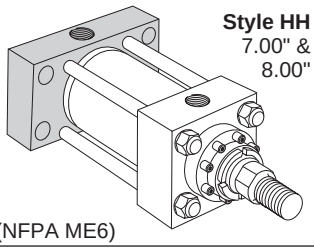

**Style HH** 7.00" & 8.00"

(NFPA ME6)

Side Lug

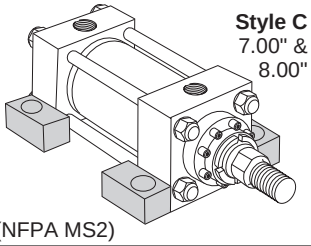

**Style C** 7.00" & 8.00"

(NFPA MS2)

Side Tapped

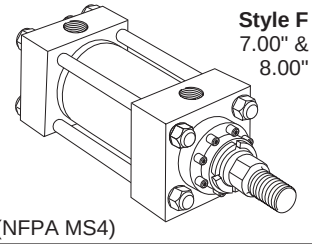

**Style F** 7.00" & 8.00"

(NFPA MS4)

Cap Fixed Clevis

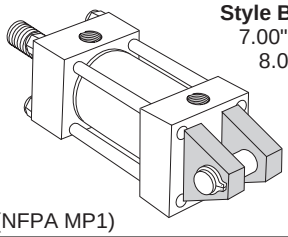

**Style BB** 7.00" & 8.00"

(NFPA MP1)

Head Trunnion

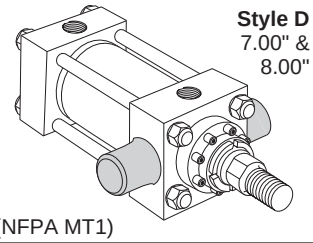

**Style D** 7.00" & 8.00"

(NFPA MT1)

Cap Trunnion

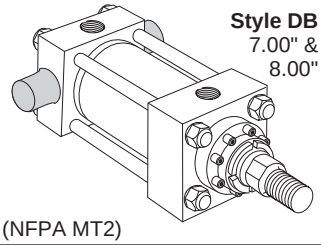

**Style DB** 7.00" & 8.00"

(NFPA MT2)

Intermediate Fixed Trunnion

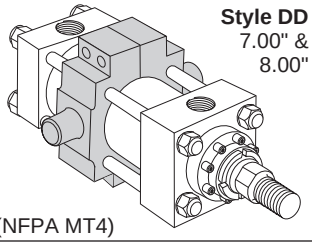

**Style DD** 7.00" & 8.00"

(NFPA MT4)

HD Intermediate Trunnion Mount

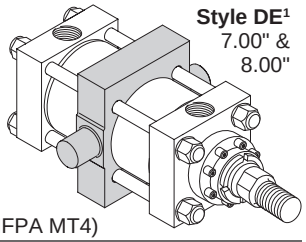

**Style DE**[1] 7.00" & 8.00"

(NFPA MT4)

HD Spherical Bearing

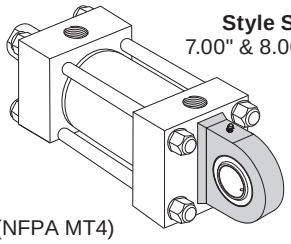

**Style SE** 7.00" & 8.00"

(NFPA MT4)

Double Rod Cylinders

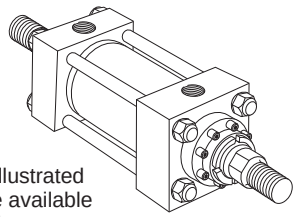

**Style KT Shown**

Most of the above illustrated mounting styles are available in double rod cylinders.

[1]Style DE Mount conforms to NFPA MT4 dimensional standard.

NOTE: Series 3H Hydraulic Cylinders fully meet ANSI/(NFPA) T3.6.7R3-2009 Specifications and Mounting Dimension Standards for Square Head Industrial Fluidpower Cylinders.

View Table of Contents

## Rod End Dimensions – 7.00" & 8.00" Bore

**Thread Style 4 (NFPA Style SM)**
**Small Male**

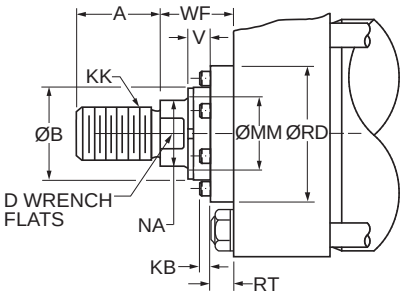


**Thread Style 8 (NFPA Style IM)**
**Intermediate Male**

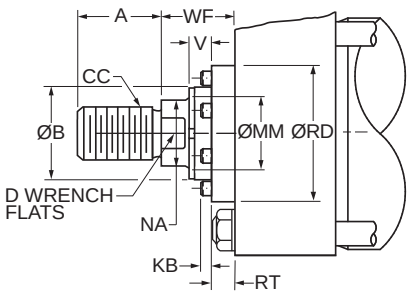


**Thread Style 9[2] (NFPA Style SF)**
**Small Female**

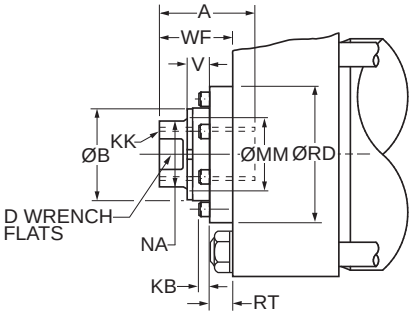


**Thread Style 55[1]**

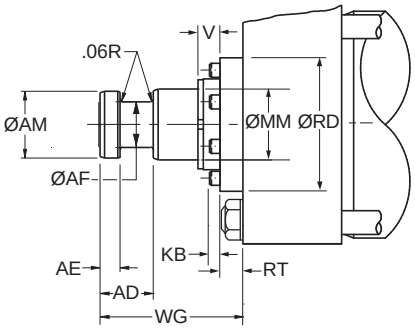


## Rod End Dimensions – 7.00" & 8.00" Bore

| Bore Ø | Rod No. | MM Rod Ø | Thread | | Rod Extensions and Pilot Dimensions | | | | | | | | |
|---|---|---|---|---|---|---|---|---|---|---|---|---|---|
| | | | Style 8 CC | Style 4 & 9 KK | A | B Ø +.000 -.002 | D | KB | NA | V | RD Ø | RT | WF |
| 7.00 | 1 (std.) | 3.000 | 2 3/4-12 | 2 1/4-12 | 3.50 | 3.749 | 2.63 | 0.220 | 2.88 | 0.63 | 5.26 | 0.63 | 2.25 |
| | 2 | 5.000 | 4 3/4-12 | 3 1/2-12 | 5.00 | 5.749 | -[3] | 0.000 | 4.88 | 0.34 | 7.25 | 0.91 | 2.25 |
| | 3 | 3.500 | 3 1/4-12 | 2 1/2-12 | 3.50 | 4.249 | 3.00 | 0.250 | 3.38 | 0.63 | 5.76 | 0.63 | 2.25 |
| | 4 | 4.000 | 3 3/4-12 | 3-12 | 4.00 | 4.749 | 3.38 | 0.160 | 3.88 | 0.50 | 6.31 | 0.75 | 2.25 |
| | 5 | 4.500 | 4 1/4-12 | 3 1/4-12 | 4.50 | 5.249 | -[3] | 0.160 | 4.38 | 0.50 | 6.94 | 0.75 | 2.25 |
| 8.00 | 1 (std.) | 3.500 | 3 1/4-12 | 2 1/2-12 | 3.50 | 4.249 | 3.00 | 0.250 | 3.38 | 0.63 | 5.76 | 0.63 | 2.25 |
| | 2 | 5.500 | 5 1/4-12 | 4-12 | 5.50 | 6.249 | -[3] | 0.000 | 5.38 | 0.34 | 7.94 | 0.91 | 2.25 |
| | 3 | 4.000 | 3 3/4-12 | 3-12 | 4.00 | 4.749 | 3.38 | 0.160 | 3.88 | 0.50 | 6.31 | 0.75 | 2.25 |
| | 4 | 4.500 | 4 1/4-12 | 3 1/4-12 | 4.50 | 5.249 | -[3] | 0.160 | 4.38 | 0.50 | 6.94 | 0.75 | 2.25 |
| | 5 | 5.000 | 4 3/4-12 | 3 1/2-12 | 5.00 | 5.749 | -[3] | 0.000 | 4.88 | 0.34 | 7.25 | 0.91 | 2.25 |

### "Special" Thread Style 3

Special thread, extension, rod eye, blank, etc., are also available.

To order, specify "Style 3" and give desired dimensions for KK, A, W or WF. If otherwise special, furnish dimensioned sketch.

[1] For special WG dimension, specify "Style 3" and give desired dimension for WG. For other changes, place "S" in the model code, and describe rod end with dimensioned sketch.

[2] Style 9 stroke restrictions may apply. See Style 9 Minimum Stroke Table on How to Order page for details.

[3] These piston rod numbers will have 4 spanner wrench holes instead of wrench flats. See rod drawings on page 117 for dimensions.

### Style 55 Rod End

| MM Rod Ø | AD | AE +.001 -.001 | AF Ø | AM Ø | WG[1] |
|---|---|---|---|---|---|
| 3.000 | 2.44 | 0.874 | 2.25 | 2.95 | 4.88 |
| 3.500 | 2.69 | 0.999 | 2.50 | 3.45 | 5.63 |
| 4.000 | 2.69 | 0.999 | 3.00 | 3.95 | 5.75 |
| 4.500 | 3.19 | 1.499 | 3.50 | 4.45 | 6.50 |
| 5.000 | 3.19 | 1.499 | 3.88 | 4.95 | 6.63 |
| 5.500 | 3.94 | 1.874 | 4.38 | 5.45 | 7.50 |

View Table of Contents



## Tie Rods Extended Both Ends

Style TD
(NFPA Style MX1)

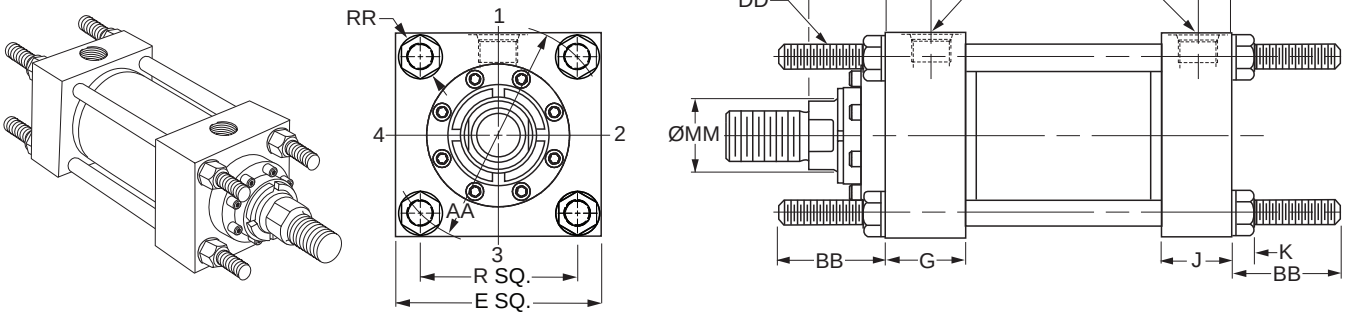


Basic Mounting (T) — NFPA MXO — Not shown is no tie rod extended and can be supplied upon request.

### Style TD – Dimensional and Mounting Data

| Bore Ø | Rod No. | MM Rod Ø | AA | BB | DD | E | EE | | G | J | K Max. | R | RR | WF | Y | Add Stroke | | |
|---|---|---|---|---|---|---|---|---|---|---|---|---|---|---|---|---|---|---|
| | | | | | | | NPTF[1] | SAE[2] | | | | | | | | LG | P | ZJ |
| 7.00 | 1 (std.) | 3.000 | 9.31 | 4.13 | 1 1/8-12 | 8.50 | 1 1/4 | 20 | 2.75 | 2.75 | 1.16 | 6.58 | 2.00 | 2.25 | 3.69 | 8.50 | 5.63 | 10.75 |
| | 2 | 5.000 | 9.31 | 4.13 | 1 1/8-12 | 8.50 | 1 1/4 | 20 | 2.75 | 2.75 | 1.16 | 6.58 | 2.00 | 2.25 | 3.69 | 8.50 | 5.63 | 10.75 |
| | 3 | 3.500 | 9.31 | 4.13 | 1 1/8-12 | 8.50 | 1 1/4 | 20 | 2.75 | 2.75 | 1.16 | 6.58 | 2.00 | 2.25 | 3.69 | 8.50 | 5.63 | 10.75 |
| | 4 | 4.000 | 9.31 | 4.13 | 1 1/8-12 | 8.50 | 1 1/4 | 20 | 2.75 | 2.75 | 1.16 | 6.58 | 2.00 | 2.25 | 3.69 | 8.50 | 5.63 | 10.75 |
| | 5 | 4.500 | 9.31 | 4.13 | 1 1/8-12 | 8.50 | 1 1/4 | 20 | 2.75 | 2.75 | 1.16 | 6.58 | 2.00 | 2.25 | 3.69 | 8.50 | 5.63 | 10.75 |
| 8.00 | 1 (std.) | 3.500 | 10.61 | 4.50 | 1 1/4-12 | 9.50 | 1 1/2 | 24 | 3.00 | 3.00 | 1.28 | 7.50 | 2.19 | 2.25 | 3.81 | 9.50 | 6.38 | 11.75 |
| | 2 | 5.500 | 10.61 | 4.50 | 1 1/4-12 | 9.50 | 1 1/2 | 24 | 3.00 | 3.00 | 1.28 | 7.50 | 2.19 | 2.25 | 3.81 | 9.50 | 6.38 | 11.75 |
| | 3 | 4.000 | 10.61 | 4.50 | 1 1/4-12 | 9.50 | 1 1/2 | 24 | 3.00 | 3.00 | 1.28 | 7.50 | 2.19 | 2.25 | 3.81 | 9.50 | 6.38 | 11.75 |
| | 4 | 4.500 | 10.61 | 4.50 | 1 1/4-12 | 9.50 | 1 1/2 | 24 | 3.00 | 3.00 | 1.28 | 7.50 | 2.19 | 2.25 | 3.81 | 9.50 | 6.38 | 11.75 |
| | 5 | 5.000 | 10.61 | 4.50 | 1 1/4-12 | 9.50 | 1 1/2 | 24 | 3.00 | 3.00 | 1.28 | 7.50 | 2.19 | 2.25 | 3.81 | 9.50 | 6.38 | 11.75 |

[1]NPTF ports are available at no extra charge.
[2]SAE straight thread ports are standard and are indicated by port number.

### Style TB

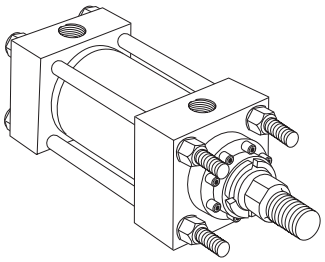

### Style TC

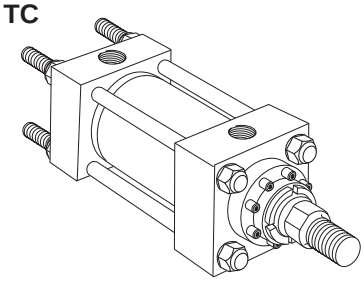

Dimensions for TB and TC Mount may be obtained from the above dimensional table.

View Table of Contents

## Head Rectangular Flange Mounting

Style J
(NFPA Style MF1)

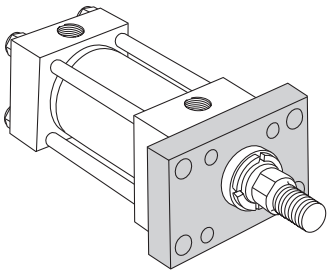

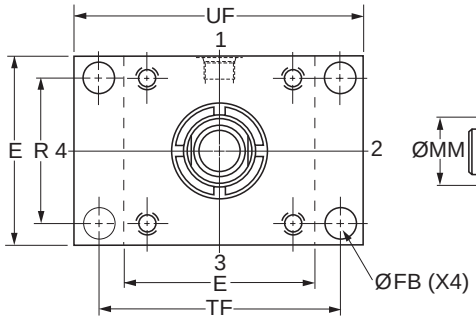


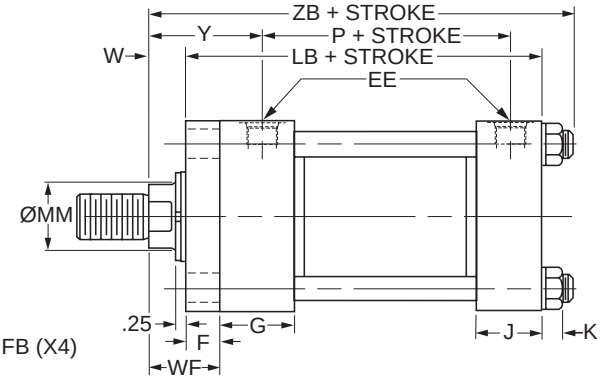


For pressures exceeding those shown use mounting styles JB or JJ.

### Style J – Dimensional and Mounting Data

| Bore Ø | Rod No. | MM Rod Ø | E | EE | | F | FB Ø | G | J | K Max. | R | TF | UF | W | WF | Y | Add Stroke | | |
|---|---|---|---|---|---|---|---|---|---|---|---|---|---|---|---|---|---|---|---|
| | | | | NPTF[1] | SAE[2] | | | | | | | | | | | | LB | P | ZB Max. |
| 7.00 | 1 (std.) | 3.000 | 8.50 | 1 1/4 | 20 | 1.00 | 1.19 | 2.75 | 2.75 | 1.16 | 6.58 | 10.63 | 12.63 | 1.25 | 2.25 | 3.69 | 9.50 | 5.63 | 12.16 |
| | 2 | 5.000 | 8.50 | 1 1/4 | 20 | 1.00 | 1.19 | 2.75 | 2.75 | 1.16 | 6.58 | 10.63 | 12.63 | 1.25 | 2.25 | 3.69 | 9.50 | 5.63 | 12.16 |
| | 3 | 3.500 | 8.50 | 1 1/4 | 20 | 1.00 | 1.19 | 2.75 | 2.75 | 1.16 | 6.58 | 10.63 | 12.63 | 1.25 | 2.25 | 3.69 | 9.50 | 5.63 | 12.16 |
| | 4 | 4.000 | 8.50 | 1 1/4 | 20 | 1.00 | 1.19 | 2.75 | 2.75 | 1.16 | 6.58 | 10.63 | 12.63 | 1.25 | 2.25 | 3.69 | 9.50 | 5.63 | 12.16 |
| | 5 | 4.500 | 8.50 | 1 1/4 | 20 | 1.00 | 1.19 | 2.75 | 2.75 | 1.16 | 6.58 | 10.63 | 12.63 | 1.25 | 2.25 | 3.69 | 9.50 | 5.63 | 12.16 |
| 8.00 | 1 (std.) | 3.500 | 9.50 | 1 1/2 | 24 | 1.00 | 1.31 | 3.00 | 3.00 | 1.28 | 7.50 | 11.81 | 14.00 | 1.25 | 2.25 | 3.81 | 10.50 | 6.38 | 13.28 |
| | 2 | 5.500 | 9.50 | 1 1/2 | 24 | 1.00 | 1.31 | 3.00 | 3.00 | 1.28 | 7.50 | 11.81 | 14.00 | 1.25 | 2.25 | 3.81 | 10.50 | 6.38 | 13.28 |
| | 3 | 4.000 | 9.50 | 1 1/2 | 24 | 1.00 | 1.31 | 3.00 | 3.00 | 1.28 | 7.50 | 11.81 | 14.00 | 1.25 | 2.25 | 3.81 | 10.50 | 6.38 | 13.28 |
| | 4 | 4.500 | 9.50 | 1 1/2 | 24 | 1.00 | 1.31 | 3.00 | 3.00 | 1.28 | 7.50 | 11.81 | 14.00 | 1.25 | 2.25 | 3.81 | 10.50 | 6.38 | 13.28 |
| | 5 | 5.000 | 9.50 | 1 1/2 | 24 | 1.00 | 1.31 | 3.00 | 3.00 | 1.28 | 7.50 | 11.81 | 14.00 | 1.25 | 2.25 | 3.81 | 10.50 | 6.38 | 13.28 |

[1]NPTF ports are available at no extra charge.
[2]SAE straight thread ports are standard and are indicated by port number.

### Style J – Maximum Operating Pressure / 3H

| Bore Ø | Max. psi Push[3] | | | | |
|---|---|---|---|---|---|
| | Rod Code | | | | |
| | 1 | 2 | 3 | 4 | 5 |
| 7.00 | 1400 | 800 | 1200 | 1100 | 1000 |
| 8.00 | 1100 | 800 | 1000 | 1000 | 800 |

[3]Maximum pressure rating – push application.

View Table of Contents



## Head Square Flange Mounting

Style JB
(NFPA Style MF5)

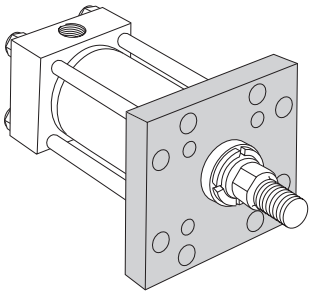

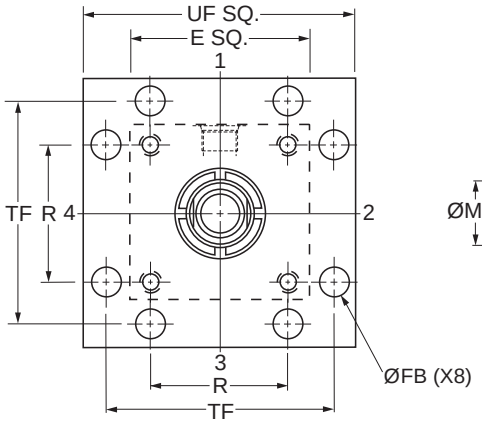


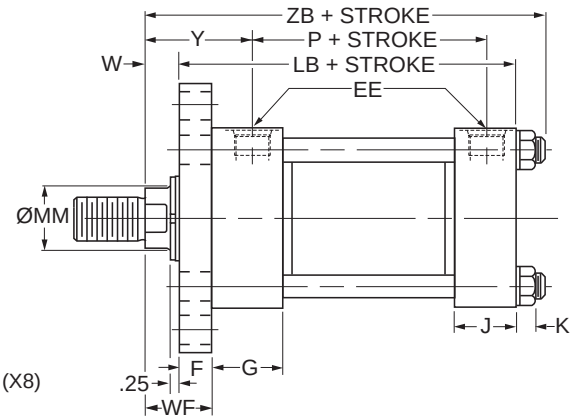


## Style JB – Dimensional and Mounting Data

| Bore Ø | Rod No. | MM Rod Ø | E | EE | | F | FB Ø | G | J | K Max. | R | TF | UF | W | WF | Y | Add Stroke | | |
|---|---|---|---|---|---|---|---|---|---|---|---|---|---|---|---|---|---|---|---|
| | | | | NPTF[1] | SAE[2] | | | | | | | | | | | | LB | P | ZB Max. |
| 7.00 | 1 (std.) | 3.000 | 8.50 | 1 1/4 | 20 | 1.00 | 1.19 | 2.75 | 2.75 | 1.16 | 6.58 | 10.63 | 12.63 | 1.25 | 2.25 | 3.69 | 9.50 | 5.63 | 12.16 |
| | 2 | 5.000 | 8.50 | 1 1/4 | 20 | 1.00 | 1.19 | 2.75 | 2.75 | 1.16 | 6.58 | 10.63 | 12.63 | 1.25 | 2.25 | 3.69 | 9.50 | 5.63 | 12.16 |
| | 3 | 3.500 | 8.50 | 1 1/4 | 20 | 1.00 | 1.19 | 2.75 | 2.75 | 1.16 | 6.58 | 10.63 | 12.63 | 1.25 | 2.25 | 3.69 | 9.50 | 5.63 | 12.16 |
| | 4 | 4.000 | 8.50 | 1 1/4 | 20 | 1.00 | 1.19 | 2.75 | 2.75 | 1.16 | 6.58 | 10.63 | 12.63 | 1.25 | 2.25 | 3.69 | 9.50 | 5.63 | 12.16 |
| | 5 | 4.500 | 8.50 | 1 1/4 | 20 | 1.00 | 1.19 | 2.75 | 2.75 | 1.16 | 6.58 | 10.63 | 12.63 | 1.25 | 2.25 | 3.69 | 9.50 | 5.63 | 12.16 |
| 8.00 | 1 (std.) | 3.500 | 9.50 | 1 1/2 | 24 | 1.00 | 1.31 | 3.00 | 3.00 | 1.28 | 7.50 | 11.81 | 14.00 | 1.25 | 2.25 | 3.81 | 10.50 | 6.38 | 13.28 |
| | 2 | 5.500 | 9.50 | 1 1/2 | 24 | 1.00 | 1.31 | 3.00 | 3.00 | 1.28 | 7.50 | 11.81 | 14.00 | 1.25 | 2.25 | 3.81 | 10.50 | 6.38 | 13.28 |
| | 3 | 4.000 | 9.50 | 1 1/2 | 24 | 1.00 | 1.31 | 3.00 | 3.00 | 1.28 | 7.50 | 11.81 | 14.00 | 1.25 | 2.25 | 3.81 | 10.50 | 6.38 | 13.28 |
| | 4 | 4.500 | 9.50 | 1 1/2 | 24 | 1.00 | 1.31 | 3.00 | 3.00 | 1.28 | 7.50 | 11.81 | 14.00 | 1.25 | 2.25 | 3.81 | 10.50 | 6.38 | 13.28 |
| | 5 | 5.000 | 9.50 | 1 1/2 | 24 | 1.00 | 1.31 | 3.00 | 3.00 | 1.28 | 7.50 | 11.81 | 14.00 | 1.25 | 2.25 | 3.81 | 10.50 | 6.38 | 13.28 |

[1]NPTF ports are available at no extra charge.
[2]SAE straight thread ports are standard and are indicated by port number.

## Style JB – Maximum Operating Pressure / 3H

| Bore Ø | Max. psi Push[3] | | | | |
|---|---|---|---|---|---|
| | Rod Code | | | | |
| | 1 | 2 | 3 | 4 | 5 |
| 7.00 | 3000 | 2700 | 3000 | 3000 | 3000 |
| 8.00 | 3000 | 2300 | 2500 | 2500 | 2500 |

[3]Maximum pressure rating – push application.

View Table of Contents

## Head Rectangular Mounting

Style JJ
(NFPA Style ME5)

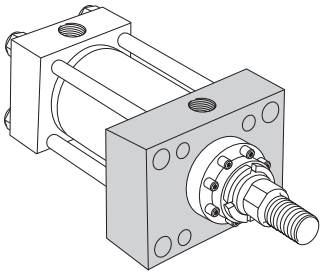

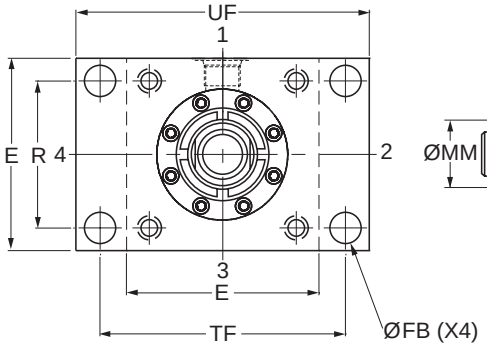


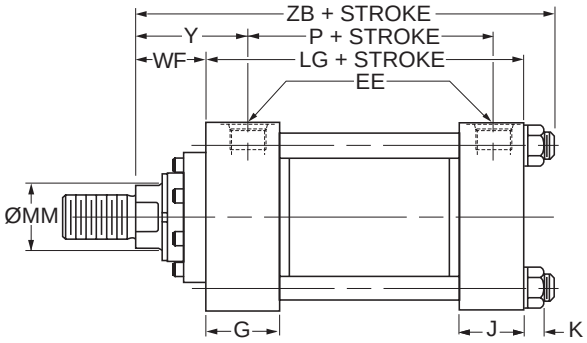


### Style JJ – Dimensional and Mounting Data

| Bore Ø | Rod No. | MM Rod Ø | E | EE | | FB Ø | G | J | K Max. | R | TF | UF | WF | Y | Add Stroke | | |
|---|---|---|---|---|---|---|---|---|---|---|---|---|---|---|---|---|---|
| | | | | NPTF[1] | SAE[2] | | | | | | | | | | LG | P | ZB Max. |
| 7.00 | 1 (std.) | 3.000 | 8.50 | 1 1/4 | 20 | 1.19 | 2.75 | 2.75 | 1.16 | 6.58 | 10.63 | 12.63 | 2.25 | 3.69 | 8.50 | 5.63 | 12.16 |
| | 2 | 5.000 | 8.50 | 1 1/4 | 20 | 1.19 | 2.75 | 2.75 | 1.16 | 6.58 | 10.63 | 12.63 | 2.25 | 3.69 | 8.50 | 5.63 | 12.16 |
| | 3 | 3.500 | 8.50 | 1 1/4 | 20 | 1.19 | 2.75 | 2.75 | 1.16 | 6.58 | 10.63 | 12.63 | 2.25 | 3.69 | 8.50 | 5.63 | 12.16 |
| | 4 | 4.000 | 8.50 | 1 1/4 | 20 | 1.19 | 2.75 | 2.75 | 1.16 | 6.58 | 10.63 | 12.63 | 2.25 | 3.69 | 8.50 | 5.63 | 12.16 |
| | 5 | 4.500 | 8.50 | 1 1/4 | 20 | 1.19 | 2.75 | 2.75 | 1.16 | 6.58 | 10.63 | 12.63 | 2.25 | 3.69 | 8.50 | 5.63 | 12.16 |
| 8.00 | 1 (std.) | 3.500 | 9.50 | 1 1/2 | 24 | 1.31 | 3.00 | 3.00 | 1.28 | 7.50 | 11.81 | 14.00 | 2.25 | 3.81 | 9.50 | 6.38 | 13.28 |
| | 2 | 5.500 | 9.50 | 1 1/2 | 24 | 1.31 | 3.00 | 3.00 | 1.28 | 7.50 | 11.81 | 14.00 | 2.25 | 3.81 | 9.50 | 6.38 | 13.28 |
| | 3 | 4.000 | 9.50 | 1 1/2 | 24 | 1.31 | 3.00 | 3.00 | 1.28 | 7.50 | 11.81 | 14.00 | 2.25 | 3.81 | 9.50 | 6.38 | 13.28 |
| | 4 | 4.500 | 9.50 | 1 1/2 | 24 | 1.31 | 3.00 | 3.00 | 1.28 | 7.50 | 11.81 | 14.00 | 2.25 | 3.81 | 9.50 | 6.38 | 13.28 |
| | 5 | 5.000 | 9.50 | 1 1/2 | 24 | 1.31 | 3.00 | 3.00 | 1.28 | 7.50 | 11.81 | 14.00 | 2.25 | 3.81 | 9.50 | 6.38 | 13.28 |

[1]NPTF ports are available at no extra charge.
[2]SAE straight thread ports are standard and are indicated by port number.

View Table of Contents



## Cap Rectangular Flange Mounting

Style H
(NFPA Style MF2)

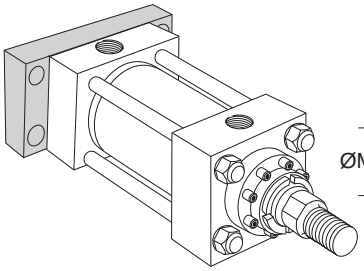

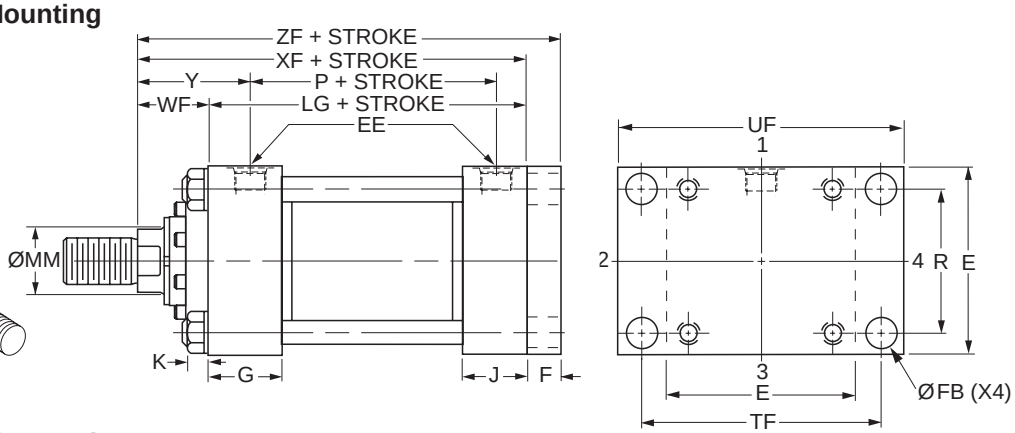


## Style H – Dimensional and Mounting Data

| Bore Ø | Rod No. | MM Rod Ø | E | EE | | F | FB Ø | G | J | K Max. | R | TF | UF | WF | Y | Add Stroke | | | |
|---|---|---|---|---|---|---|---|---|---|---|---|---|---|---|---|---|---|---|---|
| | | | | NPTF[1] | SAE[2] | | | | | | | | | | | LG | P | XF | ZF |
| 7.00 | 1 (std.) | 3.000 | 8.50 | 1 1/4 | 20 | 1.00 | 1.19 | 2.75 | 2.75 | 1.16 | 6.58 | 10.63 | 12.63 | 2.25 | 3.69 | 8.50 | 5.63 | 10.75 | 11.75 |
| | 2 | 5.000 | 8.50 | 1 1/4 | 20 | 1.00 | 1.19 | 2.75 | 2.75 | 1.16 | 6.58 | 10.63 | 12.63 | 2.25 | 3.69 | 8.50 | 5.63 | 10.75 | 11.75 |
| | 3 | 3.500 | 8.50 | 1 1/4 | 20 | 1.00 | 1.19 | 2.75 | 2.75 | 1.16 | 6.58 | 10.63 | 12.63 | 2.25 | 3.69 | 8.50 | 5.63 | 10.75 | 11.75 |
| | 4 | 4.000 | 8.50 | 1 1/4 | 20 | 1.00 | 1.19 | 2.75 | 2.75 | 1.16 | 6.58 | 10.63 | 12.63 | 2.25 | 3.69 | 8.50 | 5.63 | 10.75 | 11.75 |
| | 5 | 4.500 | 8.50 | 1 1/4 | 20 | 1.00 | 1.19 | 2.75 | 2.75 | 1.16 | 6.58 | 10.63 | 12.63 | 2.25 | 3.69 | 8.50 | 5.63 | 10.75 | 11.75 |
| 8.00 | 1 (std.) | 3.500 | 9.50 | 1 1/2 | 24 | 1.00 | 1.31 | 3.00 | 3.00 | 1.28 | 7.50 | 11.81 | 14.00 | 2.25 | 3.81 | 9.50 | 6.38 | 11.75 | 12.75 |
| | 2 | 5.500 | 9.50 | 1 1/2 | 24 | 1.00 | 1.31 | 3.00 | 3.00 | 1.28 | 7.50 | 11.81 | 14.00 | 2.25 | 3.81 | 9.50 | 6.38 | 11.75 | 12.75 |
| | 3 | 4.000 | 9.50 | 1 1/2 | 24 | 1.00 | 1.31 | 3.00 | 3.00 | 1.28 | 7.50 | 11.81 | 14.00 | 2.25 | 3.81 | 9.50 | 6.38 | 11.75 | 12.75 |
| | 4 | 4.500 | 9.50 | 1 1/2 | 24 | 1.00 | 1.31 | 3.00 | 3.00 | 1.28 | 7.50 | 11.81 | 14.00 | 2.25 | 3.81 | 9.50 | 6.38 | 11.75 | 12.75 |
| | 5 | 5.000 | 9.50 | 1 1/2 | 24 | 1.00 | 1.31 | 3.00 | 3.00 | 1.28 | 7.50 | 11.81 | 14.00 | 2.25 | 3.81 | 9.50 | 6.38 | 11.75 | 12.75 |

[1]NPTF ports are available at no extra charge.
[2]SAE straight thread ports are standard and are indicated by port number.

## Style H – Maximum Operating Pressure / 3H

| Bore Ø | Max. psi Pull[3] | | | | |
|---|---|---|---|---|---|
| | Rod Code | | | | |
| | 1 | 2 | 3 | 4 | 5 |
| 7.00 | 2000 | 3000 | 2000 | 2500 | 2800 |
| 8.00 | 1700 | 2500 | 1700 | 1800 | 2200 |

[3]Maximum pressure rating – pull application.

View Table of Contents

## Cap Square Flange Mounting
Style HB
(NFPA Style MF6)

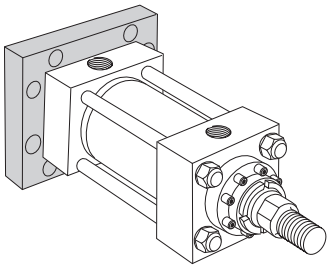

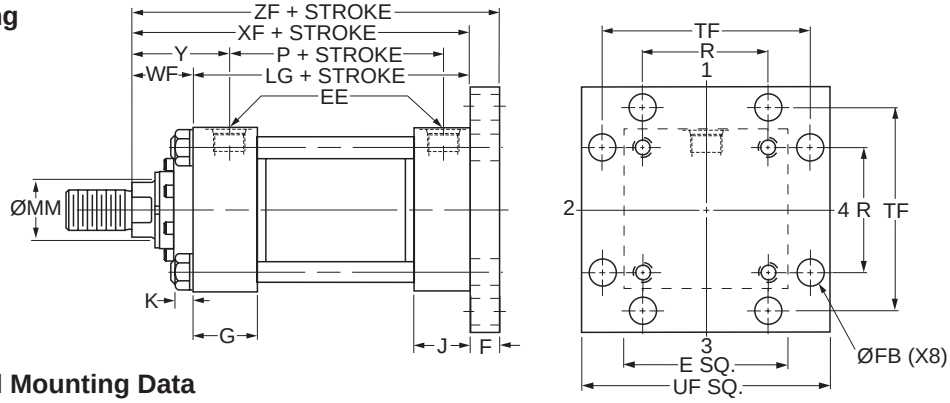


### Style HB – Dimensional and Mounting Data

| Bore Ø | Rod No. | MM Rod Ø | E | EE NPTF[1] | EE SAE[2] | F | FB Ø | G | J | K Max. | R | TF | UF | WF | Y | Add Stroke LG | Add Stroke P | Add Stroke XF | Add Stroke ZF |
|---|---|---|---|---|---|---|---|---|---|---|---|---|---|---|---|---|---|---|---|
| 7.00 | 1 (std.) | 3.000 | 8.50 | 1 1/4 | 20 | 1.00 | 1.19 | 2.75 | 2.75 | 1.16 | 6.58 | 10.63 | 12.63 | 2.25 | 3.69 | 8.50 | 5.63 | 10.75 | 11.75 |
| | 2 | 5.000 | 8.50 | 1 1/4 | 20 | 1.00 | 1.19 | 2.75 | 2.75 | 1.16 | 6.58 | 10.63 | 12.63 | 2.25 | 3.69 | 8.50 | 5.63 | 10.75 | 11.75 |
| | 3 | 3.500 | 8.50 | 1 1/4 | 20 | 1.00 | 1.19 | 2.75 | 2.75 | 1.16 | 6.58 | 10.63 | 12.63 | 2.25 | 3.69 | 8.50 | 5.63 | 10.75 | 11.75 |
| | 4 | 4.000 | 8.50 | 1 1/4 | 20 | 1.00 | 1.19 | 2.75 | 2.75 | 1.16 | 6.58 | 10.63 | 12.63 | 2.25 | 3.69 | 8.50 | 5.63 | 10.75 | 11.75 |
| | 5 | 4.500 | 8.50 | 1 1/4 | 20 | 1.00 | 1.19 | 2.75 | 2.75 | 1.16 | 6.58 | 10.63 | 12.63 | 2.25 | 3.69 | 8.50 | 5.63 | 10.75 | 11.75 |
| 8.00 | 1 (std.) | 3.500 | 9.50 | 1 1/2 | 24 | 1.00 | 1.31 | 3.00 | 3.00 | 1.28 | 7.50 | 11.81 | 14.00 | 2.25 | 3.81 | 9.50 | 6.38 | 11.75 | 12.75 |
| | 2 | 5.500 | 9.50 | 1 1/2 | 24 | 1.00 | 1.31 | 3.00 | 3.00 | 1.28 | 7.50 | 11.81 | 14.00 | 2.25 | 3.81 | 9.50 | 6.38 | 11.75 | 12.75 |
| | 3 | 4.000 | 9.50 | 1 1/2 | 24 | 1.00 | 1.31 | 3.00 | 3.00 | 1.28 | 7.50 | 11.81 | 14.00 | 2.25 | 3.81 | 9.50 | 6.38 | 11.75 | 12.75 |
| | 4 | 4.500 | 9.50 | 1 1/2 | 24 | 1.00 | 1.31 | 3.00 | 3.00 | 1.28 | 7.50 | 11.81 | 14.00 | 2.25 | 3.81 | 9.50 | 6.38 | 11.75 | 12.75 |
| | 5 | 5.000 | 9.50 | 1 1/2 | 24 | 1.00 | 1.31 | 3.00 | 3.00 | 1.28 | 7.50 | 11.81 | 14.00 | 2.25 | 3.81 | 9.50 | 6.38 | 11.75 | 12.75 |

[1]NPTF ports are available at no extra charge.
[2]SAE straight thread ports are standard and are indicated by port number.

## Cap Rectangular Mounting
Style HH
(NFPA Style ME6)

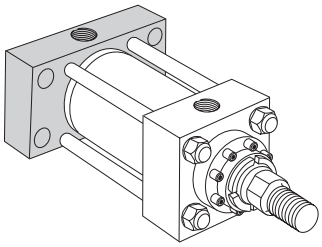

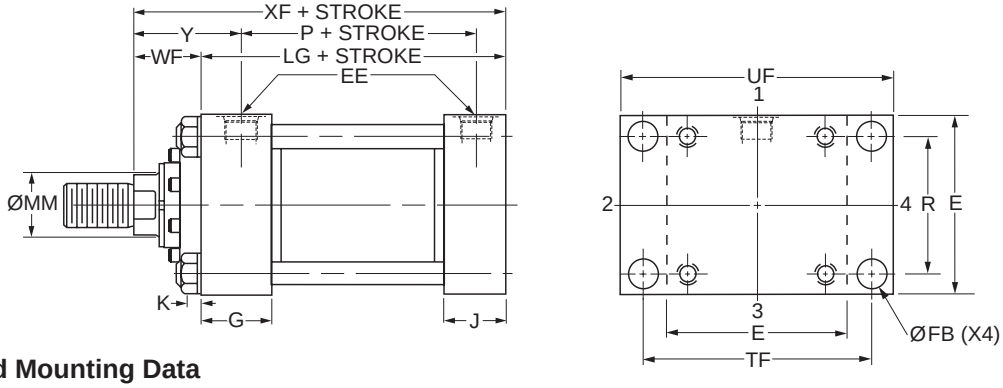


### Style HH – Dimensional and Mounting Data

| Bore Ø | Rod No | MM Rod Ø | E | EE NPTF[1] | EE SAE[2] | FB Ø | G | J | K Max. | R | TF | UF | WF | Y | Add Stroke LG | Add Stroke P | Add Stroke XF |
|---|---|---|---|---|---|---|---|---|---|---|---|---|---|---|---|---|---|
| 7.00 | 1 (std.) | 3.000 | 8.50 | 1 1/4 | 20 | 1.19 | 2.75 | 2.75 | 1.16 | 6.58 | 10.63 | 12.63 | 2.25 | 3.69 | 8.50 | 5.63 | 10.75 |
| | 2 | 5.000 | 8.50 | 1 1/4 | 20 | 1.19 | 2.75 | 2.75 | 1.16 | 6.58 | 10.63 | 12.63 | 2.25 | 3.69 | 8.50 | 5.63 | 10.75 |
| | 3 | 3.500 | 8.50 | 1 1/4 | 20 | 1.19 | 2.75 | 2.75 | 1.16 | 6.58 | 10.63 | 12.63 | 2.25 | 3.69 | 8.50 | 5.63 | 10.75 |
| | 4 | 4.000 | 8.50 | 1 1/4 | 20 | 1.19 | 2.75 | 2.75 | 1.16 | 6.58 | 10.63 | 12.63 | 2.25 | 3.69 | 8.50 | 5.63 | 10.75 |
| | 5 | 4.500 | 8.50 | 1 1/4 | 20 | 1.19 | 2.75 | 2.75 | 1.16 | 6.58 | 10.63 | 12.63 | 2.25 | 3.69 | 8.50 | 5.63 | 10.75 |
| 8.00 | 1 (std.) | 3.500 | 9.50 | 1 1/2 | 24 | 1.31 | 3.00 | 3.00 | 1.28 | 7.50 | 11.81 | 14.00 | 2.25 | 3.81 | 9.50 | 6.38 | 11.75 |
| | 2 | 5.500 | 9.50 | 1 1/2 | 24 | 1.31 | 3.00 | 3.00 | 1.28 | 7.50 | 11.81 | 14.00 | 2.25 | 3.81 | 9.50 | 6.38 | 11.75 |
| | 3 | 4.000 | 9.50 | 1 1/2 | 24 | 1.31 | 3.00 | 3.00 | 1.28 | 7.50 | 11.81 | 14.00 | 2.25 | 3.81 | 9.50 | 6.38 | 11.75 |
| | 4 | 4.500 | 9.50 | 1 1/2 | 24 | 1.31 | 3.00 | 3.00 | 1.28 | 7.50 | 11.81 | 14.00 | 2.25 | 3.81 | 9.50 | 6.38 | 11.75 |
| | 5 | 5.000 | 9.50 | 1 1/2 | 24 | 1.31 | 3.00 | 3.00 | 1.28 | 7.50 | 11.81 | 14.00 | 2.25 | 3.81 | 9.50 | 6.38 | 11.75 |

[1]NPTF ports are available at no extra charge.
[2]SAE straight thread ports are standard and are indicated by port number.

View Table of Contents



## Side Lug Mounting

Style C
(NFPA Style MS2)

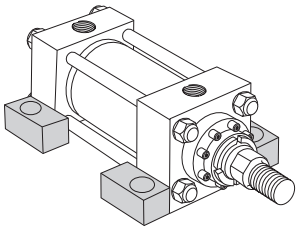

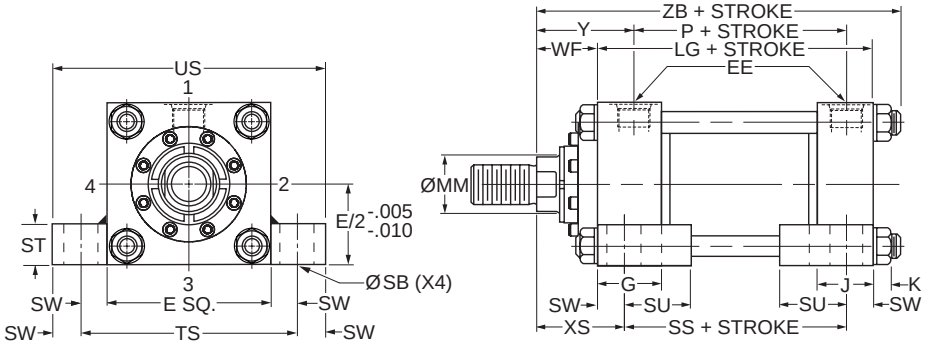


### Style C – Dimensional and Mounting Data

| Bore Ø | Rod No. | MM Rod Ø | E | EE NPTF[1] | EE SAE[2] | G | J | K Max. | SB Ø | ST | SU | SW | TS | US | WF | XS | Y | Add Stroke LG | Add Stroke P | Add Stroke SS | Add Stroke ZB Max. |
|---|---|---|---|---|---|---|---|---|---|---|---|---|---|---|---|---|---|---|---|---|---|
| 7.00 | 1 (std.) | 3.000 | 8.50 | 1 1/4 | 20 | 2.75 | 2.75 | 1.16 | 1.56 | 1.75 | 2.88 | 1.38 | 11.25 | 14.00 | 2.25 | 3.63 | 3.69 | 8.50 | 5.63 | 5.75 | 12.16 |
| | 2 | 5.000 | 8.50 | 1 1/4 | 20 | 2.75 | 2.75 | 1.16 | 1.56 | 1.75 | 2.88 | 1.38 | 11.25 | 14.00 | 2.25 | 3.63 | 3.69 | 8.50 | 5.63 | 5.75 | 12.16 |
| | 3 | 3.500 | 8.50 | 1 1/4 | 20 | 2.75 | 2.75 | 1.16 | 1.56 | 1.75 | 2.88 | 1.38 | 11.25 | 14.00 | 2.25 | 3.63 | 3.69 | 8.50 | 5.63 | 5.75 | 12.16 |
| | 4 | 4.000 | 8.50 | 1 1/4 | 20 | 2.75 | 2.75 | 1.16 | 1.56 | 1.75 | 2.88 | 1.38 | 11.25 | 14.00 | 2.25 | 3.63 | 3.69 | 8.50 | 5.63 | 5.75 | 12.16 |
| | 5 | 4.500 | 8.50 | 1 1/4 | 20 | 2.75 | 2.75 | 1.16 | 1.56 | 1.75 | 2.88 | 1.38 | 11.25 | 14.00 | 2.25 | 3.63 | 3.69 | 8.50 | 5.63 | 5.75 | 12.16 |
| 8.00 | 1 (std.) | 3.500 | 9.50 | 1 1/2 | 24 | 3.00 | 3.00 | 1.28 | 1.56 | 1.75 | 2.88 | 1.38 | 12.25 | 15.00 | 2.25 | 3.63 | 3.81 | 9.50 | 6.38 | 6.75 | 13.28 |
| | 2 | 5.500 | 9.50 | 1 1/2 | 24 | 3.00 | 3.00 | 1.28 | 1.56 | 1.75 | 2.88 | 1.38 | 12.25 | 15.00 | 2.25 | 3.63 | 3.81 | 9.50 | 6.38 | 6.75 | 13.28 |
| | 3 | 4.000 | 9.50 | 1 1/2 | 24 | 3.00 | 3.00 | 1.28 | 1.56 | 1.75 | 2.88 | 1.38 | 12.25 | 15.00 | 2.25 | 3.63 | 3.81 | 9.50 | 6.38 | 6.75 | 13.28 |
| | 4 | 4.500 | 9.50 | 1 1/2 | 24 | 3.00 | 3.00 | 1.28 | 1.56 | 1.75 | 2.88 | 1.38 | 12.25 | 15.00 | 2.25 | 3.63 | 3.81 | 9.50 | 6.38 | 6.75 | 13.28 |
| | 5 | 5.000 | 9.50 | 1 1/2 | 24 | 3.00 | 3.00 | 1.28 | 1.56 | 1.75 | 2.88 | 1.38 | 12.25 | 15.00 | 2.25 | 3.63 | 3.81 | 9.50 | 6.38 | 6.75 | 13.28 |

[1]NPTF ports are available at no extra charge.
[2]SAE straight thread ports are standard and are indicated by port number.

## Side Tapped Mounting

Style F
(NFPA Style MS4)

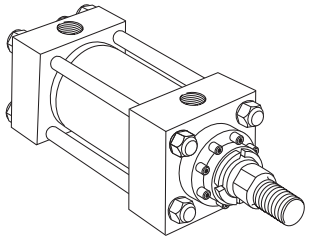

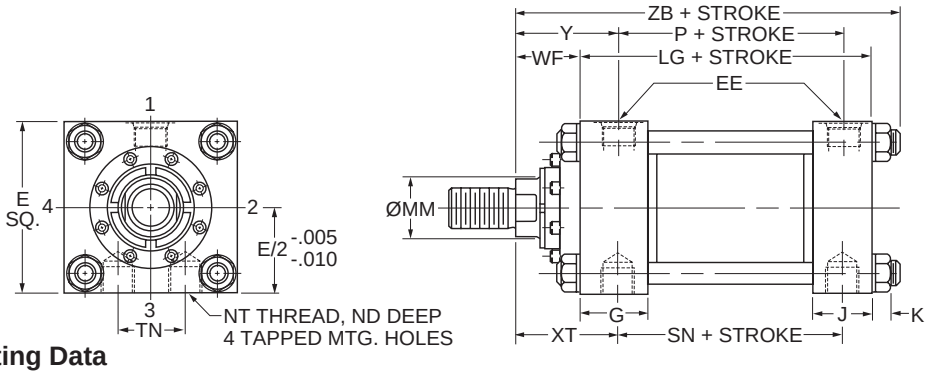


### Style F – Dimensional and Mounting Data

| Bore Ø | Rod No. | MM Rod Ø | E | EE NPTF[1] | EE SAE[2] | G | J | K Max. | ND | NT | TN | WF | XT | Y | Add Stroke LG | Add Stroke P | Add Stroke SN | Add Stroke ZB Max. |
|---|---|---|---|---|---|---|---|---|---|---|---|---|---|---|---|---|---|---|
| 7.00 | 1 (std.) | 3.000 | 8.50 | 1 1/4 | 20 | 2.75 | 2.75 | 1.16 | 1.13 | 1 1/2-6 | 3.75 | 2.25 | 3.81 | 3.69 | 8.50 | 5.63 | 5.88 | 12.16 |
| | 2 | 5.000 | 8.50 | 1 1/4 | 20 | 2.75 | 2.75 | 1.16 | 1.13 | 1 1/2-6 | 3.75 | 2.25 | 3.81 | 3.69 | 8.50 | 5.63 | 5.88 | 12.16 |
| | 3 | 3.500 | 8.50 | 1 1/4 | 20 | 2.75 | 2.75 | 1.16 | 1.13 | 1 1/2-6 | 3.75 | 2.25 | 3.81 | 3.69 | 8.50 | 5.63 | 5.88 | 12.16 |
| | 4 | 4.000 | 8.50 | 1 1/4 | 20 | 2.75 | 2.75 | 1.16 | 1.13 | 1 1/2-6 | 3.75 | 2.25 | 3.81 | 3.69 | 8.50 | 5.63 | 5.88 | 12.16 |
| | 5 | 4.500 | 8.50 | 1 1/4 | 20 | 2.75 | 2.75 | 1.16 | 1.13 | 1 1/2-6 | 3.75 | 2.25 | 3.81 | 3.69 | 8.50 | 5.63 | 5.88 | 12.16 |
| 8.00 | 1 (std.) | 3.500 | 9.50 | 1 1/2 | 24 | 3.00 | 3.00 | 1.28 | 1.50 | 1 1/2-6 | 4.25 | 2.25 | 3.94 | 3.81 | 9.50 | 6.38 | 6.63 | 13.28 |
| | 2 | 5.500 | 9.50 | 1 1/2 | 24 | 3.00 | 3.00 | 1.28 | 1.50 | 1 1/2-6 | 4.25 | 2.25 | 3.94 | 3.81 | 9.50 | 6.38 | 6.63 | 13.28 |
| | 3 | 4.000 | 9.50 | 1 1/2 | 24 | 3.00 | 3.00 | 1.28 | 1.50 | 1 1/2-6 | 4.25 | 2.25 | 3.94 | 3.81 | 9.50 | 6.38 | 6.63 | 13.28 |
| | 4 | 4.500 | 9.50 | 1 1/2 | 24 | 3.00 | 3.00 | 1.28 | 1.50 | 1 1/2-6 | 4.25 | 2.25 | 3.94 | 3.81 | 9.50 | 6.38 | 6.63 | 13.28 |
| | 5 | 5.000 | 9.50 | 1 1/2 | 24 | 3.00 | 3.00 | 1.28 | 1.50 | 1 1/2-6 | 4.25 | 2.25 | 3.94 | 3.81 | 9.50 | 6.38 | 6.63 | 13.28 |

[1]NPTF ports are available at no extra charge.
[2]SAE straight thread ports are standard and are indicated by port number.

View Table of Contents

## Cap Fixed Clevis Mounting
Style BB
(NFPA Style MP1)

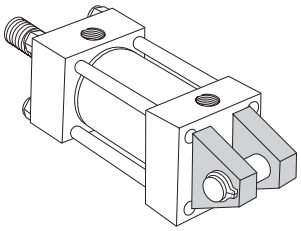

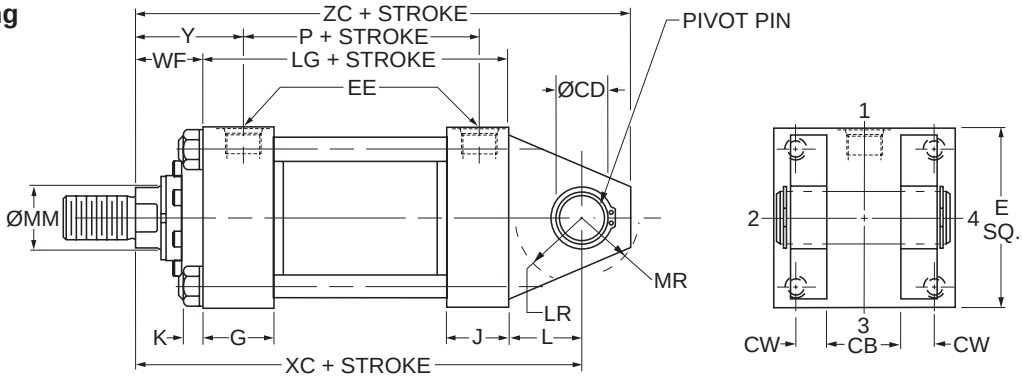


### Style BB – Dimensional and Mounting Data

| Bore Ø | Rod No. | MM Rod Ø | CB | CD[3] Ø +.000 -.002 | CW | E | EE NPTF[1] | EE SAE[2] | G | J | K Max. | L | LR | MR |
|---|---|---|---|---|---|---|---|---|---|---|---|---|---|---|
| 7.00 | 1 (std.) | 3.000 | 3.00 | 2.501 | 1.50 | 8.50 | 1 1/4 | 20 | 2.75 | 2.75 | 1.16 | 3.00 | 2.75 | 2.88 |
| | 2 | 5.000 | 3.00 | 2.501 | 1.50 | 8.50 | 1 1/4 | 20 | 2.75 | 2.75 | 1.16 | 3.00 | 2.75 | 2.88 |
| | 3 | 3.500 | 3.00 | 2.501 | 1.50 | 8.50 | 1 1/4 | 20 | 2.75 | 2.75 | 1.16 | 3.00 | 2.75 | 2.88 |
| | 4 | 4.000 | 3.00 | 2.501 | 1.50 | 8.50 | 1 1/4 | 20 | 2.75 | 2.75 | 1.16 | 3.00 | 2.75 | 2.88 |
| | 5 | 4.500 | 3.00 | 2.501 | 1.50 | 8.50 | 1 1/4 | 20 | 2.75 | 2.75 | 1.16 | 3.00 | 2.75 | 2.88 |
| 8.00 | 1 (std.) | 3.500 | 3.00 | 3.001 | 1.50 | 9.50 | 1 1/2 | 24 | 3.00 | 3.00 | 1.28 | 3.25 | 3.25 | 3.13 |
| | 2 | 5.500 | 3.00 | 3.001 | 1.50 | 9.50 | 1 1/2 | 24 | 3.00 | 3.00 | 1.28 | 3.25 | 3.25 | 3.13 |
| | 3 | 4.000 | 3.00 | 3.001 | 1.50 | 9.50 | 1 1/2 | 24 | 3.00 | 3.00 | 1.28 | 3.25 | 3.25 | 3.13 |
| | 4 | 4.500 | 3.00 | 3.001 | 1.50 | 9.50 | 1 1/2 | 24 | 3.00 | 3.00 | 1.28 | 3.25 | 3.25 | 3.13 |
| | 5 | 5.000 | 3.00 | 3.001 | 1.50 | 9.50 | 1 1/2 | 24 | 3.00 | 3.00 | 1.28 | 3.25 | 3.25 | 3.13 |

[1]NPTF ports are available at no extra charge.
[2]SAE straight thread ports are standard and are indicated by port number.
[3]Diameter CD is pin diameter.

### Style BB – Dimensional and Mounting Data

| Bore Ø | Rod No. | MM Rod Ø | WF | Y | Add Stroke LG | Add Stroke P | Add Stroke XC | Add Stroke ZC |
|---|---|---|---|---|---|---|---|---|
| 7.00 | 1 (std.) | 3.000 | 2.25 | 3.69 | 8.50 | 5.63 | 13.75 | 16.25 |
| | 2 | 5.000 | 2.25 | 3.69 | 8.50 | 5.63 | 13.75 | 16.25 |
| | 3 | 3.500 | 2.25 | 3.69 | 8.50 | 5.63 | 13.75 | 16.25 |
| | 4 | 4.000 | 2.25 | 3.69 | 8.50 | 5.63 | 13.75 | 16.25 |
| | 5 | 4.500 | 2.25 | 3.69 | 8.50 | 5.63 | 13.75 | 16.25 |
| 8.00 | 1 (std.) | 3.500 | 2.25 | 3.81 | 9.50 | 6.38 | 15.00 | 17.75 |
| | 2 | 5.500 | 2.25 | 3.81 | 9.50 | 6.38 | 15.00 | 17.75 |
| | 3 | 4.000 | 2.25 | 3.81 | 9.50 | 6.38 | 15.00 | 17.75 |
| | 4 | 4.500 | 2.25 | 3.81 | 9.50 | 6.38 | 15.00 | 17.75 |
| | 5 | 5.000 | 2.25 | 3.81 | 9.50 | 6.38 | 15.00 | 17.75 |

View Table of Contents



## Head Trunnion Mounting

Style D
(NFPA Style MT1)

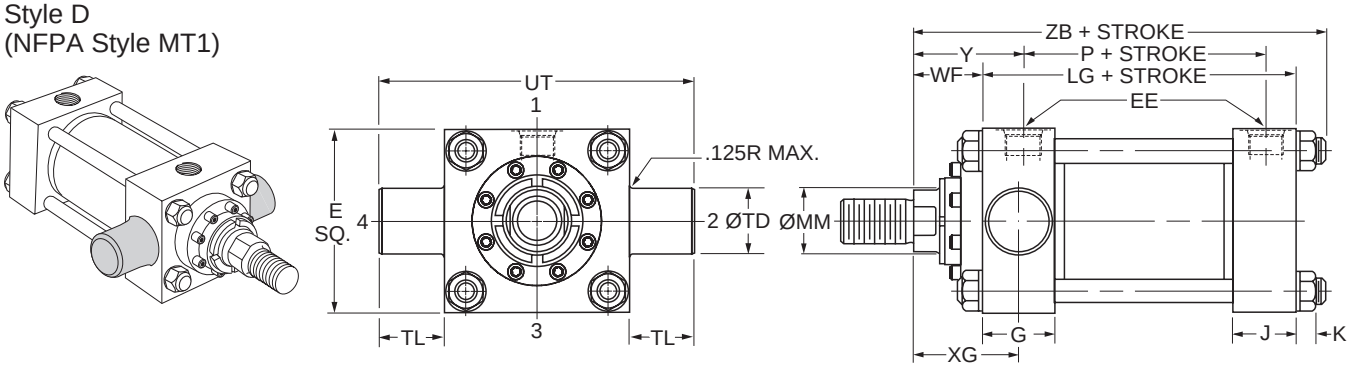


### Style D – Dimensional and Mounting Data

| Bore Ø | Rod No. | MM Rod Ø | E | EE | | G | J | K Max. | TD Ø +.000 -.002 | TL | UT | WF | Y | XG |
|---|---|---|---|---|---|---|---|---|---|---|---|---|---|---|
| | | | | NPTF[1] | SAE[2] | | | | | | | | | |
| 7.00 | 1 (std.) | 3.000 | 8.50 | 1 1/4 | 20 | 2.75 | 2.75 | 1.16 | 2.500 | 2.50 | 13.50 | 2.25 | 3.69 | 3.63 |
| | 2 | 5.000 | 8.50 | 1 1/4 | 20 | 2.75 | 2.75 | 1.16 | 2.500 | 2.50 | 13.50 | 2.25 | 3.69 | 3.63 |
| | 3 | 3.500 | 8.50 | 1 1/4 | 20 | 2.75 | 2.75 | 1.16 | 2.500 | 2.50 | 13.50 | 2.25 | 3.69 | 3.63 |
| | 4 | 4.000 | 8.50 | 1 1/4 | 20 | 2.75 | 2.75 | 1.16 | 2.500 | 2.50 | 13.50 | 2.25 | 3.69 | 3.63 |
| | 5 | 4.500 | 8.50 | 1 1/4 | 20 | 2.75 | 2.75 | 1.16 | 2.500 | 2.50 | 13.50 | 2.25 | 3.69 | 3.63 |
| 8.00 | 1 (std.) | 3.500 | 9.50 | 1 1/2 | 24 | 3.00 | 3.00 | 1.28 | 3.000 | 3.00 | 15.50 | 2.25 | 3.81 | 3.75 |
| | 2 | 5.500 | 9.50 | 1 1/2 | 24 | 3.00 | 3.00 | 1.28 | 3.000 | 3.00 | 15.50 | 2.25 | 3.81 | 3.75 |
| | 3 | 4.000 | 9.50 | 1 1/2 | 24 | 3.00 | 3.00 | 1.28 | 3.000 | 3.00 | 15.50 | 2.25 | 3.81 | 3.75 |
| | 4 | 4.500 | 9.50 | 1 1/2 | 24 | 3.00 | 3.00 | 1.28 | 3.000 | 3.00 | 15.50 | 2.25 | 3.81 | 3.75 |
| | 5 | 5.000 | 9.50 | 1 1/2 | 24 | 3.00 | 3.00 | 1.28 | 3.000 | 3.00 | 15.50 | 2.25 | 3.81 | 3.75 |

[1]NPTF ports are available at no extra charge.
[2]SAE straight thread ports are standard and are indicated by port number.

### Style D – Dimensional and Mounting Data

| Bore Ø | Rod No. | MM Rod Ø | Add Stroke | | |
|---|---|---|---|---|---|
| | | | LG | P | ZB Max. |
| 7.00 | 1 (std.) | 3.000 | 8.50 | 5.63 | 12.16 |
| | 2 | 5.000 | 8.50 | 5.63 | 12.16 |
| | 3 | 3.500 | 8.50 | 5.63 | 12.16 |
| | 4 | 4.000 | 8.50 | 5.63 | 12.16 |
| | 5 | 4.500 | 8.50 | 5.63 | 12.16 |
| 8.00 | 1 (std.) | 3.500 | 9.50 | 6.38 | 13.28 |
| | 2 | 5.500 | 9.50 | 6.38 | 13.28 |
| | 3 | 4.000 | 9.50 | 6.38 | 13.28 |
| | 4 | 4.500 | 9.50 | 6.38 | 13.28 |
| | 5 | 5.000 | 9.50 | 6.38 | 13.28 |

View Table of Contents

## Cap Trunnion Mounting
Style DB
(NFPA Style MT2)

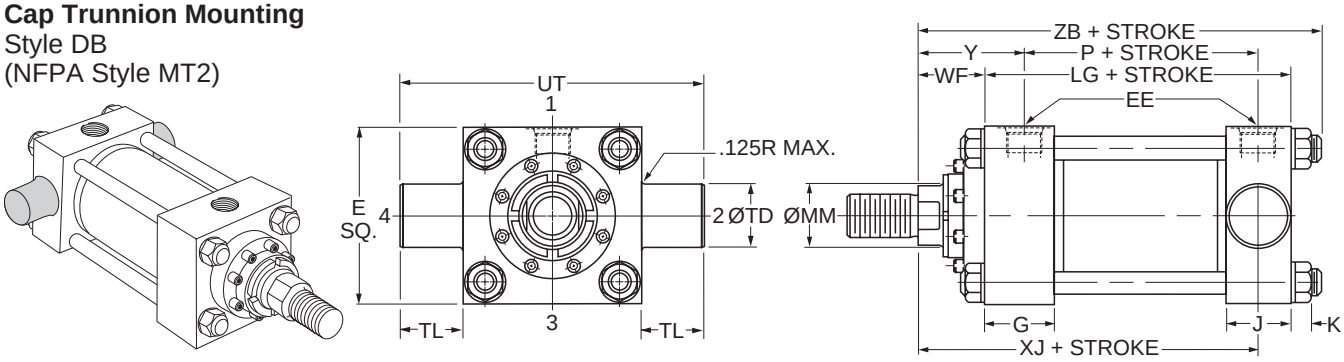


### Style DB – Dimensional and Mounting Data

| Bore Ø | Rod No. | MM Rod Ø | E | EE | | G | J | K Max. | TD Ø +.000 -.002 | TL | UT | WF | Y |
|---|---|---|---|---|---|---|---|---|---|---|---|---|---|
| | | | | NPTF[1] | SAE[2] | | | | | | | | |
| 7.00 | 1 (std.) | 3.000 | 8.50 | 1 1/4 | 20 | 2.75 | 2.75 | 1.16 | 2.500 | 2.50 | 13.50 | 2.25 | 3.69 |
| | 2 | 5.000 | 8.50 | 1 1/4 | 20 | 2.75 | 2.75 | 1.16 | 2.500 | 2.50 | 13.50 | 2.25 | 3.69 |
| | 3 | 3.500 | 8.50 | 1 1/4 | 20 | 2.75 | 2.75 | 1.16 | 2.500 | 2.50 | 13.50 | 2.25 | 3.69 |
| | 4 | 4.000 | 8.50 | 1 1/4 | 20 | 2.75 | 2.75 | 1.16 | 2.500 | 2.50 | 13.50 | 2.25 | 3.69 |
| | 5 | 4.500 | 8.50 | 1 1/4 | 20 | 2.75 | 2.75 | 1.16 | 2.500 | 2.50 | 13.50 | 2.25 | 3.69 |
| 8.00 | 1 (std.) | 3.500 | 9.50 | 1 1/2 | 24 | 3.00 | 3.00 | 1.28 | 3.000 | 3.00 | 15.50 | 2.25 | 3.81 |
| | 2 | 5.500 | 9.50 | 1 1/2 | 24 | 3.00 | 3.00 | 1.28 | 3.000 | 3.00 | 15.50 | 2.25 | 3.81 |
| | 3 | 4.000 | 9.50 | 1 1/2 | 24 | 3.00 | 3.00 | 1.28 | 3.000 | 3.00 | 15.50 | 2.25 | 3.81 |
| | 4 | 4.500 | 9.50 | 1 1/2 | 24 | 3.00 | 3.00 | 1.28 | 3.000 | 3.00 | 15.50 | 2.25 | 3.81 |
| | 5 | 5.000 | 9.50 | 1 1/2 | 24 | 3.00 | 3.00 | 1.28 | 3.000 | 3.00 | 15.50 | 2.25 | 3.81 |

[1]NPTF ports are available at no extra charge.
[2]SAE straight thread ports are standard and are indicated by port number.

### Style DB – Dimensional and Mounting Data

| Bore Ø | Rod No. | MM Rod Ø | Add Stroke | | | |
|---|---|---|---|---|---|---|
| | | | LG | P | XJ | ZB Max |
| 7.00 | 1 (std.) | 3.000 | 8.50 | 5.63 | 9.38 | 12.16 |
| | 2 | 5.000 | 8.50 | 5.63 | 9.38 | 12.16 |
| | 3 | 3.500 | 8.50 | 5.63 | 9.38 | 12.16 |
| | 4 | 4.000 | 8.50 | 5.63 | 9.38 | 12.16 |
| | 5 | 4.500 | 8.50 | 5.63 | 9.38 | 12.16 |
| 8.00 | 1 (std.) | 3.500 | 9.50 | 6.38 | 10.25 | 13.28 |
| | 2 | 5.500 | 9.50 | 6.38 | 10.25 | 13.28 |
| | 3 | 4.000 | 9.50 | 6.38 | 10.25 | 13.28 |
| | 4 | 4.500 | 9.50 | 6.38 | 10.25 | 13.28 |
| | 5 | 5.000 | 9.50 | 6.38 | 10.25 | 13.28 |

View Table of Contents



## Intermediate Fixed Trunnion Mounting

Style DD
(NFPA Former Standard Style MT4)

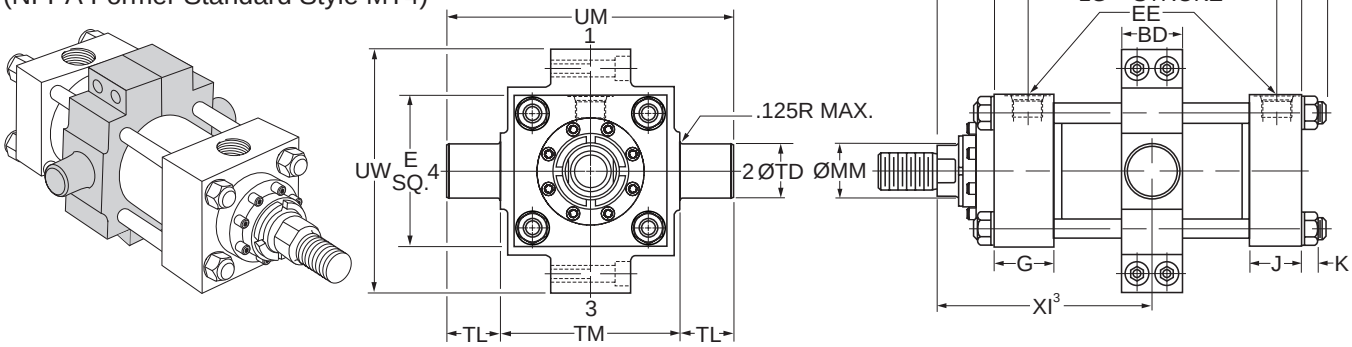


### Style DD – Dimensional and Mounting Data

| Bore Ø | Rod No. | MM Rod Ø | BD | E | EE NPTF[1] | EE SAE[2] | G | J | K Max. | TD Ø +.000 -.002 | TL | TM | UM | UW | WF | Y |
|---|---|---|---|---|---|---|---|---|---|---|---|---|---|---|---|---|
| 7.00 | 1 (std.) | 3.000 | 3.00 | 8.50 | 1 1/4 | 20 | 2.75 | 2.75 | 1.16 | 2.500 | 2.50 | 9.75 | 14.75 | 11.50 | 2.25 | 3.69 |
| | 2 | 5.000 | 3.00 | 8.50 | 1 1/4 | 20 | 2.75 | 2.75 | 1.16 | 2.500 | 2.50 | 9.75 | 14.75 | 11.50 | 2.25 | 3.69 |
| | 3 | 3.500 | 3.00 | 8.50 | 1 1/4 | 20 | 2.75 | 2.75 | 1.16 | 2.500 | 2.50 | 9.75 | 14.75 | 11.50 | 2.25 | 3.69 |
| | 4 | 4.000 | 3.00 | 8.50 | 1 1/4 | 20 | 2.75 | 2.75 | 1.16 | 2.500 | 2.50 | 9.75 | 14.75 | 11.50 | 2.25 | 3.69 |
| | 5 | 4.500 | 3.00 | 8.50 | 1 1/4 | 20 | 2.75 | 2.75 | 1.16 | 2.500 | 2.50 | 9.75 | 14.75 | 11.50 | 2.25 | 3.69 |
| 8.00 | 1 (std.) | 3.500 | 3.50 | 9.50 | 1 1/2 | 24 | 3.00 | 3.00 | 1.28 | 3.000 | 3.00 | 11.00 | 17.00 | 13.38 | 2.25 | 3.81 |
| | 2 | 5.500 | 3.50 | 9.50 | 1 1/2 | 24 | 3.00 | 3.00 | 1.28 | 3.000 | 3.00 | 11.00 | 17.00 | 13.38 | 2.25 | 3.81 |
| | 3 | 4.000 | 3.50 | 9.50 | 1 1/2 | 24 | 3.00 | 3.00 | 1.28 | 3.000 | 3.00 | 11.00 | 17.00 | 13.38 | 2.25 | 3.81 |
| | 4 | 4.500 | 3.50 | 9.50 | 1 1/2 | 24 | 3.00 | 3.00 | 1.28 | 3.000 | 3.00 | 11.00 | 17.00 | 13.38 | 2.25 | 3.81 |
| | 5 | 5.000 | 3.50 | 9.50 | 1 1/2 | 24 | 3.00 | 3.00 | 1.28 | 3.000 | 3.00 | 11.00 | 17.00 | 13.38 | 2.25 | 3.81 |

[1]NPTF ports are available at no extra charge.
[2]SAE straight thread ports are standard and are indicated by port number.

### Style DD – Dimensional and Mounting Data

| Bore Ø | Rod No. | MM Rod Ø | Style DD Minimum Stroke | Minimum XI[3] Styles 4, 8 & 9 | Minimum XI[3] Style 55 | Add Stroke LG | Add Stroke P | Maximum XI[4] Styles 4, 8 & 9 | Maximum XI[4] Style 55 | ZB Max. |
|---|---|---|---|---|---|---|---|---|---|---|
| 7.00 | 1 (std.) | 3.000 | 0.13 | 6.56 | 9.19 | 8.50 | 5.63 | 6.44 | 9.06 | 12.16 |
| | 2 | 5.000 | 0.13 | 6.56 | 10.94 | 8.50 | 5.63 | 6.44 | 10.81 | 12.16 |
| | 3 | 3.500 | 0.13 | 6.56 | 9.94 | 8.50 | 5.63 | 6.44 | 9.81 | 12.16 |
| | 4 | 4.000 | 0.13 | 6.56 | 10.06 | 8.50 | 5.63 | 6.44 | 9.94 | 12.16 |
| | 5 | 4.500 | 0.13 | 6.56 | 10.81 | 8.50 | 5.63 | 6.44 | 10.69 | 12.16 |
| 8.00 | 1 (std.) | 3.500 | 0.13 | 7.06 | 10.44 | 9.50 | 6.38 | 6.94 | 10.31 | 13.28 |
| | 2 | 5.500 | 0.13 | 7.06 | 12.31 | 9.50 | 6.38 | 6.94 | 12.19 | 13.28 |
| | 3 | 4.000 | 0.13 | 7.06 | 10.56 | 9.50 | 6.38 | 6.94 | 10.44 | 13.28 |
| | 4 | 4.500 | 0.13 | 7.06 | 11.31 | 9.50 | 6.38 | 6.94 | 11.19 | 13.28 |
| | 5 | 5.000 | 0.13 | 7.06 | 11.44 | 9.50 | 6.38 | 6.94 | 11.31 | 13.28 |

[3]Dimension XI to be specified by customer. Reference point for rod end Style 55 is end of piston rod.
[4]Dimensions shown are valid for standard WF and WG dimension.

View Table of Contents

## Heavy Duty Intermediate Fixed Trunnion Mounting

Style DE
(NFPA Current Standard Style MT4)

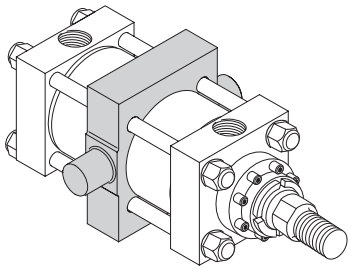

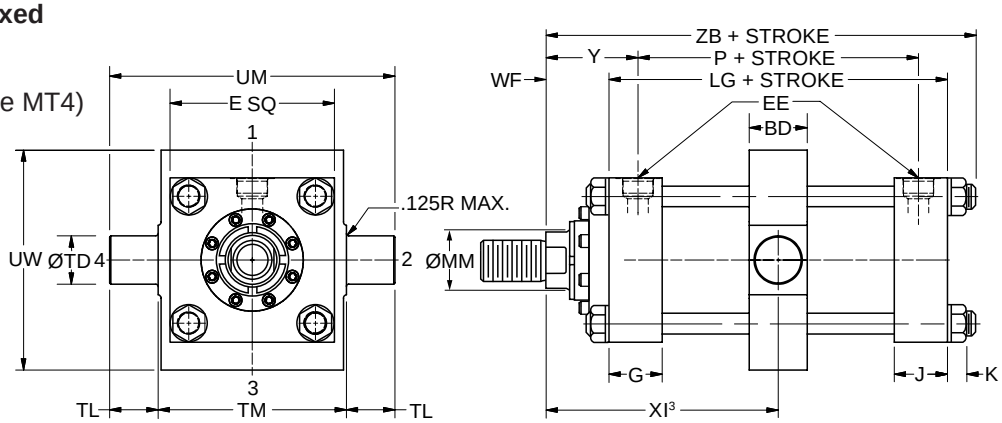


### Style DE – Dimensional and Mounting Data

| Bore Ø | Rod No. | MM Rod Ø | BD | E | EE NPTF[1] | EE SAE[2] | G | J | K Max. | TD Ø +.000 -.002 | TL | TM | UM | UW | WF | Y |
|---|---|---|---|---|---|---|---|---|---|---|---|---|---|---|---|---|
| 7.00 | 1 (std.) | 3.000 | 4.000 | 8.50 | 1 1/4 | 20 | 2.75 | 2.75 | 1.16 | 3.500 | 2.50 | 9.75 | 14.75 | 11.38 | 2.25 | 3.69 |
| | 2 | 5.000 | 4.000 | 8.50 | 1 1/4 | 20 | 2.75 | 2.75 | 1.16 | 3.500 | 2.50 | 9.75 | 14.75 | 11.38 | 2.25 | 3.69 |
| | 3 | 3.500 | 4.000 | 8.50 | 1 1/4 | 20 | 2.75 | 2.75 | 1.16 | 3.500 | 2.50 | 9.75 | 14.75 | 11.38 | 2.25 | 3.69 |
| | 4 | 4.000 | 4.000 | 8.50 | 1 1/4 | 20 | 2.75 | 2.75 | 1.16 | 3.500 | 2.50 | 9.75 | 14.75 | 11.38 | 2.25 | 3.69 |
| | 5 | 4.500 | 4.000 | 8.50 | 1 1/4 | 20 | 2.75 | 2.75 | 1.16 | 3.500 | 2.50 | 9.75 | 14.75 | 11.38 | 2.25 | 3.69 |
| 8.00 | 1 (std.) | 3.500 | 4.500 | 9.50 | 1 1/2 | 24 | 3.00 | 3.00 | 1.28 | 4.000 | 3.00 | 11.00 | 17.00 | 12.00 | 2.25 | 3.81 |
| | 2 | 5.500 | 4.500 | 9.50 | 1 1/2 | 24 | 3.00 | 3.00 | 1.28 | 4.000 | 3.00 | 11.00 | 17.00 | 12.00 | 2.25 | 3.81 |
| | 3 | 4.000 | 4.500 | 9.50 | 1 1/2 | 24 | 3.00 | 3.00 | 1.28 | 4.000 | 3.00 | 11.00 | 17.00 | 12.00 | 2.25 | 3.81 |
| | 4 | 4.500 | 4.500 | 9.50 | 1 1/2 | 24 | 3.00 | 3.00 | 1.28 | 4.000 | 3.00 | 11.00 | 17.00 | 12.00 | 2.25 | 3.81 |
| | 5 | 5.000 | 4.500 | 9.50 | 1 1/2 | 24 | 3.00 | 3.00 | 1.28 | 4.000 | 3.00 | 11.00 | 17.00 | 12.00 | 2.25 | 3.81 |

[1]NPTF ports are available at no extra charge.
[2]SAE straight thread ports are standard and are indicated by port number.

### Style DE – Dimensional and Mounting Data

| Bore Ø | Rod No. | MM Rod Ø | Style DE Minimum Stroke | Minimum XI[3] Styles 4, 8 & 9 | Minimum XI[3] Style 55 | Add Stroke LG | Add Stroke P | Maximum XI[4] Styles 4, 8 & 9 | Maximum XI[4] Style 55 | ZB Max. |
|---|---|---|---|---|---|---|---|---|---|---|
| 7.00 | 1 (std.) | 3.000 | 1.13 | 7.06 | 9.69 | 8.50 | 5.63 | 5.94 | 8.56 | 12.16 |
| | 2 | 5.000 | 1.13 | 7.06 | 11.44 | 8.50 | 5.63 | 5.94 | 10.31 | 12.16 |
| | 3 | 3.500 | 1.13 | 7.06 | 10.44 | 8.50 | 5.63 | 5.94 | 9.31 | 12.16 |
| | 4 | 4.000 | 1.13 | 7.06 | 10.56 | 8.50 | 5.63 | 5.94 | 9.44 | 12.16 |
| | 5 | 4.500 | 1.13 | 7.06 | 11.31 | 8.50 | 5.63 | 5.94 | 10.19 | 12.16 |
| 8.00 | 1 (std.) | 3.500 | 1.13 | 7.56 | 10.94 | 9.50 | 6.38 | 6.44 | 9.81 | 13.28 |
| | 2 | 5.500 | 1.13 | 7.56 | 12.81 | 9.50 | 6.38 | 6.44 | 11.69 | 13.28 |
| | 3 | 4.000 | 1.13 | 7.56 | 11.06 | 9.50 | 6.38 | 6.44 | 9.94 | 13.28 |
| | 4 | 4.500 | 1.13 | 7.56 | 11.81 | 9.50 | 6.38 | 6.44 | 10.69 | 13.28 |
| | 5 | 5.000 | 1.13 | 7.56 | 11.94 | 9.50 | 6.38 | 6.44 | 10.81 | 13.28 |

[3]Dimension XI to be specified by customer. Reference point for rod end Style 55 is end of piston rod.
[4]Dimensions shown are valid for standard WF and WG dimension.

View Table of Contents



## Spherical Bearing Mounting
Style SE

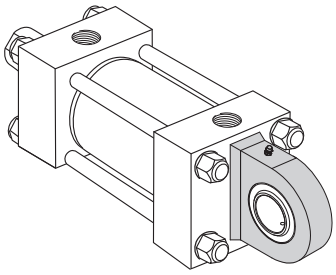

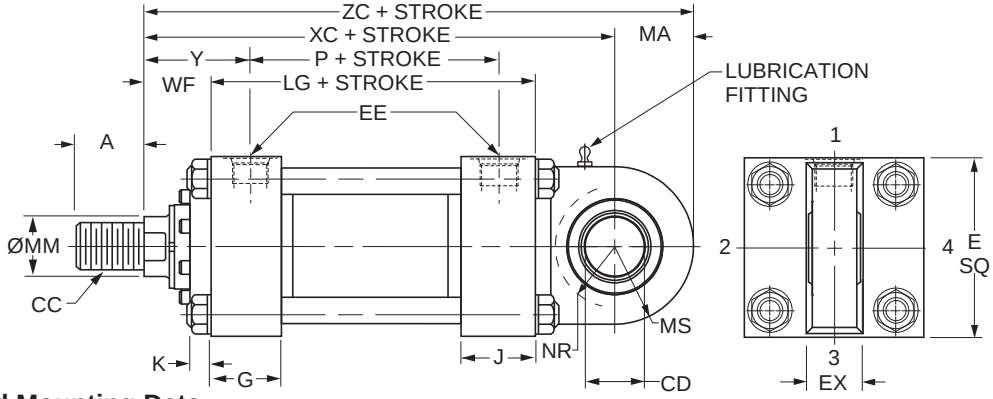


## Style SE — Dimensional and Mounting Data

| Bore Ø | Rod No. | MM Rod Ø | A | CD[3] Ø +0.0000 -0.0005 | E | EX | EE NPTF[1] | EE SAE[2] | G | J | K Max. | MS | MA | NR | WF | Y |
|---|---|---|---|---|---|---|---|---|---|---|---|---|---|---|---|---|
| 7.00 | 1 (std.) | 3.000 | 3.50 | 3.5000 | 8.50 | 3.06 | 1 1/4 | 20 | 2.75 | 2.75 | 1.16 | 4.00 | 4.00 | 3.68 | 2.25 | 3.69 |
| | 2 | 5.000 | 3.50 | 3.5000 | 8.50 | 3.06 | 1 1/4 | 20 | 2.75 | 2.75 | 1.16 | 4.00 | 4.00 | 3.68 | 2.25 | 3.69 |
| | 3 | 3.500 | 3.50 | 3.5000 | 8.50 | 3.06 | 1 1/4 | 20 | 2.75 | 2.75 | 1.16 | 4.00 | 4.00 | 3.68 | 2.25 | 3.69 |
| | 4 | 4.000 | 3.50 | 3.5000 | 8.50 | 3.06 | 1 1/4 | 20 | 2.75 | 2.75 | 1.16 | 4.00 | 4.00 | 3.68 | 2.25 | 3.69 |
| | 5 | 4.500 | 3.50 | 3.5000 | 8.50 | 3.06 | 1 1/4 | 20 | 2.75 | 2.75 | 1.16 | 4.00 | 4.00 | 3.68 | 2.25 | 3.69 |
| 8.00 | 1 (std.) | 3.500 | 3.50 | 4.0000 | 9.50 | 3.50 | 1 1/2 | 24 | 3.00 | 3.00 | 1.28 | 4.50 | 4.50 | 4.13 | 2.25 | 3.81 |
| | 2 | 5.500 | 3.50 | 4.0000 | 9.50 | 3.50 | 1 1/2 | 24 | 3.00 | 3.00 | 1.28 | 4.50 | 4.50 | 4.13 | 2.25 | 3.81 |
| | 3 | 4.000 | 3.50 | 4.0000 | 9.50 | 3.50 | 1 1/2 | 24 | 3.00 | 3.00 | 1.28 | 4.50 | 4.50 | 4.13 | 2.25 | 3.81 |
| | 4 | 4.500 | 3.50 | 4.0000 | 9.50 | 3.50 | 1 1/2 | 24 | 3.00 | 3.00 | 1.28 | 4.50 | 4.50 | 4.13 | 2.25 | 3.81 |
| | 5 | 5.000 | 3.50 | 4.0000 | 9.50 | 3.50 | 1 1/2 | 24 | 3.00 | 3.00 | 1.28 | 4.50 | 4.50 | 4.13 | 2.25 | 3.81 |

[1]NPTF ports are available at no extra charge.
[2]SAE straight thread ports are standard and are indicated by port number.
[3]Dimension CD is pin diameter.

## Style SE – Dimensional and Mounting Data

| Bore Ø | Rod No. | MM Rod Ø | Thread Style 8 CC[4] | A | Add Stroke LG | P | XC | XL | ZC |
|---|---|---|---|---|---|---|---|---|---|
| 7.00 | 1 (std.) | 3.000 | 2 3/4-12 | 3.50 | 8.50 | 5.63 | 15.25 | 23.25 | 19.25 |
| | 2 | 5.000 | [4] | [4] | 8.50 | 5.63 | 15.25 | 23.25 | 19.25 |
| | 3 | 3.500 | [4] | [4] | 8.50 | 5.63 | 15.25 | 23.25 | 19.25 |
| | 4 | 4.000 | [4] | [4] | 8.50 | 5.63 | 15.25 | 23.25 | 19.25 |
| | 5 | 4.500 | [4] | [4] | 8.50 | 5.63 | 15.25 | 23.25 | 19.25 |
| 8.00 | 1 (std.) | 3.500 | 3 1/4-12 | 3.50 | 9.50 | 6.38 | 16.75 | 25.25 | 21.25 |
| | 2 | 5.500 | [4] | [4] | 9.50 | 6.38 | 16.75 | 25.25 | 21.25 |
| | 3 | 4.000 | [4] | [4] | 9.50 | 6.38 | 16.75 | 25.25 | 21.25 |
| | 4 | 4.500 | [4] | [4] | 9.50 | 6.38 | 16.75 | 25.25 | 21.25 |
| | 5 | 5.000 | [4] | [4] | 9.50 | 6.38 | 16.75 | 25.25 | 21.25 |

[4] To match pin diameter in rod eye and cap, when an oversize rod is required, specify rod end style '3', 'CC' thread and 'A' thread length for the standard rod diameter (Rod No. 1 for the bore), and 'WF' for the oversize rod. Order the rod eye and clevis bracket for the required bore size from the tables on the Style SE Spherical Bearing Accessories page.

## Style SE – Recommended maximum swivel angle on each side of the cylinder centerline.

| Bore Ø | Head End Mounted Angle a | Head End Mounted Tan. of a | Cap End Mounted Angle a | Cap End Mounted Tan. of a |
|---|---|---|---|---|
| 7.00 | 3.00° | 0.052 | 3.00° | 0.052 |
| 8.00 | 3.00° | 0.052 | 3.00° | 0.052 |

Note: Dimension X is the maximum off center mounting of the cylinder. To determine dimension X for various stroke lengths multiply the distance between pivot pin holes by tangent of angle a. For extended position use X = XL + 2X stroke.

## Mounting Information

Head End Mounting

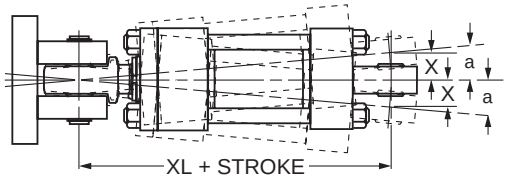


Cap End Mounting

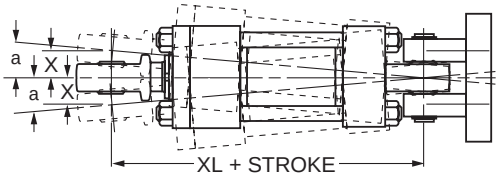

View Table of Contents

## Double Rod Cylinder
Style K

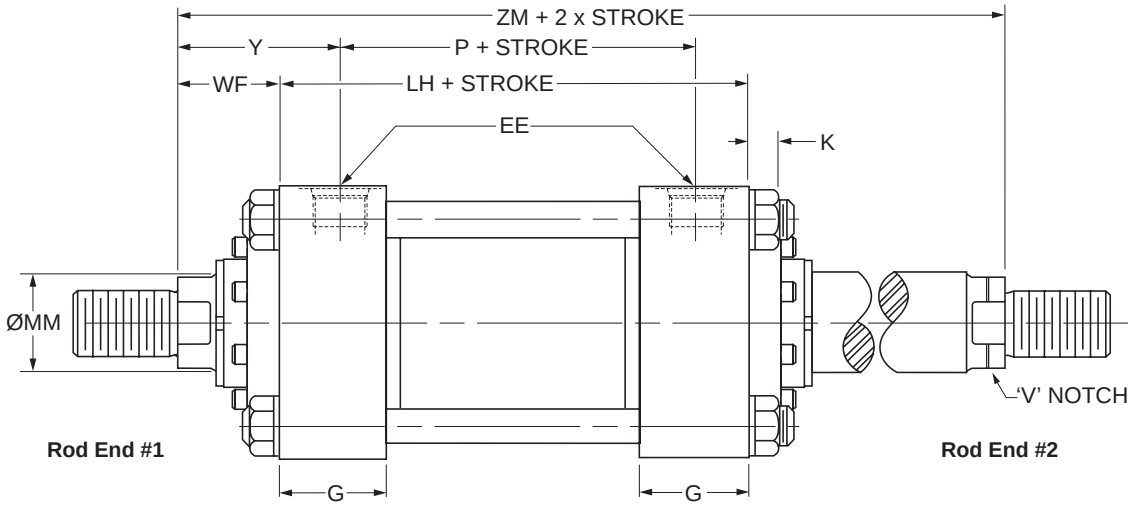


## Double Rod End Mounting Styles

See Mounting Groups page in Section H for guidance on double rod end cylinder mounting style selection.

| Mounting Styles for Single Rod Models | Mounting Styles for Corresponding Double Rod Models[1] | | Dimensions Shown on This Page Supplement Dimensions on 7.00" - 8.00" Bore Pages Listed Below |
|---|---|---|---|
| | Load Connected To Rod On Cylinder Mounting End | Load Connected To Rod Opposite Cylinder Mounting End | |
| TB | KTB | KTC | 34 |
| TD | KTD | KTD | 34 |
| J | KJ | KH | 35 |
| JB | KJB | KHB | 36 |
| JJ | KJJ | KHH | 37 |
| C | KC | KC | 40 |
| F | KF | KF | 40 |
| D | KD | KDB | 42 |
| DD | KDD[2] | KDD[2] | 44 |
| DE | KDE[2] | KDE[2] | 45 |

[1] Connect load to piston rod without 'V' notch. If only one end of the Double Rod Cylinder is to be cushioned, be sure to clearly specify which end this will be.

[2] Specify XI dimension for Styles DD & DE from #1 rod end (without 'V' notch).

| Bore Ø | Rod No. | MM Rod Ø | WF | Add Stroke | | | Add 2X Stroke |
|---|---|---|---|---|---|---|---|
| | | | | LH | SNK | SSK | ZM |
| 7.00 | 1 (std.) | 3.00 | 2.25 | 8.50 | 5.38 | 5.75 | 13.00 |
| | 2 | 5.00 | 2.25 | 8.50 | 5.38 | 5.75 | 13.00 |
| | 3 | 3.50 | 2.25 | 8.50 | 5.38 | 5.75 | 13.00 |
| | 4 | 4.00 | 2.25 | 8.50 | 5.38 | 5.75 | 13.00 |
| | 5 | 4.50 | 2.25 | 8.50 | 5.38 | 5.75 | 13.00 |
| 8.00 | 1 (std.) | 3.50 | 2.25 | 9.50 | 6.13 | 6.75 | 14.00 |
| | 2 | 5.50 | 2.25 | 9.50 | 6.13 | 6.75 | 14.00 |
| | 3 | 4.00 | 2.25 | 9.50 | 6.13 | 6.75 | 14.00 |
| | 4 | 4.50 | 2.25 | 9.50 | 6.13 | 6.75 | 14.00 |
| | 5 | 5.00 | 2.25 | 9.50 | 6.13 | 6.75 | 14.00 |
| Replaces On single rod mounting styles: | | | | LG | SN | SS | – |
| | | | | All Mtg. Styles | F | C | All Mtg. Styles |

## How to Use Double Rod Cylinder Dimension Drawings

To determine dimensions for a double rod cylinder, first refer to the desired single rod mounting style cylinder shown on preceding pages of this catalog. (See table above.) After selecting necessary dimensions from that drawing, return to this page supplement the single rod dimensions with those shown on drawing at right and dimension table below. Note that double rod cylinders have a head (Dim. G) at both ends and that dimension LH replaces LG. The double rod dimensions differ from, or are in addition to those for single rod cylinders shown on preceding pages and provide the information needed to completely dimension a double rod cylinder.

On a double rod cylinder where the two rod ends are different, be sure to clearly state which rod end is to be assembled at which end. Port position 1 is standard. If other than standard, specify pos. 2, 3 or 4 when viewed from rod end #1 only. See port position information in Section H.

View Table of Contents



# Notes

View Table of Contents

# Section C

## Series 2HD 1.50"-6.00" Bore / 3HD 7.00" & 8.00" Bore Heavy Duty Hydraulic Cylinders


| | 2HD 1.50"-6.00" Bore | 3HD 7.00" & 8.00" Bore |
|---|---|---|
| Performance | 50 | 50 |
| Specifications, Mounting Styles | 51 | 51 |
| Rod End Styles and Dimensions | 52-53 | 71 |
| TD, T, TB, TC Mount Dimensions | 54 | 72 |
| J Mount Dimensions | 55 | 73 |
| JB Mount Dimensions | 56 | 74 |
| JJ Mount Dimensions | 57 | 75 |
| H Mount Dimensions | 58 | 76 |
| HB Mount Dimensions | 59 | 77 |
| HH Mount Dimensions | 60 | 77 |
| C Mount Dimensions | 61 | 78 |
| F Mount Dimensions | 62 | 78 |
| BB Mount Dimensions | 63 | 79 |
| D Mount Dimensions | 64 | 80 |
| DB Mount Dimensions | 65 | 81 |
| DD Mount Dimensions | 66 | 82 |
| DE Mount Dimensions | 67 | 83 |
| Style SB Spherical Bearing Mounting | 68 | – |
| Style SE Spherical Bearing Mounting | 69 | 84 |
| Double Rod Cylinders / Gland Retention | 70 | 85 |

View Table of Contents

# Parker Series 2HD 1.50"-6.00" and 3HD 7.00" & 8.00" Bore Heavy Duty Hydraulic Cylinders

Series 2HD 1.50"-6.00" and 3HD 7.00" & 8.00" Bore cylinders offer increased durability and ease of service with the addition of a bolt-on rod gland. The gland assembly is externally removable without cylinder disassembly. The rod seal has multiple sealing edges to produce “dry rod” performance and it is molded from a special polyurethane material that is extremely resistant to abrasion and extrusion.



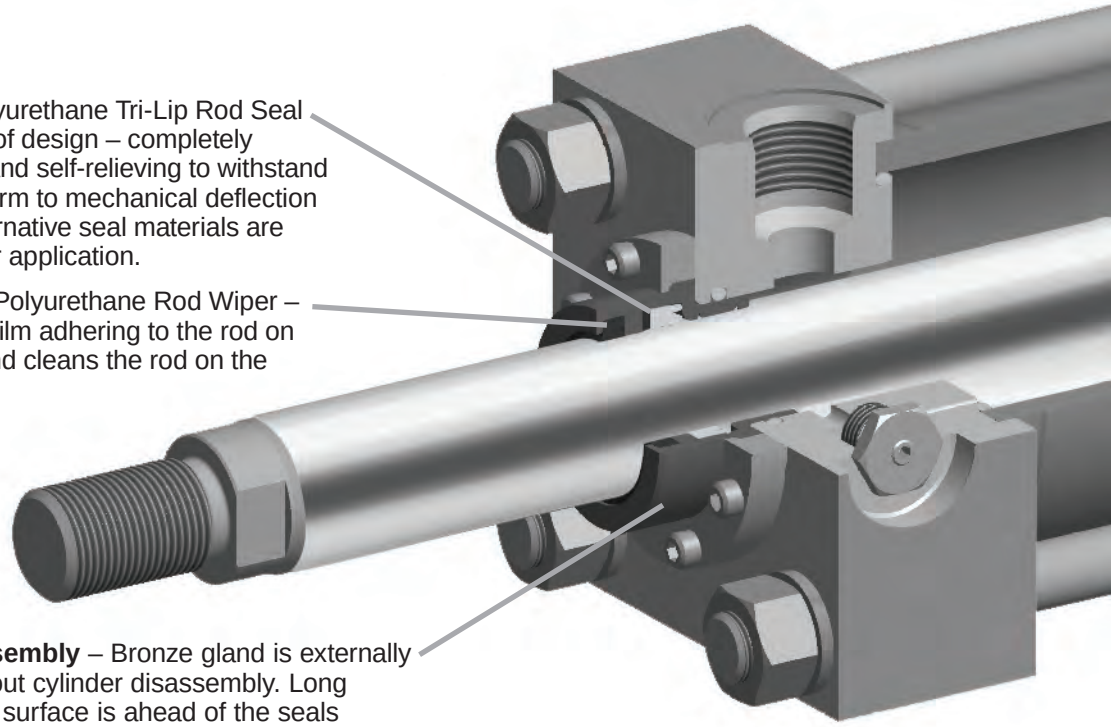

**Primary Seal** – Polyurethane Tri-Lip Rod Seal is a proven leak proof design – completely self-compensating and self-relieving to withstand variations and conform to mechanical deflection that may occur. Alternative seal materials are available to suit your application.

**Secondary Seal** – Polyurethane Rod Wiper – wipes clean any oil film adhering to the rod on the extend stroke and cleans the rod on the return stroke.

**Rod Gland Assembly** – Bronze gland is externally removable without cylinder disassembly. Long inboard bearing surface is ahead of the seals assuring lubrication by cylinder operating fluid.

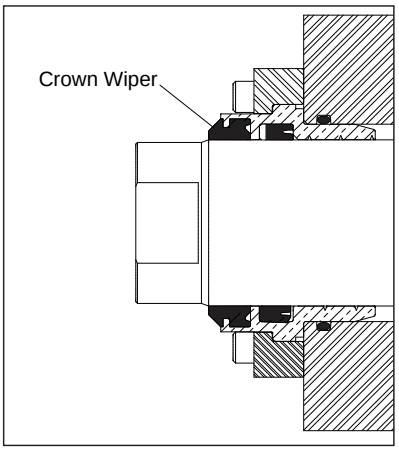


**Parker Crown Wiper™ for Series 2HD 1.50"-6.00" and 7.00" & 8.00" bore 3HD** – For environments that contain fine abrasive particulate specify the Crown Wiper option. The Crown Wiper is a proven superior alternative to piston rod end boots or metallic wipers that can ingest particulate. It has a sharp leading edge to effectively clean the piston rod and a beveled shape to prevent contaminant intrusion by channeling it away from the gland. It also acts as a secondary seal to wipe clean any oil film adhering to the rod on the extend stroke.

View Table of Contents

## Standard Specifications

- Heavy Duty Service – ANSI/(NFPA) T3.6.7R3 - 2009 Specifications and Mounting Dimension Standards
- Standard Construction – Square Head – Tie Rod Design
- Nominal Pressure – 3000 psi[1]
- Standard Fluid – Hydraulic Oil
- Standard Temperature – −10°F to +165°F[2]
- Bore Diameters – 1.50" through 8.00" (Larger sizes available)

*In line with our policy of continuing product improvement, specifications in this catalog are subject to change.*

Note: Series 2HD and 3HD Hydraulic Cylinders fully meet ANSI/(NFPA) T3.6.7R3 - 2009 Specifications and Mounting Dimension Standards for Square Head Industrial Fluid Power Cylinders.

- Piston Rod Diameter – 0.625" through 5.500"
- Mounting Styles – 19 standard styles at various application ratings
- Strokes – Available in any practical stroke length
- Cushions – Optional at either end or both ends of stroke. "Float Check" standard at cap end of 1.50" - 6.00" bore.
- Rod Ends – Four Standard Choices – Specials to Order

[1] If hydraulic operating pressure exceeds 3000 psi, send application data for engineering evaluation and recommendation. See Section H for actual design factors.

[2] See Section H for higher temperature service.

## Available Mounting Styles

Basic

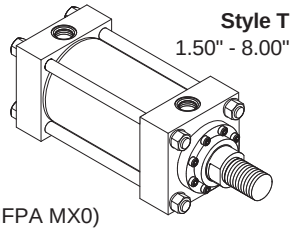

**Style T**
1.50" - 8.00"
(NFPA MX0)

Tie Rods Extended Head End

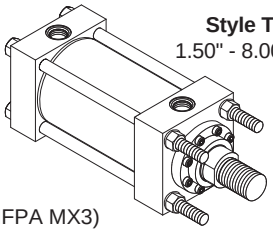

**Style TB**
1.50" - 8.00"
(NFPA MX3)

Tie Rods Extended Cap End

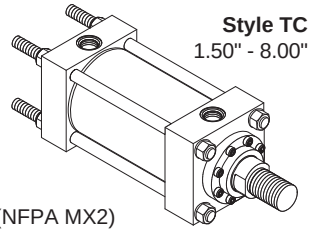

**Style TC**
1.50" - 8.00"
(NFPA MX2)

Tie Rods Extended Both Ends

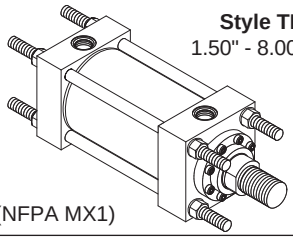

**Style TD**
1.50" - 8.00"
(NFPA MX1)

Head Rectangular Flange

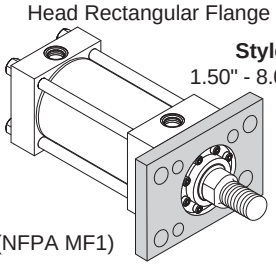

**Style J**
1.50" - 8.00"
(NFPA MF1)

Head Square Flange

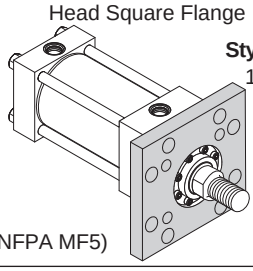

**Style JB**
1.50" - 8.00"
(NFPA MF5)

Head Rectangular

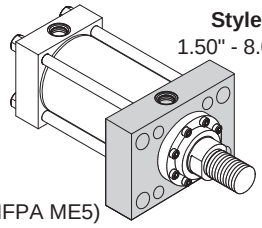

**Style JJ**
1.50" - 8.00"
(NFPA ME5)

Cap Rectangular Flange

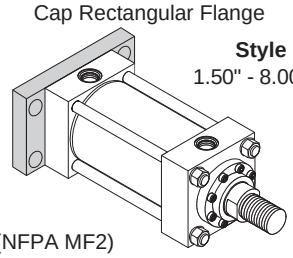

**Style H**
1.50" - 8.00"
(NFPA MF2)

Cap Square Flange

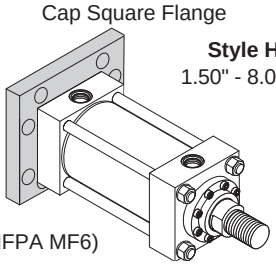

**Style HB**
1.50" - 8.00"
(NFPA MF6)

Cap Rectangular

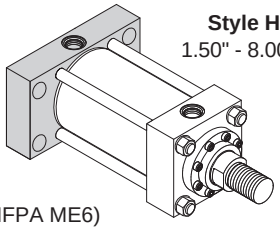

**Style HH**
1.50" - 8.00"
(NFPA ME6)

Side Lug

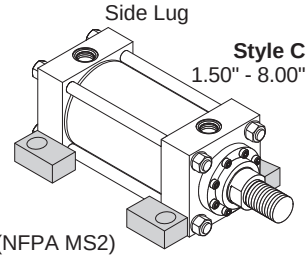

**Style C**
1.50" - 8.00"
(NFPA MS2)

Side Tapped

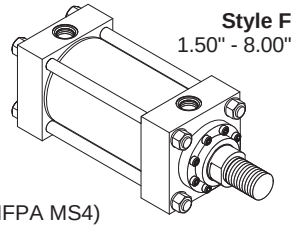

**Style F**
1.50" - 8.00"
(NFPA MS4)

Cap Fixed Clevis

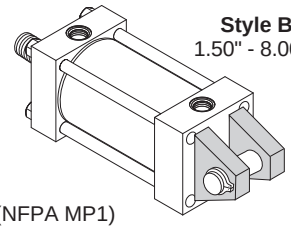

**Style BB**
1.50" - 8.00"
(NFPA MP1)

Head Trunnion

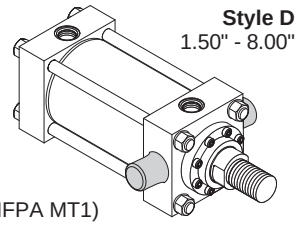

**Style D**
1.50" - 8.00"
(NFPA MT1)

Cap Trunnion

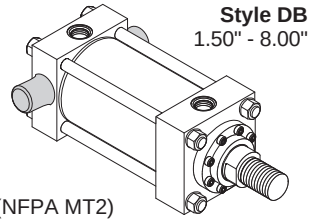

**Style DB**
1.50" - 8.00"
(NFPA MT2)

Intermediate Fixed Trunnion

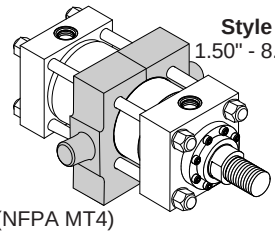

**Style DD**
1.50" - 8.00"
(NFPA MT4)

HD Intermediate Fixed Trunnion

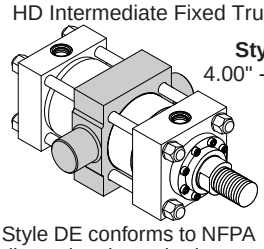

**Style DE**
4.00" - 8.00"
Style DE conforms to NFPA dimensional standard.

Spherical Bearing

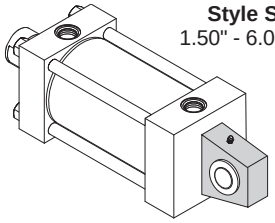

**Style SB**
1.50" - 6.00"

HD Spherical Bearing

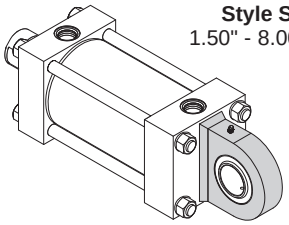

**Style SE**
1.50" - 8.00"

Double Rod Cylinders

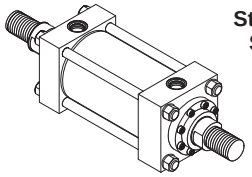

**Style KT Shown**
1.50" - 8.00"
Most of the above illustrated mounting styles are available in double rod cylinders.

View Table of Contents

## Rod End Dimensions – circular bolt-on retainer construction

**Thread Style 4 (NFPA Style SM)**
**Small Male**

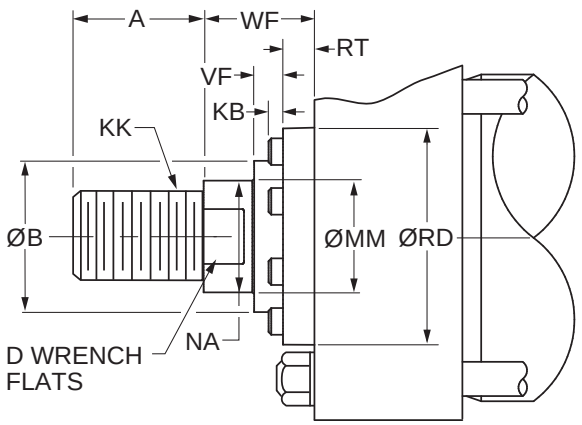


**Thread Style 8 (NFPA Style IM)**
**Intermediate Male**

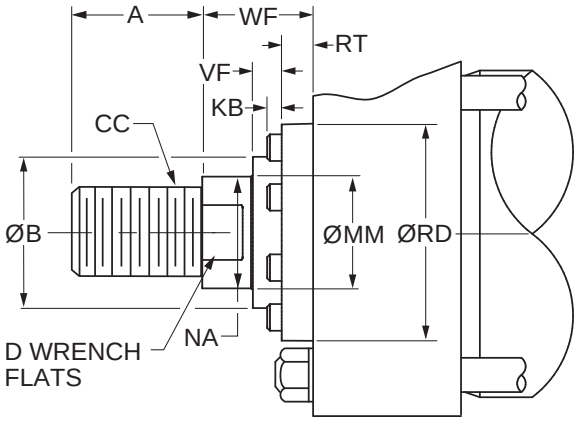


See Gland Retention page to determine which bore, rod and mounting style combinations have circular bolt-on retainers and which have tie rod retained glands.

## Rod End Dimensions

| Bore Ø | Rod No. | MM Rod Ø | Thread Style 8 CC | Thread Style 4 KK | A | B Ø +.000 -.002 | D | F | KB | NA | RD | RT | V | VF | W | WF |
|---|---|---|---|---|---|---|---|---|---|---|---|---|---|---|---|---|
| 1.50 | 1 (Std.) | 0.625 | 1/2-20 | 7/16-20 | 0.75 | 1.124 | 0.50 | 0.38 | 0.03 | 0.56 | 1.94 | 0.36 | 0.25 | 0.27 | 0.63 | 1.00 |
| | 2 | 1.000 | 7/8-14 | 3/4-16 | 1.13 | 1.499 | 0.88 | 0.38 | 0.03 | 0.94 | 2.38 | 0.36 | 0.50 | 0.52 | 1.00 | 1.38 |
| 2.00 | 1 (Std.) | 1.000 | 7/8-14 | 3/4-16 | 1.13 | 1.499 | 0.88 | 0.63 | 0.03 | 0.94 | 2.38 | 0.36 | 0.25 | 0.52 | 0.75 | 1.38 |
| | 2 | 1.375 | 1 1/4-12 | 1-14 | 1.63 | 1.999 | 1.13 | 0.63 | 0.19 | 1.31 | 2.87 | 0.36 | 0.38 | 0.64 | 1.00 | 1.63 |
| 2.50 | 1 (Std.) | 1.000 | 7/8-14 | 3/4-16 | 1.13 | 1.499 | 0.88 | 0.63 | 0.03 | 0.94 | 2.38 | 0.36 | 0.25 | 0.52 | 0.75 | 1.38 |
| | 2 | 1.750 | 1 1/2-12 | 1 1/4-12 | 2.00 | 2.374 | 1.50 | 0.63 | 0.03 | 1.69 | 3.47 | 0.60 | 0.50 | 0.53 | 1.25 | 1.88 |
| | 3 | 1.375 | 1 1/4-12 | 1-14 | 1.63 | 1.999 | 1.13 | 0.63 | 0.19 | 1.31 | 2.87 | 0.36 | 0.38 | 0.64 | 1.00 | 1.63 |
| 3.25 | 1 (Std.) | 1.375 | 1 1/4-12 | 1-14 | 1.63 | 1.999 | 1.13 | 0.75 | 0.19 | 1.31 | 2.87 | 0.36 | 0.25 | 0.64 | 0.88 | 1.63 |
| | 2 | 2.000 | 1 3/4-12 | 1 1/2-12 | 2.25 | 2.624 | 1.69 | 0.75 | 0.13 | 1.94 | 3.72 | 0.60 | 0.38 | 0.53 | 1.25 | 2.00 |
| | 3 | 1.750 | 1 1/2-12 | 1 1/4-12 | 2.00 | 2.374 | 1.50 | 0.75 | 0.03 | 1.69 | 3.47 | 0.60 | 0.38 | 0.53 | 1.13 | 1.88 |
| 4.00 | 1 (Std.) | 1.750 | 1 1/2-12 | 1 1/4-12 | 2.00 | 2.374 | 1.50 | 0.88 | 0.03 | 1.69 | 3.47 | 0.60 | 0.25 | 0.53 | 1.00 | 1.88 |
| | 2 | 2.500 | 2 1/4-12 | 1 7/8-12 | 3.00 | 3.124 | 2.06 | 0.88 | 0.25 | 2.38 | 4.25 | 0.60 | 0.38 | 0.65 | 1.38 | 2.25 |
| | 3 | 2.000 | 1 3/4-12 | 1 1/2-12 | 2.25 | 2.624 | 1.69 | 0.88 | 0.13 | 1.94 | 3.72 | 0.60 | 0.25 | 0.53 | 1.13 | 2.00 |
| 5.00 | 1 (Std.) | 2.000 | 1 3/4-12 | 1 1/2-12 | 2.25 | 2.624 | 1.69 | 0.88 | 0.13 | 1.94 | 3.72 | 0.60 | 0.25 | 0.53 | 1.13 | 2.00 |
| | 2 | 3.500 | 3 1/4-12 | 2 1/2-12 | 3.50 | 4.249 | 3.00 | 0.88 | - | 3.38 | 5.76 | 0.91 | 0.38 | 0.34 | 1.38 | 2.25 |
| | 3 | 2.500 | 2 1/4-12 | 1 7/8-12 | 3.00 | 3.124 | 2.06 | 0.88 | 0.25 | 2.38 | 4.25 | 0.60 | 0.38 | 0.65 | 1.38 | 2.25 |
| | 4 | 3.000 | 2 3/4-12 | 2 1/4-12 | 3.50 | 3.749 | 2.63 | 0.88 | - | 2.88 | 5.26 | 0.85 | 0.38 | 0.41 | 1.38 | 2.25 |
| 6.00 | 1 (Std.) | 2.500 | 2 1/4-12 | 1 7/8-12 | 3.00 | 3.124 | 2.06 | 1.00 | 0.25 | 2.38 | 4.25 | 0.60 | 0.25 | 0.65 | 1.25 | 2.25 |
| | 2 | 4.000 | 3 3/4-12 | 3-12 | 4.00 | 4.749 | 3.38 | 1.00 | - | 3.88 | 6.31 | 0.91 | 0.25 | 0.34 | 1.25 | 2.25 |
| | 3 | 3.000 | 2 3/4-12 | 2 1/4-12 | 3.50 | 3.749 | 2.63 | 1.00 | - | 2.88 | 5.26 | 0.85 | 0.25 | 0.41 | 1.25 | 2.25 |
| | 4 | 3.500 | 3 1/4-12 | 2 1/2-12 | 3.50 | 4.249 | 3.00 | 1.00 | - | 3.38 | 5.76 | 0.91 | 0.25 | 0.34 | 1.25 | 2.25 |

**"Special" Thread Style 3**
Special thread, extension, rod eye, blank, etc., are also available.

To order, specify "Style 3" and give desired dimensions for KK, A, W or WF. If otherwise special, furnish dimensioned sketch.

**Tie Rod Retained Gland**

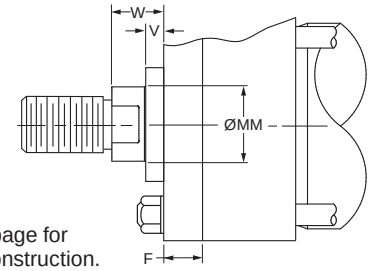


See Gland Retention page for styles that have this construction.

View Table of Contents

## Rod End Dimensions – circular bolt-on retainer construction

**Thread Style 9[2]**
**(NFPA Style SF) Small Female**

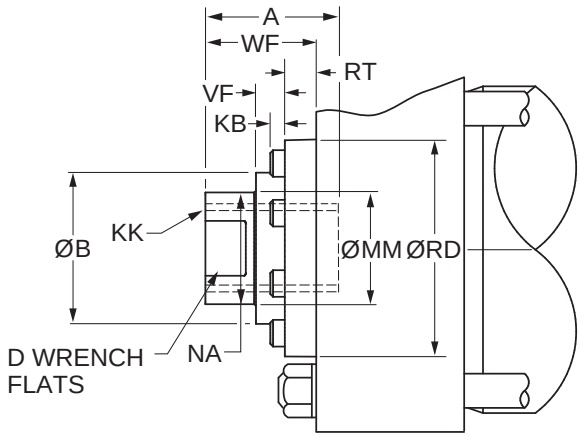


**Style 55[1]**
**Flanged Rod End**

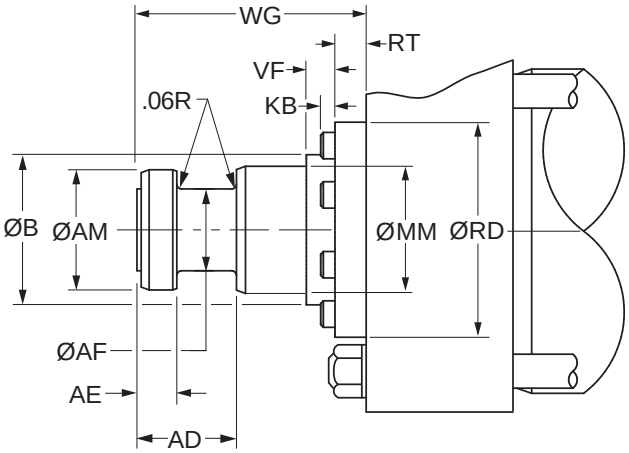


See Gland Retention page to determine which bore, rod and mounting style combinations have circular bolt-on retainers and which have tie rod retained glands.

## Rod End Dimensions

| Bore Ø | Rod No. | MM Rod Ø | Thread Style 9 KK | A | AD | AE +.001 -.001 | AF Ø | AM Ø | B Ø +.000 -.002 | D | KB | NA | RD | RT | VF | WF | WG |
|---|---|---|---|---|---|---|---|---|---|---|---|---|---|---|---|---|---|
| 1.50 | 1 (Std.) | 0.625 | 7/16-20 | 0.75 | 0.63 | 0.249 | 0.38 | 0.57 | 1.124 | 0.50 | 0.03 | 0.56 | 1.94 | 0.36 | 0.27 | 1.00 | 1.75 |
| | 2 | 1.000 | 3/4-16 | 1.13 | 0.94 | 0.374 | 0.69 | 0.95 | 1.499 | 0.88 | 0.03 | 0.94 | 2.38 | 0.36 | 0.52 | 1.38 | 2.38 |
| 2.00 | 1 (Std.) | 1.000 | 3/4-16 | 1.13 | 0.94 | 0.374 | 0.69 | 0.95 | 1.499 | 0.88 | 0.03 | 0.94 | 2.38 | 0.36 | 0.52 | 1.38 | 2.38 |
| | 2 | 1.375 | 1-14 | 1.63 | 1.06 | 0.374 | 0.88 | 1.32 | 1.999 | 1.13 | 0.19 | 1.31 | 2.87 | 0.36 | 0.64 | 1.63 | 2.75 |
| 2.50 | 1 (Std.) | 1.000 | 3/4-16 | 1.13 | 0.94 | 0.374 | 0.69 | 0.95 | 1.499 | 0.88 | 0.03 | 0.94 | 2.38 | 0.36 | 0.52 | 1.38 | 2.38 |
| | 2 | 1.750 | 1 1/4-12 | 2.00 | 1.31 | 0.499 | 1.13 | 1.70 | 2.374 | 1.50 | 0.03 | 1.69 | 3.47 | 0.60 | 0.53 | 1.88 | 3.13 |
| | 3 | 1.375 | 1-14 | 1.63 | 1.06 | 0.374 | 0.88 | 1.32 | 1.999 | 1.13 | 0.19 | 1.31 | 2.87 | 0.36 | 0.64 | 1.63 | 2.75 |
| 3.25 | 1 (Std.) | 1.375 | 1-14 | 1.63 | 1.06 | 0.374 | 0.88 | 1.32 | 1.999 | 1.13 | 0.19 | 1.31 | 2.87 | 0.36 | 0.64 | 1.63 | 2.75 |
| | 2 | 2.000 | 1 1/2-12 | 2.25 | 1.69 | 0.624 | 1.38 | 1.95 | 2.624 | 1.69 | 0.13 | 1.94 | 3.72 | 0.60 | 0.53 | 2.00 | 3.75 |
| | 3 | 1.750 | 1 1/4-12 | 2.00 | 1.31 | 0.499 | 1.13 | 1.70 | 2.374 | 1.50 | 0.03 | 1.69 | 3.47 | 0.60 | 0.53 | 1.88 | 3.13 |
| 4.00 | 1 (Std.) | 1.750 | 1 1/4-12 | 2.00 | 1.31 | 0.499 | 1.13 | 1.70 | 2.374 | 1.50 | 0.03 | 1.69 | 3.47 | 0.60 | 0.53 | 1.88 | 3.13 |
| | 2 | 2.500 | 1 7/8-12 | 3.00 | 1.94 | 0.749 | 1.75 | 2.45 | 3.124 | 2.06 | 0.25 | 2.38 | 4.25 | 0.60 | 0.65 | 2.25 | 4.50 |
| | 3 | 2.000 | 1 1/2-12 | 2.25 | 1.69 | 0.624 | 1.38 | 1.95 | 2.624 | 1.69 | 0.13 | 1.94 | 3.72 | 0.60 | 0.53 | 2.00 | 3.75 |
| 5.00 | 1 (Std.) | 2.000 | 1 1/2-12 | 2.25 | 1.69 | 0.624 | 1.38 | 1.95 | 2.624 | 1.69 | 0.13 | 1.94 | 3.72 | 0.60 | 0.53 | 2.00 | 3.75 |
| | 2 | 3.500 | 2 1/2-12 | 3.50 | 2.69 | 0.999 | 2.50 | 3.45 | 4.249 | 3.00 | - | 3.38 | 5.76 | 0.91 | 0.34 | 2.25 | 5.63 |
| | 3 | 2.500 | 1 7/8-12 | 3.00 | 1.94 | 0.749 | 1.75 | 2.45 | 3.124 | 2.06 | 0.25 | 2.38 | 4.25 | 0.60 | 0.65 | 2.25 | 4.50 |
| | 4 | 3.000 | 2 1/4-12 | 3.50 | 2.44 | 0.874 | 2.25 | 2.95 | 3.749 | 2.63 | - | 2.88 | 5.26 | 0.85 | 0.41 | 2.25 | 4.88 |
| 6.00 | 1 (Std.) | 2.500 | 1 7/8-12 | 3.00 | 1.94 | 0.749 | 1.75 | 2.45 | 3.124 | 2.06 | 0.25 | 2.38 | 4.25 | 0.60 | 0.65 | 2.25 | 4.50 |
| | 2 | 4.000 | 3-12 | 4.00 | 2.69 | 0.999 | 3.00 | 3.95 | 4.749 | 3.38 | - | 3.88 | 6.31 | 0.91 | 0.34 | 2.25 | 5.75 |
| | 3 | 3.000 | 2 1/4-12 | 3.50 | 2.44 | 0.874 | 2.25 | 2.95 | 3.749 | 2.63 | - | 2.88 | 5.26 | 0.85 | 0.41 | 2.25 | 4.88 |
| | 4 | 3.500 | 2 1/2-12 | 3.50 | 2.69 | 0.999 | 2.50 | 3.45 | 4.249 | 3.00 | - | 3.38 | 5.76 | 0.91 | 0.34 | 2.25 | 5.63 |

### "Special" Thread Style 3

Special thread, extension, rod eye, blank, etc., are also available.

To order, specify "Style 3" and give desired dimensions for KK, A, W or WF. If otherwise special, furnish dimensioned sketch.

[1] For special WG dimension, specify "Style 3" and give desired dimension for WG. For other changes, place "S" in the model code, and describe rod end with dimensioned sketch.

[2] Style 9 stroke restrictions may apply. See Style 9 Minimum Stroke Table on How to Order page for details.

### Tie Rod Retained Gland

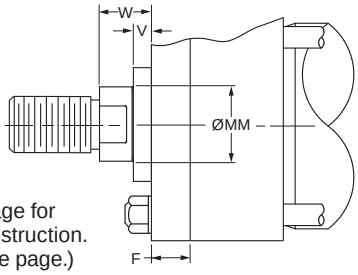


See Gland Retention page for styles that have this construction. (Dimensions on opposite page.)

View Table of Contents



## Tie Rods Extended Both Ends Mounting

Style TD
(NFPA Style MX1)

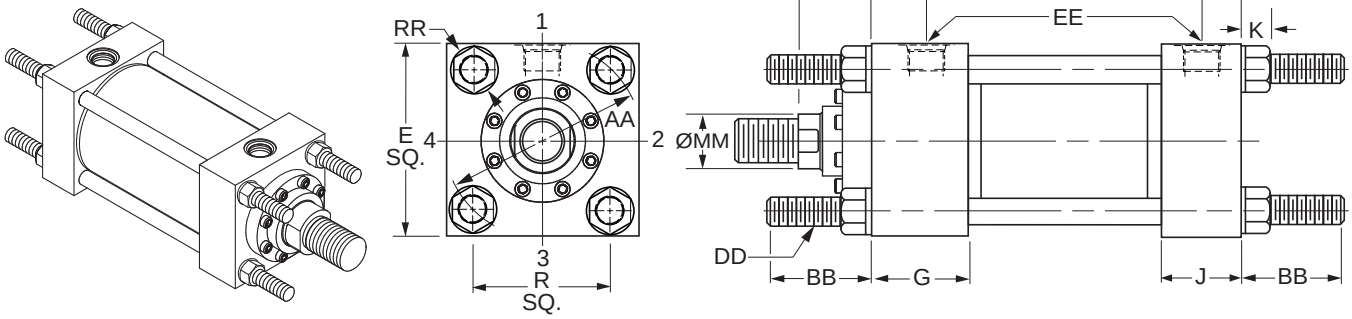


### Style TD – Dimensional and Mounting Data

| Bore Ø | Rod No. | MM Rod Ø | AA | BB | DD | E | EE | | G | J | K Max. | R | RR | WF | Y | Add Stroke | | |
|---|---|---|---|---|---|---|---|---|---|---|---|---|---|---|---|---|---|---|
| | | | | | | | NPTF[1] | SAE[2] | | | | | | | | LG | P | ZJ |
| 1.50 | 1 (std.) | 0.625 | 2.31 | 1.38 | 3/8-24 | 2.50 | 1/2 | 10 | 1.75 | 1.50 | 0.42 | 1.63 | 0.68 | 1.00 | 2.00 | 4.63 | 2.88 | 5.63 |
| | 2 | 1.000 | 2.31 | 1.38 | 3/8-24 | 2.50 | 1/2 | 10 | 1.75 | 1.50 | 0.42 | 1.63 | 0.68 | 1.38 | 2.38 | 4.63 | 2.88 | 6.00 |
| 2.00 | 1 (std.) | 1.000 | 2.90 | 1.81 | 1/2-20 | 3.00 | 1/2 | 10 | 1.75 | 1.50 | 0.57 | 2.05 | 0.90 | 1.38 | 2.38 | 4.63 | 2.88 | 6.00 |
| | 2 | 1.375 | 2.90 | 1.81 | 1/2-20 | 3.00 | 1/2 | 10 | 1.75 | 1.50 | 0.57 | 2.05 | 0.90 | 1.63 | 2.63 | 4.63 | 2.88 | 6.25 |
| 2.50 | 1 (std.) | 1.000 | 3.61 | 1.81 | 1/2-20 | 3.50 | 1/2 | 10 | 1.75 | 1.50 | 0.57 | 2.55 | 0.90 | 1.38 | 2.38 | 4.75 | 3.00 | 6.13 |
| | 2 | 1.750 | 3.61 | 1.81 | 1/2-20 | 3.50 | 1/2 | 10 | 1.75 | 1.50 | 0.57 | 2.55 | 0.90 | 1.88 | 2.88 | 4.75 | 3.00 | 6.63 |
| | 3 | 1.375 | 3.61 | 1.81 | 1/2-20 | 3.50 | 1/2 | 10 | 1.75 | 1.50 | 0.57 | 2.55 | 0.90 | 1.63 | 2.63 | 4.75 | 3.00 | 6.38 |
| 3.25 | 1 (std.) | 1.375 | 4.60 | 2.31 | 5/8-18 | 4.50 | 3/4 | 12 | 2.00 | 1.75 | 0.68 | 3.25 | 1.11 | 1.63 | 2.75 | 5.50 | 3.50 | 7.13 |
| | 2 | 2.000 | 4.60 | 2.31 | 5/8-18 | 4.50 | 3/4 | 12 | 2.00 | 1.75 | 0.68 | 3.25 | 1.11 | 2.00 | 3.13 | 5.50 | 3.50 | 7.50 |
| | 3 | 1.750 | 4.60 | 2.31 | 5/8-18 | 4.50 | 3/4 | 12 | 2.00 | 1.75 | 0.68 | 3.25 | 1.11 | 1.88 | 3.00 | 5.50 | 3.50 | 7.38 |
| 4.00 | 1 (std.) | 1.750 | 5.40 | 2.31 | 5/8-18 | 5.00 | 3/4 | 12 | 2.00 | 1.75 | 0.68 | 3.82 | 1.11 | 1.88 | 3.00 | 5.75 | 3.75 | 7.63 |
| | 2 | 2.500 | 5.40 | 2.31 | 5/8-18 | 5.00 | 3/4 | 12 | 2.00 | 1.75 | 0.68 | 3.82 | 1.11 | 2.25 | 3.38 | 5.75 | 3.75 | 8.00 |
| | 3 | 2.000 | 5.40 | 2.31 | 5/8-18 | 5.00 | 3/4 | 12 | 2.00 | 1.75 | 0.68 | 3.82 | 1.11 | 2.00 | 3.13 | 5.75 | 3.75 | 7.75 |
| 5.00 | 1 (std.) | 2.000 | 7.00 | 3.19 | 7/8-14 | 6.50 | 3/4 | 12 | 2.00 | 1.75 | 0.94 | 4.95 | 1.55 | 2.00 | 3.13 | 6.25 | 4.25 | 8.25 |
| | 2 | 3.500 | 7.00 | 3.19 | 7/8-14 | 6.50 | 3/4 | 12 | 2.00 | 1.75 | 0.94 | 4.95 | 1.55 | 2.25 | 3.38 | 6.25 | 4.25 | 8.50 |
| | 3 | 2.500 | 7.00 | 3.19 | 7/8-14 | 6.50 | 3/4 | 12 | 2.00 | 1.75 | 0.94 | 4.95 | 1.55 | 2.25 | 3.38 | 6.25 | 4.25 | 8.50 |
| | 4 | 3.000 | 7.00 | 3.19 | 7/8-14 | 6.50 | 3/4 | 12 | 2.00 | 1.75 | 0.94 | 4.95 | 1.55 | 2.25 | 3.38 | 6.25 | 4.25 | 8.50 |
| 6.00 | 1 (std.) | 2.500 | 8.10 | 3.63 | 1-14 | 7.50 | 1 | 16 | 2.25 | 2.25 | 1.05 | 5.73 | 1.77 | 2.25 | 3.50 | 7.38 | 4.88 | 9.63 |
| | 2 | 4.000 | 8.10 | 3.63 | 1-14 | 7.50 | 1 | 16 | 2.25 | 2.25 | 1.05 | 5.73 | 1.77 | 2.25 | 3.50 | 7.38 | 4.88 | 9.63 |
| | 3 | 3.000 | 8.10 | 3.63 | 1-14 | 7.50 | 1 | 16 | 2.25 | 2.25 | 1.05 | 5.73 | 1.77 | 2.25 | 3.50 | 7.38 | 4.88 | 9.63 |
| | 4 | 3.500 | 8.10 | 3.63 | 1-14 | 7.50 | 1 | 16 | 2.25 | 2.25 | 1.05 | 5.73 | 1.77 | 2.25 | 3.50 | 7.38 | 4.88 | 9.63 |

[1]NPTF ports are available at no extra charge.
[2]SAE straight thread ports are standard and are indicated by port number.

### Style T

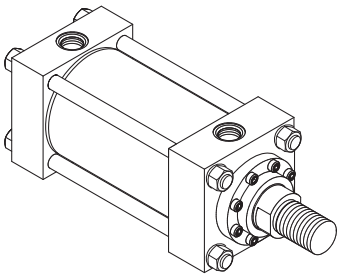

### Style TB

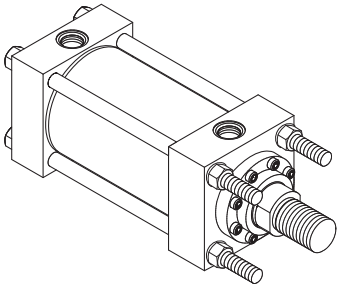

### Style TC

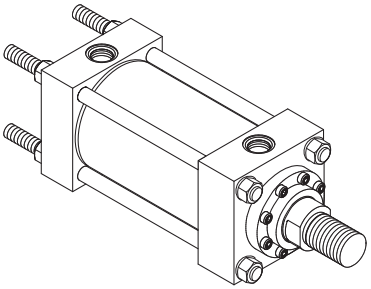

Dimensions for T, TB and TC Mount may be obtained from the above dimensional table.

View Table of Contents

## Head Rectangular Flange Mounting

Style J
(NFPA Style MF1)

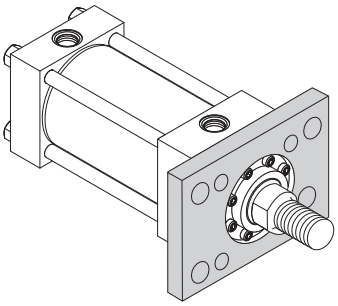

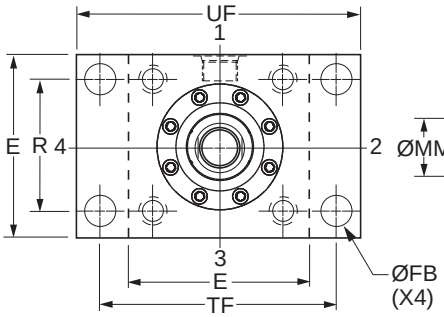


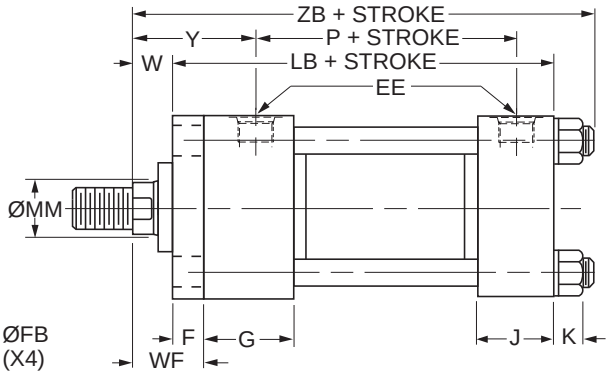


### Style J – Dimensional and Mounting Data

| Bore Ø | E | EE | | F | FB Ø | G | J | K Max. | R | TF | UF | Add Stroke | |
|---|---|---|---|---|---|---|---|---|---|---|---|---|---|
| | | NPTF[1] | SAE[2] | | | | | | | | | LB | P |
| 1.50 | 2.50 | 1/2 | 10 | 0.38 | 0.44 | 1.75 | 1.50 | 0.42 | 1.63 | 3.44 | 4.25 | 5.00 | 2.88 |
| 2.00 | 3.00 | 1/2 | 10 | 0.63 | 0.56 | 1.75 | 1.50 | 0.57 | 2.05 | 4.13 | 5.13 | 5.25 | 2.88 |
| 2.50 | 3.50 | 1/2 | 10 | 0.63 | 0.56 | 1.75 | 1.50 | 0.57 | 2.55 | 4.63 | 5.63 | 5.38 | 3.00 |
| 3.25 | 4.50 | 3/4 | 12 | 0.75 | 0.69 | 2.00 | 1.75 | 0.68 | 3.25 | 5.88 | 7.13 | 6.25 | 3.50 |
| 4.00 | 5.00 | 3/4 | 12 | 0.88 | 0.69 | 2.00 | 1.75 | 0.68 | 3.82 | 6.38 | 7.63 | 6.63 | 3.75 |
| 5.00 | 6.50 | 3/4 | 12 | 0.88 | 0.94 | 2.00 | 1.75 | 0.94 | 4.95 | 8.19 | 9.75 | 7.13 | 4.25 |
| 6.00 | 7.50 | 1 | 16 | 1.00 | 1.06 | 2.25 | 2.25 | 1.05 | 5.73 | 9.44 | 11.25 | 8.38 | 4.88 |

[1]NPTF ports are available at no extra charge.
[2]SAE straight thread ports are standard and are indicated by port number.

### Style J – Dimensional and Mounting Data

| Bore Ø | Rod No. | MM Rod Ø | W | WF | Y | Add Stroke ZB Max. |
|---|---|---|---|---|---|---|
| 1.50 | 1 (std.) | 0.625 | 0.63 | 1.00 | 2.00 | 6.29 |
| | 2 | 1.000 | 1.00 | 1.38 | 2.38 | 6.67 |
| 2.00 | 1 (std.) | 1.000 | 0.75 | 1.38 | 2.38 | 6.81 |
| | 2 | 1.375 | 1.00 | 1.63 | 2.63 | 7.06 |
| 2.50 | 1 (std.) | 1.000 | 0.75 | 1.38 | 2.38 | 6.93 |
| | 2 | 1.750 | 1.25 | 1.88 | 2.88 | 7.43 |
| | 3 | 1.375 | 1.00 | 1.63 | 2.63 | 7.18 |
| 3.25 | 1 (std.) | 1.375 | 0.88 | 1.63 | 2.75 | 8.06 |
| | 2 | 2.000 | 1.25 | 2.00 | 3.13 | 8.43 |
| | 3 | 1.750 | 1.13 | 1.88 | 3.00 | 8.31 |
| 4.00 | 1 (std.) | 1.750 | 1.00 | 1.88 | 3.00 | 8.56 |
| | 2 | 2.500 | 1.38 | 2.25 | 3.38 | 8.94 |
| | 3 | 2.000 | 1.13 | 2.00 | 3.13 | 8.68 |
| 5.00 | 1 (std.) | 2.000 | 1.13 | 2.00 | 3.13 | 9.44 |
| | 2 | 3.500 | 1.38 | 2.25 | 3.38 | 9.69 |
| | 3 | 2.500 | 1.38 | 2.25 | 3.38 | 9.69 |
| | 4 | 3.000 | 1.38 | 2.25 | 3.38 | 9.69 |
| 6.00 | 1 (std.) | 2.500 | 1.25 | 2.25 | 3.50 | 10.93 |
| | 2 | 4.000 | 1.25 | 2.25 | 3.50 | 10.93 |
| | 3 | 3.000 | 1.25 | 2.25 | 3.50 | 10.93 |
| | 4 | 3.500 | 1.25 | 2.25 | 3.50 | 10.93 |

### Style J – Maximum Operating Pressure / 2HD

| Bore Ø | Maximum psi Push[3] Rod Code | | | |
|---|---|---|---|---|
| | 1 | 2 | 3 | 4 |
| 1.50 | 1400 | 1000 | - | - |
| 2.00 | 2000 | 1200 | - | - |
| 2.50 | 700 | 1000 | 700 | - |
| 3.25 | 800 | 600 | 800 | - |
| 4.00 | 1000 | 700 | 1000 | - |
| 5.00 | 850 | 800 | 850 | 450 |
| 6.00 | 650 | 400 | 650 | 400 |

[3]Maximum Pressure Rating – Push Application.

View Table of Contents

## Head Square Flange Mounting
Style JB
(NFPA Style MF5)

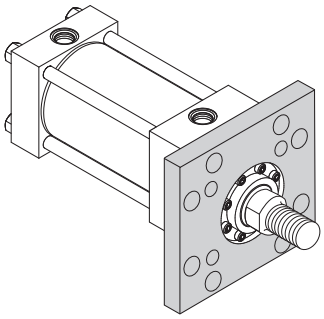

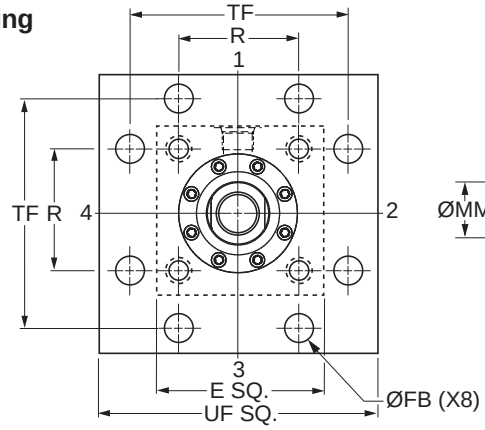


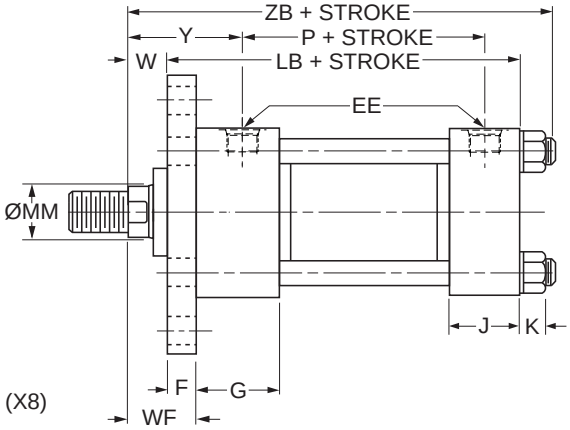


### Style JB – Dimensional and Mounting Data

| Bore Ø | E | EE | | F | FB Ø | G | J | K Max. | R | TF | UF | Add Stroke | |
|---|---|---|---|---|---|---|---|---|---|---|---|---|---|
| | | NPTF[1] | SAE[2] | | | | | | | | | LB | P |
| 1.50 | 2.50 | 1/2 | 10 | 0.38 | 0.44 | 1.75 | 1.50 | 0.42 | 1.63 | 3.44 | 4.25 | 5.00 | 2.88 |
| 2.00 | 3.00 | 1/2 | 10 | 0.63 | 0.56 | 1.75 | 1.50 | 0.57 | 2.05 | 4.13 | 5.13 | 5.25 | 2.88 |
| 2.50 | 3.50 | 1/2 | 10 | 0.63 | 0.56 | 1.75 | 1.50 | 0.57 | 2.55 | 4.63 | 5.63 | 5.38 | 3.00 |
| 3.25 | 4.50 | 3/4 | 12 | 0.75 | 0.69 | 2.00 | 1.75 | 0.68 | 3.25 | 5.88 | 7.13 | 6.25 | 3.50 |
| 4.00 | 5.00 | 3/4 | 12 | 0.88 | 0.69 | 2.00 | 1.75 | 0.68 | 3.82 | 6.38 | 7.63 | 6.63 | 3.75 |
| 5.00 | 6.50 | 3/4 | 12 | 0.88 | 0.94 | 2.00 | 1.75 | 0.94 | 4.95 | 8.19 | 9.75 | 7.13 | 4.25 |
| 6.00 | 7.50 | 1 | 16 | 1.00 | 1.06 | 2.25 | 2.25 | 1.05 | 5.73 | 9.44 | 11.25 | 8.38 | 4.88 |

[1]NPTF ports are available at no extra charge.
[2]SAE straight thread ports are standard and are indicated by port number.

### Style JB – Dimensional and Mounting Data

| Bore Ø | Rod No. | MM Rod Ø | W | WF | Y | Add Stroke ZB Max. |
|---|---|---|---|---|---|---|
| 1.50 | 1 (std.) | 0.625 | 0.63 | 1.00 | 2.00 | 6.29 |
| | 2 | 1.000 | 1.00 | 1.38 | 2.38 | 6.67 |
| 2.00 | 1 (std.) | 1.000 | 0.75 | 1.38 | 2.38 | 6.81 |
| | 2 | 1.375 | 1.00 | 1.63 | 2.63 | 7.06 |
| 2.50 | 1 (std.) | 1.000 | 0.75 | 1.38 | 2.38 | 6.93 |
| | 2 | 1.750 | 1.25 | 1.88 | 2.88 | 7.43 |
| | 3 | 1.375 | 1.00 | 1.63 | 2.63 | 7.18 |
| 3.25 | 1 (std.) | 1.375 | 0.88 | 1.63 | 2.75 | 8.06 |
| | 2 | 2.000 | 1.25 | 2.00 | 3.13 | 8.43 |
| | 3 | 1.750 | 1.13 | 1.88 | 3.00 | 8.31 |
| 4.00 | 1 (std.) | 1.750 | 1.00 | 1.88 | 3.00 | 8.56 |
| | 2 | 2.500 | 1.38 | 2.25 | 3.38 | 8.94 |
| | 3 | 2.000 | 1.13 | 2.00 | 3.13 | 8.68 |
| 5.00 | 1 (std.) | 2.000 | 1.13 | 2.00 | 3.13 | 9.44 |
| | 2 | 3.500 | 1.38 | 2.25 | 3.38 | 9.69 |
| | 3 | 2.500 | 1.38 | 2.25 | 3.38 | 9.69 |
| | 4 | 3.000 | 1.38 | 2.25 | 3.38 | 9.69 |
| 6.00 | 1 (std.) | 2.500 | 1.25 | 2.25 | 3.50 | 10.93 |
| | 2 | 4.000 | 1.25 | 2.25 | 3.50 | 10.93 |
| | 3 | 3.000 | 1.25 | 2.25 | 3.50 | 10.93 |
| | 4 | 3.500 | 1.25 | 2.25 | 3.50 | 10.93 |

### Style JB – Maximum Operating Pressure / 2HD

| Bore Ø | Maximum psi Push[3] Rod Code | | | |
|---|---|---|---|---|
| | 1 | 2 | 3 | 4 |
| 1.50 | 3000 | 3000 | - | - |
| 2.00 | 3000 | 3000 | - | - |
| 2.50 | 3000 | 3000 | 3000 | - |
| 3.25 | 3000 | 3000 | 3000 | - |
| 4.00 | 3000 | 3000 | 3000 | - |
| 5.00 | 2500 | 2300 | 2500 | 1800 |
| 6.00 | 2000 | 1600 | 2000 | 1600 |

[3]Maximum Pressure Rating – Push Application.

View Table of Contents

## Head Rectangular Mounting
Style JJ
(NFPA Style ME5)

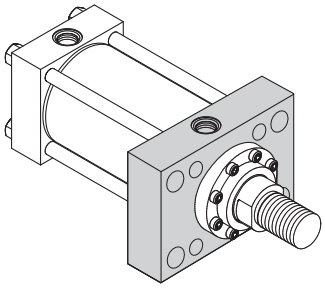

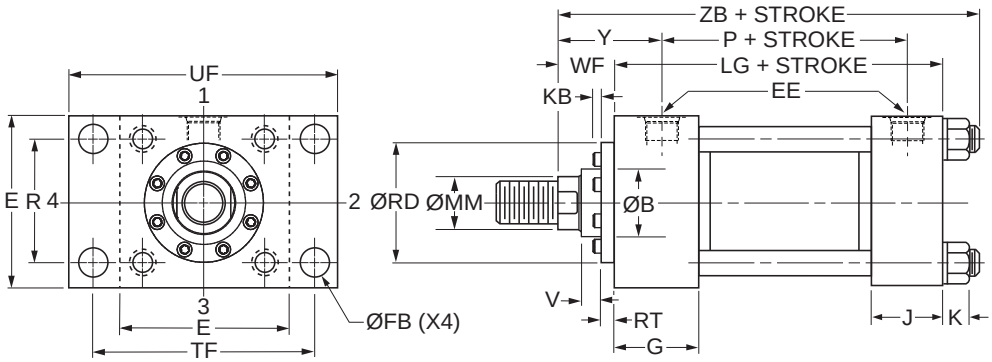


### Style JJ – Dimensional and Mounting Data

| Bore Ø | E | EE | | FB Ø | G | J | K Max. | R | TF | UF | Add Stroke | |
|---|---|---|---|---|---|---|---|---|---|---|---|---|
| | | NPTF[1] | SAE[2] | | | | | | | | LG | P |
| 1.50 | 2.50 | 1/2 | 10 | 0.44 | 1.75 | 1.50 | 0.42 | 1.63 | 3.44 | 4.25 | 4.63 | 2.88 |
| 2.00 | 3.00 | 1/2 | 10 | 0.56 | 1.75 | 1.50 | 0.57 | 2.05 | 4.13 | 5.13 | 4.63 | 2.88 |
| 2.50 | 3.50 | 1/2 | 10 | 0.56 | 1.75 | 1.50 | 0.57 | 2.55 | 4.63 | 5.63 | 4.75 | 3.00 |
| 3.25 | 4.50 | 3/4 | 12 | 0.69 | 2.00 | 1.75 | 0.68 | 3.25 | 5.88 | 7.13 | 5.50 | 3.50 |
| 4.00 | 5.00 | 3/4 | 12 | 0.69 | 2.00 | 1.75 | 0.68 | 3.82 | 6.38 | 7.63 | 5.75 | 3.75 |
| 5.00 | 6.50 | 3/4 | 12 | 0.94 | 2.00 | 1.75 | 0.94 | 4.95 | 8.19 | 9.75 | 6.25 | 4.25 |
| 6.00 | 7.50 | 1 | 16 | 1.06 | 2.25 | 2.25 | 1.05 | 5.73 | 9.44 | 11.25 | 7.38 | 4.88 |

[1]NPTF ports are available at no extra charge.
[2]SAE straight thread ports are standard and are indicated by port number.

### Style JJ – Dimensional and Mounting Data

| Bore Ø | Rod No. | MM Rod Ø | B Ø +.000 -.002 | KB | RD Ø | RT | V | WF | Y | Add Stroke |
|---|---|---|---|---|---|---|---|---|---|---|
| | | | | | | | | | | ZB Max |
| 1.50 | 1 (std.) | 0.625 | 1.124 | 0.03 | 1.94 | 0.36 | 0.27 | 1.00 | 2.00 | 6.29 |
| | 2 | 1.000 | 1.499 | 0.03 | 2.38 | 0.36 | 0.52 | 1.38 | 2.38 | 6.67 |
| 2.00 | 1 (std.) | 1.000 | 1.499 | 0.03 | 2.38 | 0.36 | 0.52 | 1.38 | 2.38 | 6.81 |
| | 2 | 1.375 | 1.999 | 0.19 | 2.87 | 0.36 | 0.64 | 1.63 | 2.63 | 7.06 |
| 2.50 | 1 (std.) | 1.000 | 1.499 | 0.03 | 2.38 | 0.36 | 0.52 | 1.38 | 2.38 | 6.93 |
| | 2 | 1.750 | 2.374 | 0.03 | 3.47 | 0.60 | 0.53 | 1.88 | 2.88 | 7.43 |
| | 3 | 1.375 | 1.999 | 0.19 | 2.87 | 0.36 | 0.64 | 1.63 | 2.63 | 7.18 |
| 3.25 | 1 (std.) | 1.375 | 1.999 | 0.19 | 2.87 | 0.36 | 0.64 | 1.63 | 2.75 | 8.06 |
| | 2 | 2.000 | 2.624 | 0.13 | 3.72 | 0.60 | 0.53 | 2.00 | 3.13 | 8.43 |
| | 3 | 1.750 | 2.374 | 0.03 | 3.47 | 0.60 | 0.53 | 1.88 | 3.00 | 8.31 |
| 4.00 | 1 (std.) | 1.750 | 2.374 | 0.03 | 3.47 | 0.60 | 0.53 | 1.88 | 3.00 | 8.56 |
| | 2 | 2.500 | 3.124 | 0.25 | 4.25 | 0.60 | 0.65 | 2.25 | 3.38 | 8.94 |
| | 3 | 2.000 | 2.624 | 0.13 | 3.72 | 0.60 | 0.53 | 2.00 | 3.13 | 8.68 |
| 5.00 | 1 (std.) | 2.000 | 2.624 | 0.13 | 3.72 | 0.60 | 0.53 | 2.00 | 3.13 | 9.44 |
| | 2 | 3.500 | 4.249 | - | 5.76 | 0.91 | 0.34 | 2.25 | 3.38 | 9.69 |
| | 3 | 2.500 | 3.124 | 0.25 | 4.25 | 0.60 | 0.65 | 2.25 | 3.38 | 9.69 |
| | 4 | 3.000 | 3.749 | - | 5.26 | 0.85 | 0.41 | 2.25 | 3.38 | 9.69 |
| 6.00 | 1 (std.) | 2.500 | 3.124 | 0.25 | 4.25 | 0.60 | 0.65 | 2.25 | 3.50 | 10.93 |
| | 2 | 4.000 | 4.749 | - | 6.31 | 0.91 | 0.34 | 2.25 | 3.50 | 10.93 |
| | 3 | 3.000 | 3.749 | - | 5.26 | 0.85 | 0.41 | 2.25 | 3.50 | 10.93 |
| | 4 | 3.500 | 4.249 | - | 5.76 | 0.91 | 0.34 | 2.25 | 3.50 | 10.93 |

View Table of Contents

## Cap Rectangular Flange Mounting
Style H
(NFPA Style MF2)

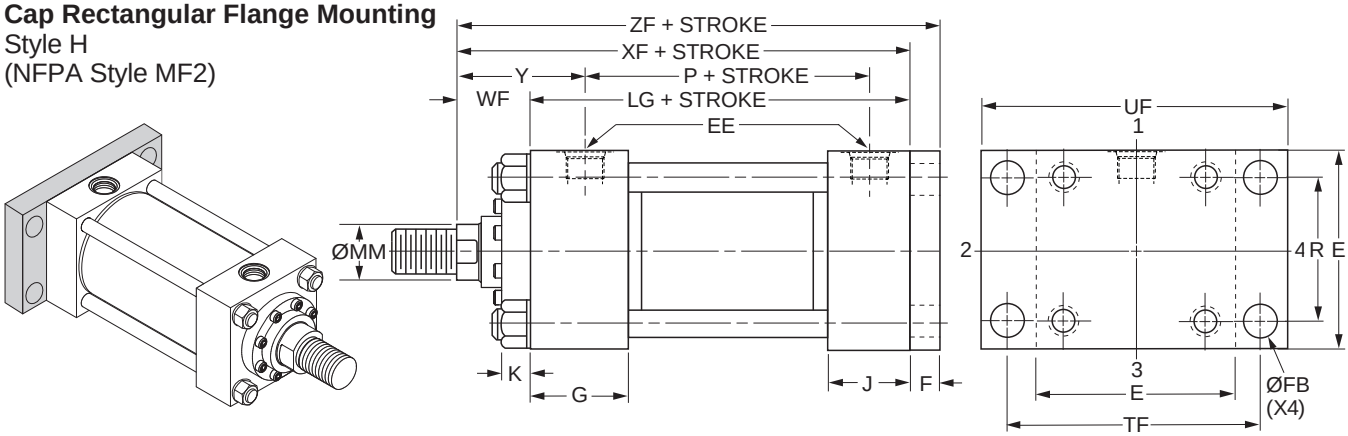


### Style H – Dimensional and Mounting Data

| Bore Ø | E | EE | | F | FB Ø | G | J | K Max. | R | TF | UF | Add Stroke | |
|---|---|---|---|---|---|---|---|---|---|---|---|---|---|
| | | NPTF[1] | SAE[2] | | | | | | | | | LG | P |
| 1.50 | 2.50 | 1/2 | 10 | 0.38 | 0.44 | 1.75 | 1.50 | 0.42 | 1.63 | 3.44 | 4.25 | 4.63 | 2.88 |
| 2.00 | 3.00 | 1/2 | 10 | 0.63 | 0.56 | 1.75 | 1.50 | 0.57 | 2.05 | 4.13 | 5.13 | 4.63 | 2.88 |
| 2.50 | 3.50 | 1/2 | 10 | 0.63 | 0.56 | 1.75 | 1.50 | 0.57 | 2.55 | 4.63 | 5.63 | 4.75 | 3.00 |
| 3.25 | 4.50 | 3/4 | 12 | 0.75 | 0.69 | 2.00 | 1.75 | 0.68 | 3.25 | 5.88 | 7.13 | 5.50 | 3.50 |
| 4.00 | 5.00 | 3/4 | 12 | 0.88 | 0.69 | 2.00 | 1.75 | 0.68 | 3.82 | 6.38 | 7.63 | 5.75 | 3.75 |
| 5.00 | 6.50 | 3/4 | 12 | 0.88 | 0.94 | 2.00 | 1.75 | 0.94 | 4.95 | 8.19 | 9.75 | 6.25 | 4.25 |
| 6.00 | 7.50 | 1 | 16 | 1.00 | 1.06 | 2.25 | 2.25 | 1.05 | 5.73 | 9.44 | 11.25 | 7.38 | 4.88 |

[1]NPTF ports are available at no extra charge.
[2]SAE straight thread ports are standard and are indicated by port number.

### Style H – Dimensional and Mounting Data

| Bore Ø | Rod No. | MM Rod Ø | WF | Y | Add Stroke | |
|---|---|---|---|---|---|---|
| | | | | | XF | ZF |
| 1.50 | 1 (std.) | 0.625 | 1.00 | 2.00 | 5.63 | 6.00 |
| | 2 | 1.000 | 1.38 | 2.38 | 6.00 | 6.38 |
| 2.00 | 1 (std.) | 1.000 | 1.38 | 2.38 | 6.00 | 6.63 |
| | 2 | 1.375 | 1.63 | 2.63 | 6.25 | 6.88 |
| 2.50 | 1 (std.) | 1.000 | 1.38 | 2.38 | 6.13 | 6.75 |
| | 2 | 1.750 | 1.88 | 2.88 | 6.63 | 7.25 |
| | 3 | 1.375 | 1.63 | 2.63 | 6.38 | 7.00 |
| 3.25 | 1 (std.) | 1.375 | 1.63 | 2.75 | 7.13 | 7.88 |
| | 2 | 2.000 | 2.00 | 3.13 | 7.50 | 8.25 |
| | 3 | 1.750 | 1.88 | 3.00 | 7.38 | 8.13 |
| 4.00 | 1 (std.) | 1.750 | 1.88 | 3.00 | 7.63 | 8.50 |
| | 2 | 2.500 | 2.25 | 3.38 | 8.00 | 8.88 |
| | 3 | 2.000 | 2.00 | 3.13 | 7.75 | 8.63 |
| 5.00 | 1 (std.) | 2.000 | 2.00 | 3.13 | 8.25 | 9.13 |
| | 2 | 3.500 | 2.25 | 3.38 | 8.50 | 9.38 |
| | 3 | 2.500 | 2.25 | 3.38 | 8.50 | 9.38 |
| | 4 | 3.000 | 2.25 | 3.38 | 8.50 | 9.38 |
| 6.00 | 1 (std.) | 2.500 | 2.25 | 3.50 | 9.63 | 10.63 |
| | 2 | 4.000 | 2.25 | 3.50 | 9.63 | 10.63 |
| | 3 | 3.000 | 2.25 | 3.50 | 9.63 | 10.63 |
| | 4 | 3.500 | 2.25 | 3.50 | 9.63 | 10.63 |

### Style H – Maximum Operating Pressure / 2HD

| Bore Ø | Maximum psi Pull[3] | | | |
|---|---|---|---|---|
| | Rod Code | | | |
| | 1 | 2 | 3 | 4 |
| 1.50 | 2500 | 3000 | - | - |
| 2.00 | 3000 | 3000 | - | - |
| 2.50 | 3000 | 3000 | 3000 | - |
| 3.25 | 3000 | 3000 | 3000 | - |
| 4.00 | 3000 | 3000 | 3000 | - |
| 5.00 | 2000 | 3000 | 2000 | 2500 |
| 6.00 | 1800 | 2500 | 2000 | 2000 |

[3] Maximum pressure rating — pull application.

View Table of Contents

## Cap Square Flange Mounting
Style HB
(NFPA Style MF6)

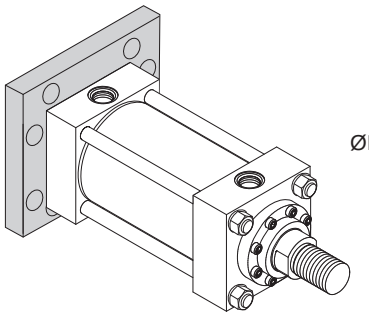

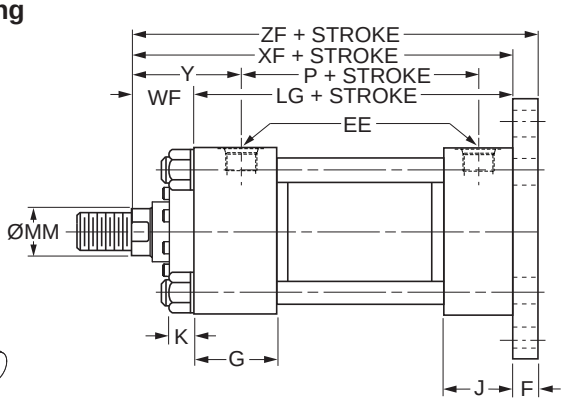


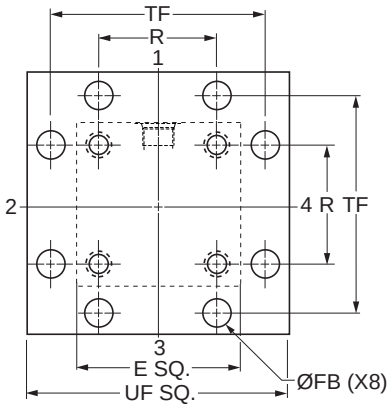


### Style HB – Dimensional and Mounting Data

| Bore Ø | E | EE | | F | FB Ø | G | J | K Max. | R | TF | UF | Add Stroke | |
|---|---|---|---|---|---|---|---|---|---|---|---|---|---|
| | | NPTF[1] | SAE[2] | | | | | | | | | LG | P |
| 1.50 | 2.50 | 1/2 | 10 | 0.38 | 0.44 | 1.75 | 1.50 | 0.42 | 1.63 | 3.44 | 4.25 | 4.63 | 2.88 |
| 2.00 | 3.00 | 1/2 | 10 | 0.63 | 0.56 | 1.75 | 1.50 | 0.57 | 2.05 | 4.13 | 5.13 | 4.63 | 2.88 |
| 2.50 | 3.50 | 1/2 | 10 | 0.63 | 0.56 | 1.75 | 1.50 | 0.57 | 2.55 | 4.63 | 5.63 | 4.75 | 3.00 |
| 3.25 | 4.50 | 3/4 | 12 | 0.75 | 0.69 | 2.00 | 1.75 | 0.68 | 3.25 | 5.88 | 7.13 | 5.50 | 3.50 |
| 4.00 | 5.00 | 3/4 | 12 | 0.88 | 0.69 | 2.00 | 1.75 | 0.68 | 3.82 | 6.38 | 7.63 | 5.75 | 3.75 |
| 5.00 | 6.50 | 3/4 | 12 | 0.88 | 0.94 | 2.00 | 1.75 | 0.94 | 4.95 | 8.19 | 9.75 | 6.25 | 4.25 |
| 6.00 | 7.50 | 1 | 16 | 1.00 | 1.06 | 2.25 | 2.25 | 1.05 | 5.73 | 9.44 | 11.25 | 7.38 | 4.88 |

[1]NPTF ports are available at no extra charge.
[2]SAE straight thread ports are standard and are indicated by port number.

### Style HB – Dimensional and Mounting Data

| Bore Ø | Rod No. | MM Rod Ø | WF | Y | Add Stroke | |
|---|---|---|---|---|---|---|
| | | | | | XF | ZF |
| 1.50 | 1 (std.) | 0.625 | 1.00 | 2.00 | 5.63 | 6.00 |
| | 2 | 1.000 | 1.38 | 2.38 | 6.00 | 6.38 |
| 2.00 | 1 (std.) | 1.000 | 1.38 | 2.38 | 6.00 | 6.63 |
| | 2 | 1.375 | 1.63 | 2.63 | 6.25 | 6.88 |
| 2.50 | 1 (std.) | 1.000 | 1.38 | 2.38 | 6.13 | 6.75 |
| | 2 | 1.750 | 1.88 | 2.88 | 6.63 | 7.25 |
| | 3 | 1.375 | 1.63 | 2.63 | 6.38 | 7.00 |
| 3.25 | 1 (std.) | 1.375 | 1.63 | 2.75 | 7.13 | 7.88 |
| | 2 | 2.000 | 2.00 | 3.13 | 7.50 | 8.25 |
| | 3 | 1.750 | 1.88 | 3.00 | 7.38 | 8.13 |
| 4.00 | 1 (std.) | 1.750 | 1.88 | 3.00 | 7.63 | 8.50 |
| | 2 | 2.500 | 2.25 | 3.38 | 8.00 | 8.88 |
| | 3 | 2.000 | 2.00 | 3.13 | 7.75 | 8.63 |
| 5.00 | 1 (std.) | 2.000 | 2.00 | 3.13 | 8.25 | 9.13 |
| | 2 | 3.500 | 2.25 | 3.38 | 8.50 | 9.38 |
| | 3 | 2.500 | 2.25 | 3.38 | 8.50 | 9.38 |
| | 4 | 3.000 | 2.25 | 3.38 | 8.50 | 9.38 |
| 6.00 | 1 (std.) | 2.500 | 2.25 | 3.50 | 9.63 | 10.63 |
| | 2 | 4.000 | 2.25 | 3.50 | 9.63 | 10.63 |
| | 3 | 3.000 | 2.25 | 3.50 | 9.63 | 10.63 |
| | 4 | 3.500 | 2.25 | 3.50 | 9.63 | 10.63 |

View Table of Contents

## Cap Rectangular Flange Mounting
Style HH
(NFPA Style ME6)

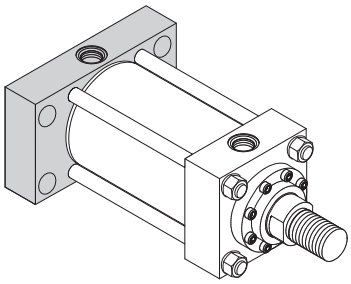

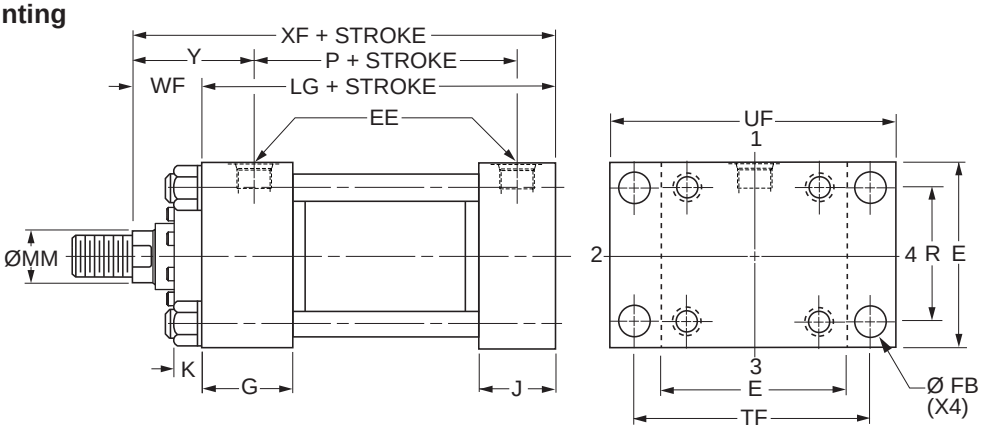


### Style HH – Dimensional and Mounting Data

| Bore Ø | E | EE | | FB Ø | G | J | K Max. | R | TF | UF | Add Stroke | |
|---|---|---|---|---|---|---|---|---|---|---|---|---|
| | | NPTF[1] | SAE[2] | | | | | | | | LG | P |
| 1.50 | 2.50 | 1/2 | 10 | 0.44 | 1.75 | 1.50 | 0.42 | 1.63 | 3.44 | 4.25 | 4.63 | 2.88 |
| 2.00 | 3.00 | 1/2 | 10 | 0.56 | 1.75 | 1.50 | 0.57 | 2.05 | 4.13 | 5.13 | 4.63 | 2.88 |
| 2.50 | 3.50 | 1/2 | 10 | 0.56 | 1.75 | 1.50 | 0.57 | 2.55 | 4.63 | 5.63 | 4.75 | 3.00 |
| 3.25 | 4.50 | 3/4 | 12 | 0.69 | 2.00 | 1.75 | 0.68 | 3.25 | 5.88 | 7.13 | 5.50 | 3.50 |
| 4.00 | 5.00 | 3/4 | 12 | 0.69 | 2.00 | 1.75 | 0.68 | 3.82 | 6.38 | 7.63 | 5.75 | 3.75 |
| 5.00 | 6.50 | 3/4 | 12 | 0.94 | 2.00 | 1.75 | 0.94 | 4.95 | 8.19 | 9.75 | 6.25 | 4.25 |
| 6.00 | 7.50 | 1 | 16 | 1.06 | 2.25 | 2.25 | 1.05 | 5.73 | 9.44 | 11.25 | 7.38 | 4.88 |

[1]NPTF ports are available at no extra charge.
[2]SAE straight thread ports are standard and are indicated by port number.

### Style HH – Dimensional and Mounting Data

| Bore Ø | Rod No. | MM Rod Ø | WF | Y | Add Stroke |
|---|---|---|---|---|---|
| | | | | | XF |
| 1.50 | 1 (std.) | 0.625 | 1.00 | 2.00 | 5.63 |
| | 2 | 1.000 | 1.38 | 2.38 | 6.00 |
| 2.00 | 1 (std.) | 1.000 | 1.38 | 2.38 | 6.00 |
| | 2 | 1.375 | 1.63 | 2.63 | 6.25 |
| 2.50 | 1 (std.) | 1.000 | 1.38 | 2.38 | 6.13 |
| | 2 | 1.750 | 1.88 | 2.88 | 6.63 |
| | 3 | 1.375 | 1.63 | 2.63 | 6.38 |
| 3.25 | 1 (std.) | 1.375 | 1.63 | 2.75 | 7.13 |
| | 2 | 2.000 | 2.00 | 3.13 | 7.50 |
| | 3 | 1.750 | 1.88 | 3.00 | 7.38 |
| 4.00 | 1 (std.) | 1.750 | 1.88 | 3.00 | 7.63 |
| | 2 | 2.500 | 2.25 | 3.38 | 8.00 |
| | 3 | 2.000 | 2.00 | 3.13 | 7.75 |
| 5.00 | 1 (std.) | 2.000 | 2.00 | 3.13 | 8.25 |
| | 2 | 3.500 | 2.25 | 3.38 | 8.50 |
| | 3 | 2.500 | 2.25 | 3.38 | 8.50 |
| | 4 | 3.000 | 2.25 | 3.38 | 8.50 |
| 6.00 | 1 (std.) | 2.500 | 2.25 | 3.50 | 9.63 |
| | 2 | 4.000 | 2.25 | 3.50 | 9.63 |
| | 3 | 3.000 | 2.25 | 3.50 | 9.63 |
| | 4 | 3.500 | 2.25 | 3.50 | 9.63 |

View Table of Contents

## Side Lug Mounting
Style C
(NFPA Style MS2)

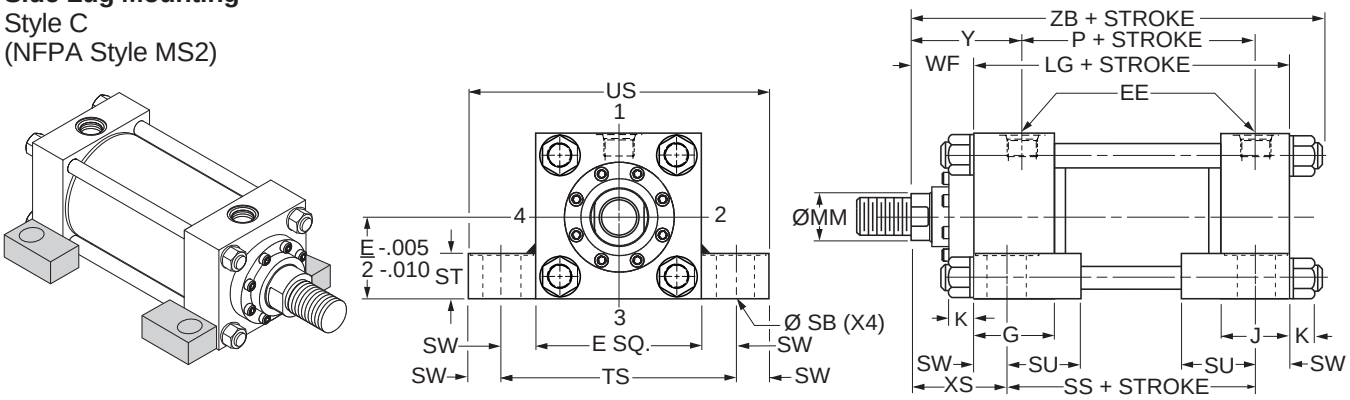


### Style C – Dimensional and Mounting Data

| Bore Ø | E | EE | | G | J | K Max. | SB[3] Ø | ST | SU | SW | TS | US | Add Stroke | | |
|---|---|---|---|---|---|---|---|---|---|---|---|---|---|---|---|
| | | NPTF[1] | SAE[2] | | | | | | | | | | LG | P | SS |
| 1.50 | 2.50 | 1/2 | 10 | 1.75 | 1.50 | 0.42 | 0.44 | 0.50 | 0.94 | 0.38 | 3.25 | 4.00 | 4.63 | 2.88 | 3.88 |
| 2.00 | 3.00 | 1/2 | 10 | 1.75 | 1.50 | 0.57 | 0.56 | 0.75 | 1.25 | 0.50 | 4.00 | 5.00 | 4.63 | 2.88 | 3.63 |
| 2.50 | 3.50 | 1/2 | 10 | 1.75 | 1.50 | 0.57 | 0.81 | 1.00 | 1.56 | 0.69 | 4.88 | 6.25 | 4.75 | 3.00 | 3.38 |
| 3.25 | 4.50 | 3/4 | 12 | 2.00 | 1.75 | 0.68 | 0.81 | 1.00 | 1.56 | 0.69 | 5.88 | 7.25 | 5.50 | 3.50 | 4.13 |
| 4.00 | 5.00 | 3/4 | 12 | 2.00 | 1.75 | 0.68 | 1.06 | 1.25 | 2.00 | 0.88 | 6.75 | 8.50 | 5.75 | 3.75 | 4.00 |
| 5.00 | 6.50 | 3/4 | 12 | 2.00 | 1.75 | 0.94 | 1.06 | 1.25 | 2.00 | 0.88 | 8.25 | 10.00 | 6.25 | 4.25 | 4.50 |
| 6.00 | 7.50 | 1 | 16 | 2.25 | 2.25 | 1.05 | 1.31 | 1.50 | 2.50 | 1.13 | 9.75 | 12.00 | 7.38 | 4.88 | 5.13 |

[1]NPTF ports are available at no extra charge.
[2]SAE straight thread ports are standard and are indicated by port number.
[3]Upper surface spot faced for socket head screws.

### Style C – Dimensional and Mounting Data

| Bore Ø | Rod No. | MM Rod Ø | WF | XS | Y | Add Stroke |
|---|---|---|---|---|---|---|
| | | | | | | ZB Max. |
| 1.50 | 1 (std.) | 0.625 | 1.00 | 1.38 | 2.00 | 6.29 |
| | 2 | 1.000 | 1.38 | 1.75 | 2.38 | 6.67 |
| 2.00 | 1 (std.) | 1.000 | 1.38 | 1.88 | 2.38 | 6.81 |
| | 2 | 1.375 | 1.63 | 2.13 | 2.63 | 7.06 |
| 2.50 | 1 (std.) | 1.000 | 1.38 | 2.06 | 2.38 | 6.93 |
| | 2 | 1.750 | 1.88 | 2.56 | 2.88 | 7.43 |
| | 3 | 1.375 | 1.63 | 2.31 | 2.63 | 7.18 |
| 3.25 | 1 (std.) | 1.375 | 1.63 | 2.31 | 2.75 | 8.06 |
| | 2 | 2.000 | 2.00 | 2.69 | 3.13 | 8.43 |
| | 3 | 1.750 | 1.88 | 2.56 | 3.00 | 8.31 |
| 4.00 | 1 (std.) | 1.750 | 1.88 | 2.75 | 3.00 | 8.56 |
| | 2 | 2.500 | 2.25 | 3.13 | 3.38 | 8.94 |
| | 3 | 2.000 | 2.00 | 2.88 | 3.13 | 8.68 |
| 5.00 | 1 (std.) | 2.000 | 2.00 | 2.88 | 3.13 | 9.44 |
| | 2 | 3.500 | 2.25 | 3.13 | 3.38 | 9.69 |
| | 3 | 2.500 | 2.25 | 3.13 | 3.38 | 9.69 |
| | 4 | 3.000 | 2.25 | 3.13 | 3.38 | 9.69 |
| 6.00 | 1 (std.) | 2.500 | 2.25 | 3.38 | 3.50 | 10.93 |
| | 2 | 4.000 | 2.25 | 3.38 | 3.50 | 10.93 |
| | 3 | 3.000 | 2.25 | 3.38 | 3.50 | 10.93 |
| | 4 | 3.500 | 2.25 | 3.38 | 3.50 | 10.93 |

View Table of Contents

## Side Tapped Mounting
Style F
(NFPA Style MS4)

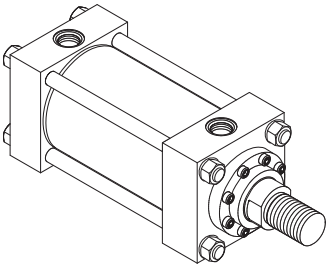

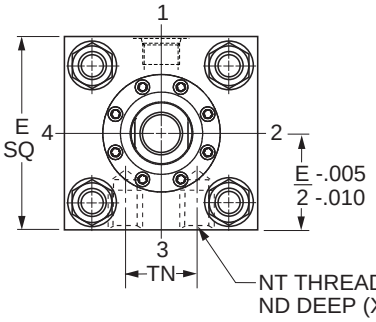


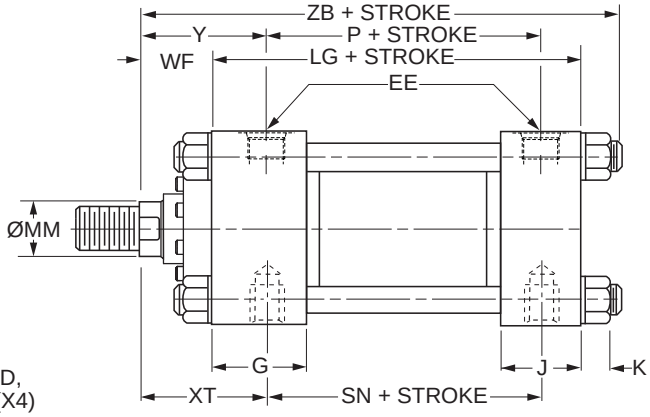


### Style F – Dimensional and Mounting Data

| Bore Ø | E | EE | | G | J | K Max. | ND | NT | TN | Add Stroke | | |
|---|---|---|---|---|---|---|---|---|---|---|---|---|
| | | NPTF[1] | SAE[2] | | | | | | | LG | P | SN |
| 1.50 | 2.50 | 1/2 | 10 | 1.75 | 1.50 | 0.42 | 0.38 | 3/8-16 | 0.75 | 4.63 | 2.88 | 2.88 |
| 2.00 | 3.00 | 1/2 | 10 | 1.75 | 1.50 | 0.57 | 0.44 | 1/2-13 | 0.94 | 4.63 | 2.88 | 2.88 |
| 2.50 | 3.50 | 1/2 | 10 | 1.75 | 1.50 | 0.57 | 0.50 | 5/8-11 | 1.31 | 4.75 | 3.00 | 3.00 |
| 3.25 | 4.50 | 3/4 | 12 | 2.00 | 1.75 | 0.68 | 0.69 | 3/4-10 | 1.50 | 5.50 | 3.50 | 3.50 |
| 4.00 | 5.00 | 3/4 | 12 | 2.00 | 1.75 | 0.68 | 0.69 | 1-8 | 2.06 | 5.75 | 3.75 | 3.75 |
| 5.00 | 6.50 | 3/4 | 12 | 2.00 | 1.75 | 0.94 | 1.00 | 1-8 | 2.94 | 6.25 | 4.25 | 4.25 |
| 6.00 | 7.50 | 1 | 16 | 2.25 | 2.25 | 1.05 | 1.25 | 1 1/4 -7 | 3.31 | 7.38 | 4.88 | 5.13 |

[1]NPTF ports are available at no extra charge.
[2]SAE straight thread ports are standard and are indicated by port number.

### Style F – Dimensional and Mounting Data

| Bore Ø | Rod No. | MM Rod Ø | WF | XT | Y | Add Stroke |
|---|---|---|---|---|---|---|
| | | | | | | ZB Max. |
| 1.50 | 1 (std.) | 0.625 | 1.00 | 2.00 | 2.00 | 6.29 |
| | 2 | 1.000 | 1.38 | 2.38 | 2.38 | 6.67 |
| 2.00 | 1 (std.) | 1.000 | 1.38 | 2.38 | 2.38 | 6.81 |
| | 2 | 1.375 | 1.63 | 2.63 | 2.63 | 7.06 |
| 2.50 | 1 (std.) | 1.000 | 1.38 | 2.38 | 2.38 | 6.93 |
| | 2 | 1.750 | 1.88 | 2.88 | 2.88 | 7.43 |
| | 3 | 1.375 | 1.63 | 2.63 | 2.63 | 7.18 |
| 3.25 | 1 (std.) | 1.375 | 1.63 | 2.75 | 2.75 | 8.06 |
| | 2 | 2.000 | 2.00 | 3.13 | 3.13 | 8.43 |
| | 3 | 1.750 | 1.88 | 3.00 | 3.00 | 8.31 |
| 4.00 | 1 (std.) | 1.750 | 1.88 | 3.00 | 3.00 | 8.56 |
| | 2 | 2.500 | 2.25 | 3.38 | 3.38 | 8.94 |
| | 3 | 2.000 | 2.00 | 3.13 | 3.13 | 8.68 |
| 5.00 | 1 (std.) | 2.000 | 2.00 | 3.13 | 3.13 | 9.44 |
| | 2 | 3.500 | 2.25 | 3.38 | 3.38 | 9.69 |
| | 3 | 2.500 | 2.25 | 3.38 | 3.38 | 9.69 |
| | 4 | 3.000 | 2.25 | 3.38 | 3.38 | 9.69 |
| 6.00 | 1 (std.) | 2.500 | 2.25 | 3.50 | 3.50 | 10.93 |
| | 2 | 4.000 | 2.25 | 3.50 | 3.50 | 10.93 |
| | 3 | 3.000 | 2.25 | 3.50 | 3.50 | 10.93 |
| | 4 | 3.500 | 2.25 | 3.50 | 3.50 | 10.93 |

View Table of Contents

## Cap Fixed Clevis Mounting
Style BB
(NFPA Style MP1)

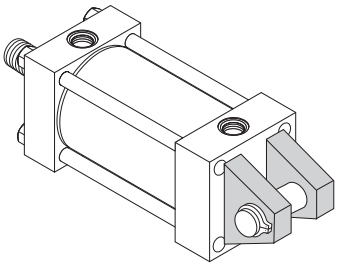

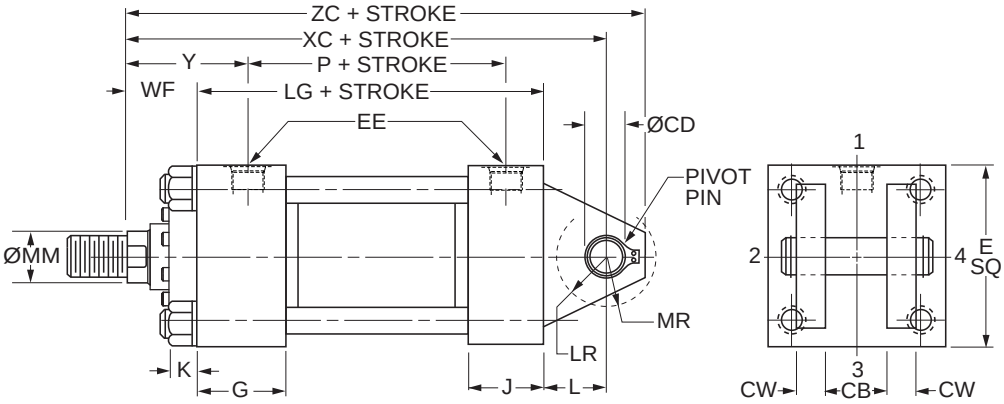


### Style BB – Dimensional and Mounting Data

| Bore Ø | E | EE | | CB | CD[3] Ø +.000 -.002 | CW | G | J | K Max. | L | LR | MR | Add Stroke | |
|---|---|---|---|---|---|---|---|---|---|---|---|---|---|---|
| | | NPTF[1] | SAE[2] | | | | | | | | | | LG | P |
| 1.50 | 2.50 | 1/2 | 10 | 0.75 | .501 | 0.50 | 1.75 | 1.50 | 0.42 | 0.75 | 0.56 | 0.63 | 4.63 | 2.88 |
| 2.00 | 3.00 | 1/2 | 10 | 1.25 | .751 | 0.63 | 1.75 | 1.50 | 0.57 | 1.25 | 1.00 | 0.94 | 4.63 | 2.88 |
| 2.50 | 3.50 | 1/2 | 10 | 1.25 | .751 | 0.63 | 1.75 | 1.50 | 0.57 | 1.25 | 0.94 | 0.94 | 4.75 | 3.00 |
| 3.25 | 4.50 | 3/4 | 12 | 1.50 | 1.001 | 0.75 | 2.00 | 1.75 | 0.68 | 1.50 | 1.25 | 1.19 | 5.50 | 3.50 |
| 4.00 | 5.00 | 3/4 | 12 | 2.00 | 1.376 | 1.00 | 2.00 | 1.75 | 0.68 | 2.13 | 1.75 | 1.63 | 5.75 | 3.75 |
| 5.00 | 6.50 | 3/4 | 12 | 2.50 | 1.751 | 1.25 | 2.00 | 1.75 | 0.94 | 2.25 | 2.06 | 2.13 | 6.25 | 4.25 |
| 6.00 | 7.50 | 1 | 16 | 2.50 | 2.001 | 1.25 | 2.25 | 2.25 | 1.05 | 2.50 | 2.31 | 2.38 | 7.38 | 4.88 |

[1]NPTF ports are available at no extra charge.
[2]SAE straight thread ports are standard and are indicated by port number.
[3]Diameter CD is Pin Diameter.

### Style BB – Dimensional and Mounting Data

| Bore Ø | Rod No. | MM Rod Ø | WF | Y | Add Stroke | |
|---|---|---|---|---|---|---|
| | | | | | XC | ZC |
| 1.50 | 1 (std.) | 0.625 | 1.00 | 2.00 | 6.38 | 6.88 |
| | 2 | 1.000 | 1.38 | 2.38 | 6.75 | 7.25 |
| 2.00 | 1 (std.) | 1.000 | 1.38 | 2.38 | 7.25 | 8.00 |
| | 2 | 1.375 | 1.63 | 2.63 | 7.50 | 8.25 |
| 2.50 | 1 (std.) | 1.000 | 1.38 | 2.38 | 7.38 | 8.13 |
| | 2 | 1.750 | 1.88 | 2.88 | 7.88 | 8.63 |
| | 3 | 1.375 | 1.63 | 2.63 | 7.63 | 8.38 |
| 3.25 | 1 (std.) | 1.375 | 1.63 | 2.75 | 8.63 | 9.63 |
| | 2 | 2.000 | 2.00 | 3.13 | 9.00 | 10.00 |
| | 3 | 1.750 | 1.88 | 3.00 | 8.88 | 9.88 |
| 4.00 | 1 (std.) | 1.750 | 1.88 | 3.00 | 9.75 | 11.13 |
| | 2 | 2.500 | 2.25 | 3.38 | 10.13 | 11.50 |
| | 3 | 2.000 | 2.00 | 3.13 | 9.88 | 11.25 |
| 5.00 | 1 (std.) | 2.000 | 2.00 | 3.13 | 10.50 | 12.25 |
| | 2 | 3.500 | 2.25 | 3.38 | 10.75 | 12.50 |
| | 3 | 2.500 | 2.25 | 3.38 | 10.75 | 12.50 |
| | 4 | 3.000 | 2.25 | 3.38 | 10.75 | 12.50 |
| 6.00 | 1 (std.) | 2.500 | 2.25 | 3.50 | 12.13 | 14.13 |
| | 2 | 4.000 | 2.25 | 3.50 | 12.13 | 14.13 |
| | 3 | 3.000 | 2.25 | 3.50 | 12.13 | 14.13 |
| | 4 | 3.500 | 2.25 | 3.50 | 12.13 | 14.13 |

View Table of Contents

## Head Trunnion Mounting
Style D
(NFPA Style MT1)

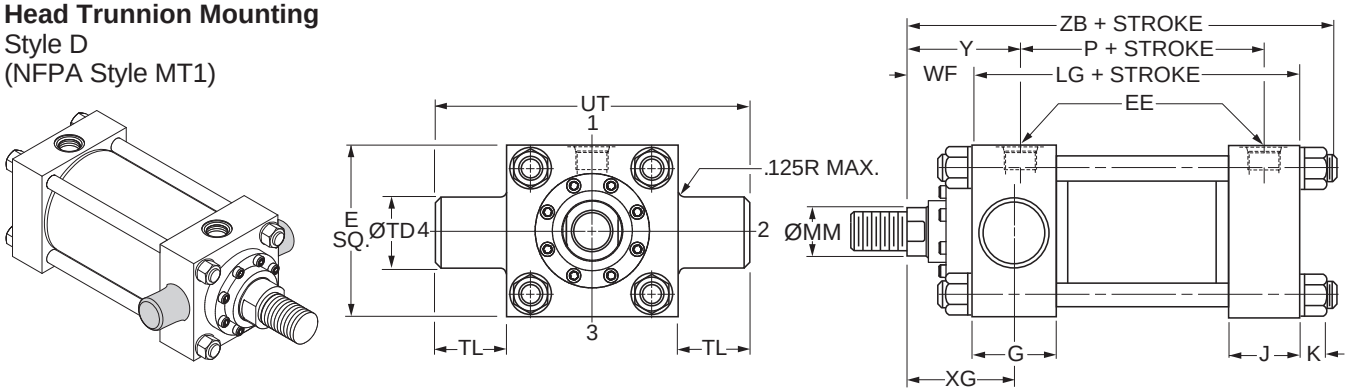


### Style D – Dimensional and Mounting Data

| Bore Ø | E | EE | | G | J | K Max. | TD Ø +.000 -.001 | TL | UT | Add Stroke | |
|---|---|---|---|---|---|---|---|---|---|---|---|
| | | NPTF[1] | SAE[2] | | | | | | | LG | P |
| 1.50 | 2.50 | 1/2 | 10 | 1.75 | 1.50 | 0.42 | 1.000 | 1.00 | 4.50 | 4.63 | 2.88 |
| 2.00 | 3.00 | 1/2 | 10 | 1.75 | 1.50 | 0.57 | 1.375 | 1.38 | 5.75 | 4.63 | 2.88 |
| 2.50 | 3.50 | 1/2 | 10 | 1.75 | 1.50 | 0.57 | 1.375 | 1.38 | 6.25 | 4.75 | 3.00 |
| 3.25 | 4.50 | 3/4 | 12 | 2.00 | 1.75 | 0.68 | 1.750 | 1.75 | 8.00 | 5.50 | 3.50 |
| 4.00 | 5.00 | 3/4 | 12 | 2.00 | 1.75 | 0.68 | 1.750 | 1.75 | 8.50 | 5.75 | 3.75 |
| 5.00 | 6.50 | 3/4 | 12 | 2.00 | 1.75 | 0.94 | 1.750 | 1.75 | 10.00 | 6.25 | 4.25 |
| 6.00 | 7.50 | 1 | 16 | 2.25 | 2.25 | 1.05 | 2.000 | 2.00 | 11.50 | 7.38 | 4.88 |

[1]NPTF ports are available at no extra charge.
[2]SAE straight thread ports are standard and are indicated by port number.

### Style D – Dimensional and Mounting Data

| Bore Ø | Rod No. | MM Rod Ø | WF | XG | Y | Add Stroke ZB Max. |
|---|---|---|---|---|---|---|
| 1.50 | 1 (std.) | 0.625 | 1.00 | 1.88 | 2.00 | 6.29 |
| | 2 | 1.000 | 1.38 | 2.25 | 2.38 | 6.67 |
| 2.00 | 1 (std.) | 1.000 | 1.38 | 2.25 | 2.38 | 6.81 |
| | 2 | 1.375 | 1.63 | 2.50 | 2.63 | 7.06 |
| 2.50 | 1 (std.) | 1.000 | 1.38 | 2.25 | 2.38 | 6.93 |
| | 2 | 1.750 | 1.88 | 2.75 | 2.88 | 7.43 |
| | 3 | 1.375 | 1.63 | 2.50 | 2.63 | 7.18 |
| 3.25 | 1 (std.) | 1.375 | 1.63 | 2.63 | 2.75 | 8.06 |
| | 2 | 2.000 | 2.00 | 3.00 | 3.13 | 8.43 |
| | 3 | 1.750 | 1.88 | 2.88 | 3.00 | 8.31 |
| 4.00 | 1 (std.) | 1.750 | 1.88 | 2.88 | 3.00 | 8.56 |
| | 2 | 2.500 | 2.25 | 3.25 | 3.38 | 8.94 |
| | 3 | 2.000 | 2.00 | 3.00 | 3.13 | 8.68 |
| 5.00 | 1 (std.) | 2.000 | 2.00 | 3.00 | 3.13 | 9.44 |
| | 2 | 3.500 | 2.25 | 3.25 | 3.38 | 9.69 |
| | 3 | 2.500 | 2.25 | 3.25 | 3.38 | 9.69 |
| | 4 | 3.000 | 2.25 | 3.25 | 3.38 | 9.69 |
| 6.00 | 1 (std.) | 2.500 | 2.25 | 3.38 | 3.50 | 10.93 |
| | 2 | 4.000 | 2.25 | 3.38 | 3.50 | 10.93 |
| | 3 | 3.000 | 2.25 | 3.38 | 3.50 | 10.93 |
| | 4 | 3.500 | 2.25 | 3.38 | 3.50 | 10.93 |

View Table of Contents

## Cap Trunnion Mounting
Style DB
(NFPA Style MT2)

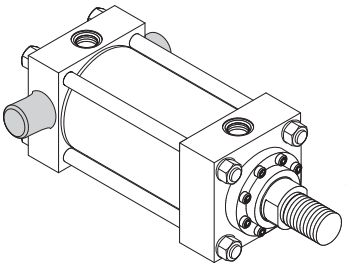

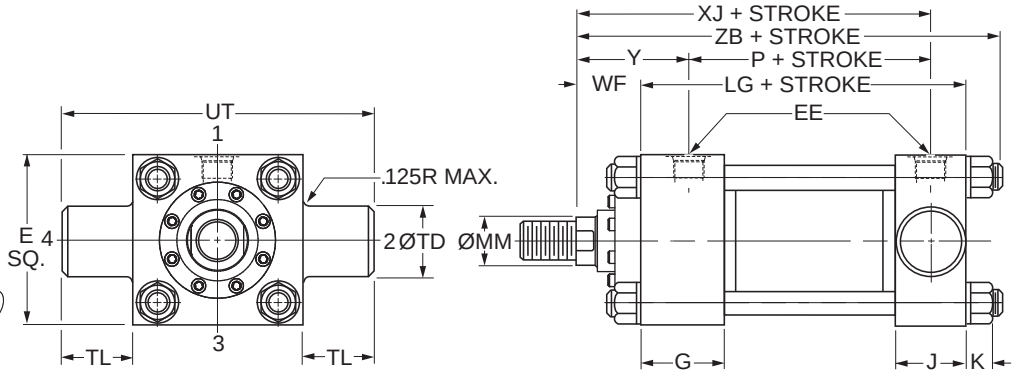


### Style DB – Dimensional and Mounting Data

| Bore Ø | E | EE | | G | J | K Max. | TD Ø +.000 -.001 | TL | UT | Add Stroke | |
|---|---|---|---|---|---|---|---|---|---|---|---|
| | | NPTF[1] | SAE[2] | | | | | | | LG | P |
| 1.50 | 2.50 | 1/2 | 10 | 1.75 | 1.50 | 0.42 | 1.000 | 1.00 | 4.50 | 4.63 | 2.88 |
| 2.00 | 3.00 | 1/2 | 10 | 1.75 | 1.50 | 0.57 | 1.375 | 1.38 | 5.75 | 4.63 | 2.88 |
| 2.50 | 3.50 | 1/2 | 10 | 1.75 | 1.50 | 0.57 | 1.375 | 1.38 | 6.25 | 4.75 | 3.00 |
| 3.25 | 4.50 | 3/4 | 12 | 2.00 | 1.75 | 0.68 | 1.750 | 1.75 | 8.00 | 5.50 | 3.50 |
| 4.00 | 5.00 | 3/4 | 12 | 2.00 | 1.75 | 0.68 | 1.750 | 1.75 | 8.50 | 5.75 | 3.75 |
| 5.00 | 6.50 | 3/4 | 12 | 2.00 | 1.75 | 0.94 | 1.750 | 1.75 | 10.00 | 6.25 | 4.25 |
| 6.00 | 7.50 | 1 | 16 | 2.25 | 2.25 | 1.05 | 2.000 | 2.00 | 11.50 | 7.38 | 4.88 |

[1]NPTF ports are available at no extra charge.
[2]SAE straight thread ports are standard and are indicated by port number.

### Style DB – Dimensional and Mounting Data

| Bore Ø | Rod No. | MM Rod Ø | WF | Y | Add Stroke | |
|---|---|---|---|---|---|---|
| | | | | | XJ | ZB Max. |
| 1.50 | 1 (std.) | 0.625 | 1.00 | 2.00 | 4.88 | 6.29 |
| | 2 | 1.000 | 1.38 | 2.38 | 5.25 | 6.67 |
| 2.00 | 1 (std.) | 1.000 | 1.38 | 2.38 | 5.25 | 6.81 |
| | 2 | 1.375 | 1.63 | 2.63 | 5.50 | 7.06 |
| 2.50 | 1 (std.) | 1.000 | 1.38 | 2.38 | 5.38 | 6.93 |
| | 2 | 1.750 | 1.88 | 2.88 | 5.88 | 7.43 |
| | 3 | 1.375 | 1.63 | 2.63 | 5.63 | 7.18 |
| 3.25 | 1 (std.) | 1.375 | 1.63 | 2.75 | 6.25 | 8.06 |
| | 2 | 2.000 | 2.00 | 3.13 | 6.63 | 8.43 |
| | 3 | 1.750 | 1.88 | 3.00 | 6.50 | 8.31 |
| 4.00 | 1 (std.) | 1.750 | 1.88 | 3.00 | 6.75 | 8.56 |
| | 2 | 2.500 | 2.25 | 3.38 | 7.13 | 8.94 |
| | 3 | 2.000 | 2.00 | 3.13 | 6.88 | 8.68 |
| 5.00 | 1 (std.) | 2.000 | 2.00 | 3.13 | 7.38 | 9.44 |
| | 2 | 3.500 | 2.25 | 3.38 | 7.63 | 9.69 |
| | 3 | 2.500 | 2.25 | 3.38 | 7.63 | 9.69 |
| | 4 | 3.000 | 2.25 | 3.38 | 7.63 | 9.69 |
| 6.00 | 1 (std.) | 2.500 | 2.25 | 3.50 | 8.38 | 10.93 |
| | 2 | 4.000 | 2.25 | 3.50 | 8.38 | 10.93 |
| | 3 | 3.000 | 2.25 | 3.50 | 8.38 | 10.93 |
| | 4 | 3.500 | 2.25 | 3.50 | 8.38 | 10.93 |

View Table of Contents

## Intermediate Fixed Trunnion Mounting
Style DD
(NFPA Style MT4)

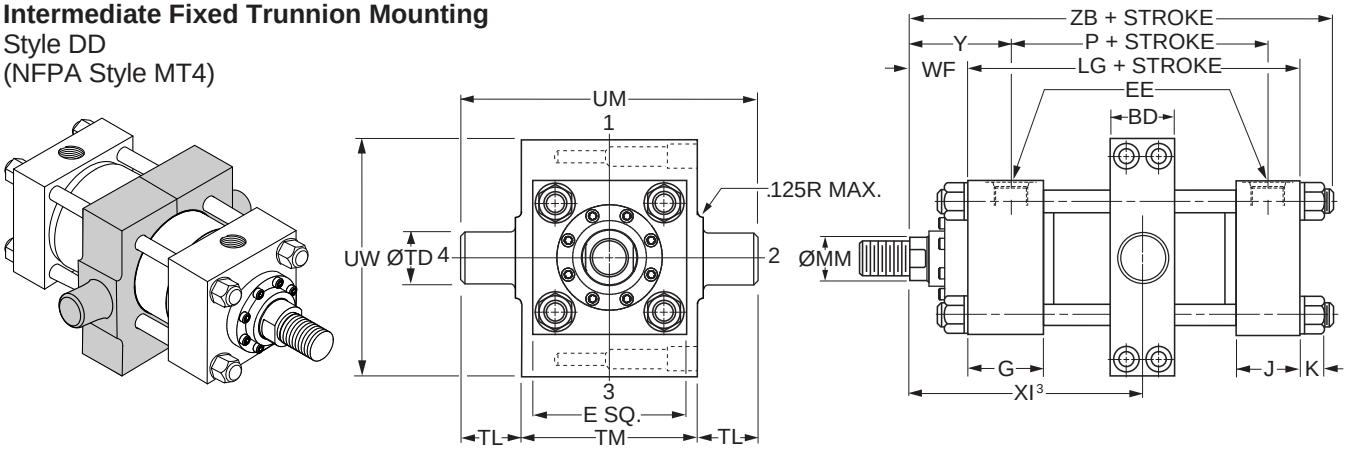


### Style DD – Dimensional and Mounting Data

| Bore Ø | BD | E | EE | | G | J | K Max. | TD Ø +.000 -.001 | TL | TM | UM | UW | Add Stroke | |
|---|---|---|---|---|---|---|---|---|---|---|---|---|---|---|
| | | | NPTF[1] | SAE[2] | | | | | | | | | LG | P |
| 1.50 | 1.25 | 2.50 | 1/2 | 10 | 1.75 | 1.50 | 0.42 | 1.000 | 1.00 | 3.00 | 5.00 | 3.38 | 4.63 | 2.88 |
| 2.00 | 1.50 | 3.00 | 1/2 | 10 | 1.75 | 1.50 | 0.57 | 1.375 | 1.38 | 3.50 | 6.25 | 4.13 | 4.63 | 2.88 |
| 2.50 | 1.50 | 3.50 | 1/2 | 10 | 1.75 | 1.50 | 0.57 | 1.375 | 1.38 | 4.00 | 6.75 | 4.63 | 4.75 | 3.00 |
| 3.25 | 2.00 | 4.50 | 3/4 | 12 | 2.00 | 1.75 | 0.68 | 1.750 | 1.75 | 5.00 | 8.50 | 5.81 | 5.50 | 3.50 |
| 4.00 | 2.00 | 5.00 | 3/4 | 12 | 2.00 | 1.75 | 0.68 | 1.750 | 1.75 | 5.50 | 9.00 | 6.38 | 5.75 | 3.75 |
| 5.00 | 2.00 | 6.50 | 3/4 | 12 | 2.00 | 1.75 | 0.94 | 1.750 | 1.75 | 7.00 | 10.50 | 7.75 | 6.25 | 4.25 |
| 6.00 | 3.00 | 7.50 | 1 | 16 | 2.25 | 2.25 | 1.05 | 2.000 | 2.00 | 8.50 | 12.50 | 10.38 | 7.38 | 4.88 |

[1]NPTF ports are available at no extra charge.
[2]SAE straight thread ports are standard and are indicated by port number.

### Style DD – Dimensional and Mounting Data

| Bore Ø | Rod No. | MM Rod Ø | WF | Y | Minimum XI[3] | | Style DD Min. Stroke | Add Stroke | | |
|---|---|---|---|---|---|---|---|---|---|---|
| | | | | | Styles 4, 8 & 9 | Style 55 | | Maximum XI[4] | | ZB Max |
| | | | | | | | | Styles 4, 8 & 9 | Style 55 | |
| 1.50 | 1 (std.) | 0.625 | 1.00 | 2.00 | 3.44 | 4.19 | 0 | 3.44 | 4.19 | 6.29 |
| | 2 | 1.000 | 1.38 | 2.38 | 3.81 | 4.81 | 0 | 3.81 | 4.81 | 6.67 |
| 2.00 | 1 (std.) | 1.000 | 1.38 | 2.38 | 3.94 | 4.94 | 0.25 | 3.69 | 4.69 | 6.81 |
| | 2 | 1.375 | 1.63 | 2.63 | 4.19 | 5.31 | 0.25 | 3.94 | 5.06 | 7.06 |
| 2.50 | 1 (std.) | 1.000 | 1.38 | 2.38 | 3.94 | 4.94 | 0.13 | 3.81 | 4.81 | 6.93 |
| | 2 | 1.750 | 1.88 | 2.88 | 4.44 | 5.69 | 0.13 | 4.31 | 5.56 | 7.43 |
| | 3 | 1.375 | 1.63 | 2.63 | 4.19 | 5.31 | 0.13 | 4.06 | 5.19 | 7.18 |
| 3.25 | 1 (std.) | 1.375 | 1.63 | 2.75 | 4.69 | 5.81 | 0.38 | 4.31 | 5.44 | 8.06 |
| | 2 | 2.000 | 2.00 | 3.13 | 5.06 | 6.81 | 0.38 | 4.69 | 6.44 | 8.43 |
| | 3 | 1.750 | 1.88 | 3.00 | 4.94 | 6.19 | 0.38 | 4.56 | 5.81 | 8.31 |
| 4.00 | 1 (std.) | 1.750 | 1.88 | 3.00 | 4.94 | 6.19 | 0.13 | 4.81 | 6.06 | 8.56 |
| | 2 | 2.500 | 2.25 | 3.38 | 5.31 | 7.56 | 0.13 | 5.19 | 7.44 | 8.94 |
| | 3 | 2.000 | 2.00 | 3.13 | 5.06 | 6.81 | 0.13 | 4.94 | 6.69 | 8.68 |
| 5.00 | 1 (std.) | 2.000 | 2.00 | 3.13 | 5.06 | 6.81 | 0 | 5.44 | 7.19 | 9.44 |
| | 2 | 3.500 | 2.25 | 3.38 | 5.31 | 8.69 | 0 | 5.69 | 9.06 | 9.69 |
| | 3 | 2.500 | 2.25 | 3.38 | 5.31 | 7.56 | 0 | 5.69 | 7.94 | 9.69 |
| | 4 | 3.000 | 2.25 | 3.38 | 5.31 | 7.94 | 0 | 5.69 | 8.31 | 9.69 |
| 6.00 | 1 (std.) | 2.500 | 2.25 | 3.50 | 6.06 | 8.31 | 0.25 | 5.81 | 8.06 | 10.93 |
| | 2 | 4.000 | 2.25 | 3.50 | 6.06 | 9.56 | 0.25 | 5.81 | 9.31 | 10.93 |
| | 3 | 3.000 | 2.25 | 3.50 | 6.06 | 8.69 | 0.25 | 5.81 | 8.44 | 10.93 |
| | 4 | 3.500 | 2.25 | 3.50 | 6.06 | 9.44 | 0.25 | 5.81 | 9.19 | 10.93 |

[3]Dimension XI to be specified by customer. Reference point for rod end Style 55 is end of piston rod.
[4]Dimensions shown are valid for standard WF and WG dimension.

View Table of Contents

## Heavy Duty Intermediate Fixed Trunnion Mounting

Style DE
(NFPA Style MT4)

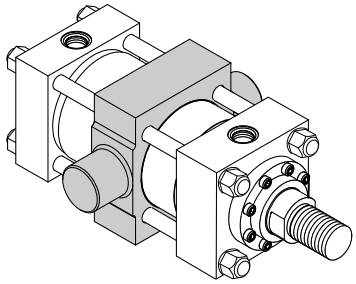

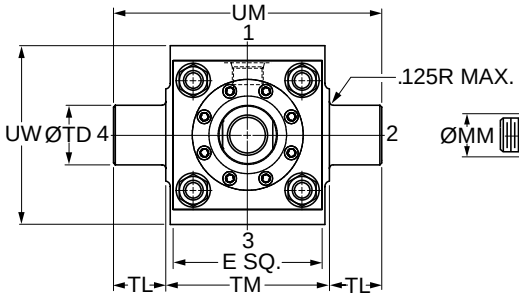


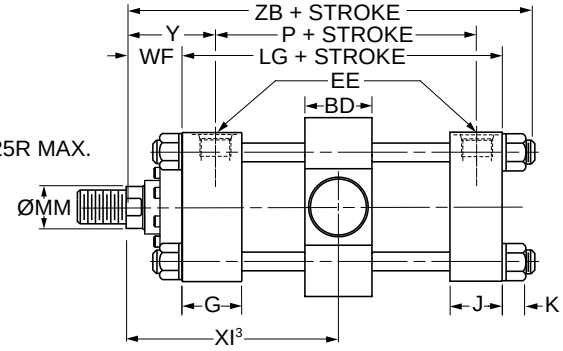


### Style DE – Dimensional and Mounting Data

| Bore Ø | BD | E | EE | | G | J | K Max. | TD Ø +.000 -.001 | TL | TM | UM | UW | Add Stroke | |
|---|---|---|---|---|---|---|---|---|---|---|---|---|---|---|
| | | | NPTF[1] | SAE[2] | | | | | | | | | LG | P |
| 4.00 | 2.25 | 5.00 | 3/4 | 12 | 2.00 | 1.75 | 0.68 | 2.000 | 1.75 | 5.50 | 9.00 | 6.00 | 5.75 | 3.75 |
| 5.00 | 2.75 | 6.50 | 3/4 | 12 | 2.00 | 1.75 | 0.94 | 2.500 | 1.75 | 7.00 | 10.50 | 7.50 | 6.25 | 4.25 |
| 6.00 | 3.25 | 7.50 | 1 | 16 | 2.25 | 2.25 | 1.05 | 3.000 | 2.00 | 8.50 | 12.50 | 9.50 | 7.38 | 4.88 |

[1]NPTF ports are available at no extra charge.
[2]SAE straight thread ports are standard and are indicated by port number.

### Style DE – Dimensional and Mounting Data

| Bore Ø | Rod No. | MM Rod Ø | WF | Y | Minimum XI[3] | | Style DE Minimum Stroke | Add Stroke | | |
|---|---|---|---|---|---|---|---|---|---|---|
| | | | | | Styles 4, 8 & 9 | Style 55 | | Maximum XI[4] | | ZB Max. |
| | | | | | | | | Styles 4, 8 & 9 | Style 55 | |
| 4.00 | 1 (std.) | 1.750 | 1.88 | 3.00 | 5.06 | 6.31 | 0.38 | 4.69 | 5.94 | 8.56 |
| | 2 | 2.500 | 2.25 | 3.38 | 5.44 | 7.69 | 0.38 | 5.06 | 7.31 | 8.94 |
| | 3 | 2.000 | 2.00 | 3.13 | 5.19 | 6.94 | 0.38 | 4.81 | 6.56 | 8.68 |
| 5.00 | 1 (std.) | 2.000 | 2.00 | 3.13 | 5.44 | 7.19 | 0.38 | 5.06 | 6.81 | 9.44 |
| | 2 | 3.500 | 2.25 | 3.38 | 5.69 | 9.06 | 0.38 | 5.31 | 8.69 | 9.69 |
| | 3 | 2.500 | 2.25 | 3.38 | 5.69 | 7.94 | 0.38 | 5.31 | 7.56 | 9.69 |
| | 4 | 3.000 | 2.25 | 3.38 | 5.69 | 8.31 | 0.38 | 5.31 | 7.94 | 9.69 |
| 6.00 | 1 (std.) | 2.500 | 2.25 | 3.50 | 6.19 | 8.44 | 0.50 | 5.69 | 7.94 | 10.93 |
| | 2 | 4.000 | 2.25 | 3.50 | 6.19 | 9.69 | 0.50 | 5.69 | 9.19 | 10.93 |
| | 3 | 3.000 | 2.25 | 3.50 | 6.19 | 8.81 | 0.50 | 5.69 | 8.31 | 10.93 |
| | 4 | 3.500 | 2.25 | 3.50 | 6.19 | 9.56 | 0.50 | 5.69 | 9.06 | 10.93 |

[3]Dimension XI to be specified by customer. Reference point for rod end Style 55 is end of piston rod.
[4]Dimensions shown are valid for standard WF and WG dimension.

View Table of Contents

## Spherical Bearing Mounting
Style SB

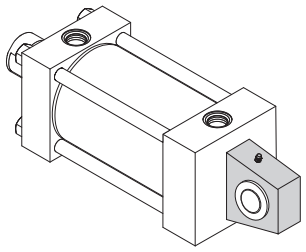

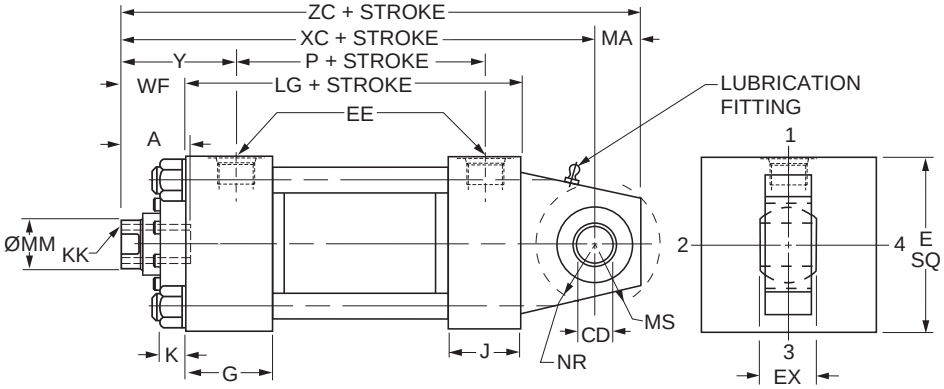


### Style SB – Dimensional and Mounting Data

| Bore Ø | A | CD[1] Ø +0.0000 -0.0005 | E | EE | | EX | G | J | K Max. | MA | MS | NR | Add Stroke | | Maximum Operating psi[2] |
|---|---|---|---|---|---|---|---|---|---|---|---|---|---|---|---|
| | | | | NPTF | SAE | | | | | | | | LG | P | |
| 1.50 | 0.75 | 0.5000 | 2.50 | 1/2 | 10 | 0.44 | 1.75 | 1.50 | 0.42 | 0.75 | 0.94 | 0.63 | 4.63 | 2.88 | 1500 |
| 2.00 | 1.13 | 0.7500 | 3.00 | 1/2 | 10 | 0.66 | 1.75 | 1.50 | 0.57 | 1.00 | 1.38 | 1.00 | 4.63 | 2.88 | 2200 |
| 2.50 | 1.13 | 0.7500 | 3.50 | 1/2 | 10 | 0.66 | 1.75 | 1.50 | 0.57 | 1.00 | 1.38 | 1.00 | 4.75 | 3.00 | 1450 |
| 3.25 | 1.63 | 1.0000 | 4.50 | 3/4 | 12 | 0.88 | 2.00 | 1.75 | 0.68 | 1.25 | 1.69 | 1.25 | 5.50 | 3.50 | 1500 |
| 4.00 | 2.00 | 1.3750 | 5.00 | 3/4 | 12 | 1.19 | 2.00 | 1.75 | 0.68 | 1.88 | 2.44 | 1.63 | 5.75 | 3.75 | 1850 |
| 5.00 | 2.25 | 1.7500 | 6.50 | 3/4 | 12 | 1.53 | 2.00 | 1.75 | 0.94 | 2.50 | 2.88 | 2.06 | 6.25 | 4.25 | 2000 |
| 6.00 | 3.00 | 2.0000 | 7.50 | 1 | 16 | 1.75 | 2.25 | 2.25 | 1.05[3] | 2.50 | 3.31 | 2.38 | 7.38 | 4.88 | 1800 |

[1] Diameter CD is hole diameter.
[2] Maximum operating pressure at 4:1 design factor is based on tensile strength of material. Pressure ratings are based on standard bearing ratings.
[3] 6.00" bore is constructed with tie rod nuts on both ends.

### Style SB – Dimensional and Mounting Data

| Bore Ø | Rod No. | MM Rod Ø | Thread | | WF | Y | Add Stroke | | |
|---|---|---|---|---|---|---|---|---|---|
| | | | Style 9 KK[4] | Style 7 KK[4] | | | XC | XL | ZC |
| 1.50 | 1 (std.) | 0.625 | 7/16-20 | — | 1.00 | 2.00 | 6.38 | 7.25 | 7.13 |
| | 2 | 1.000 | — | 7/16-20 | 1.38 | 2.38 | 6.75 | 7.63 | 7.50 |
| 2.00 | 1 (std.) | 1.000 | 3/4-16 | — | 1.38 | 2.38 | 7.25 | 8.50 | 8.25 |
| | 2 | 1.375 | — | 3/4-16 | 1.63 | 2.63 | 7.50 | 8.75 | 8.50 |
| 2.50 | 1 (std.) | 1.000 | 3/4-16 | — | 1.38 | 2.38 | 7.38 | 8.63 | 8.38 |
| | 2 | 1.750 | — | 3/4-16 | 1.88 | 2.88 | 7.88 | 9.13 | 8.88 |
| | 3 | 1.375 | — | 3/4-16 | 1.63 | 2.63 | 7.63 | 8.88 | 8.63 |
| 3.25 | 1 (std.) | 1.375 | 1-14 | — | 1.63 | 2.75 | 8.63 | 10.50 | 9.88 |
| | 2 | 2.000 | — | 1-14 | 2.00 | 3.13 | 9.00 | 10.88 | 10.25 |
| | 3 | 1.750 | — | 1-14 | 1.88 | 3.00 | 8.88 | 10.75 | 10.13 |
| 4.00 | 1 (std.) | 1.750 | 1 1/4-12 | — | 1.88 | 3.00 | 9.75 | 11.88 | 11.63 |
| | 2 | 2.500 | — | 1 1/4-12 | 2.25 | 3.38 | 10.13 | 12.25 | 12.00 |
| | 3 | 2.000 | — | 1 1/4-12 | 2.00 | 3.13 | 9.88 | 12.00 | 11.75 |
| 5.00 | 1 (std.) | 2.000 | 1 1/2-12 | — | 2.00 | 3.13 | 10.50 | 13.00 | 13.00 |
| | 2 | 3.500 | — | 1 1/2-12 | 2.25 | 3.38 | 10.75 | 13.25 | 13.25 |
| | 3 | 2.500 | — | 1 1/2-12 | 2.25 | 3.38 | 10.75 | 13.25 | 13.25 |
| | 4 | 3.000 | — | 1 1/2-12 | 2.25 | 3.38 | 10.75 | 13.25 | 13.25 |
| 6.00 | 1 (std.) | 2.500 | 1 7/8-12 | — | 2.25 | 3.50 | 12.13 | 14.88 | 14.63 |
| | 2 | 4.000 | — | 1 7/8-12 | 2.25 | 3.50 | 12.13 | 14.88 | 14.63 |
| | 3 | 3.000 | — | 1 7/8-12 | 2.25 | 3.50 | 12.13 | 14.88 | 14.63 |
| | 4 | 3.500 | — | 1 7/8-12 | 2.25 | 3.50 | 12.13 | 14.88 | 14.63 |

[4] Style 9 and Style 7 threads listed are for a spherical rod eye (sold separately) with pin diameter that matches the cap pin.

### Style SB – Recommended maximum swivel angle on each side of the cylinder centerline.

| Bore Ø | Head End Mounted | | Cap End Mounted | |
|---|---|---|---|---|
| | Angle a | Tan. of a | Angle a | Tan. of a |
| 1.50 | 2.00° | .035 | 2.00° | .035 |
| 2.00 | 2.50° | .044 | 4.50° | .079 |
| 2.50 | 2.50° | .044 | 4.50° | .079 |
| 3.25 | 3.00° | .052 | 3.00° | .052 |
| 4.00 | 2.50° | .044 | 3.00° | .052 |
| 5.00 | 3.00° | .052 | 3.00° | .052 |
| 6.00 | 3.00° | .052 | 3.00° | .052 |

Note: Dimension X is the maximum off center mounting of the cylinder. To determine dimension X for various stroke lengths multiply the distance between pivot pin holes by tangent of angle a. For extended position use X = XL + 2X stroke.

### Mounting Information
Head End Mounting

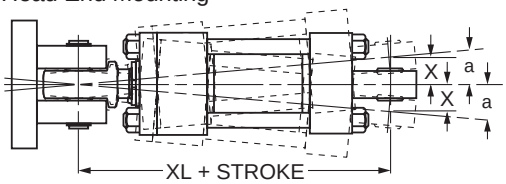


Cap End Mounting

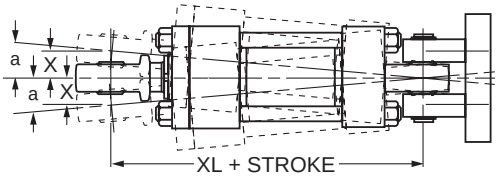

View Table of Contents

## Spherical Bearing Mounting
Style SE

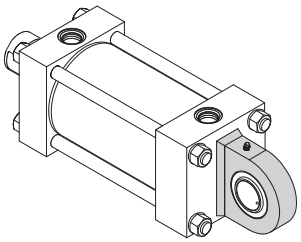

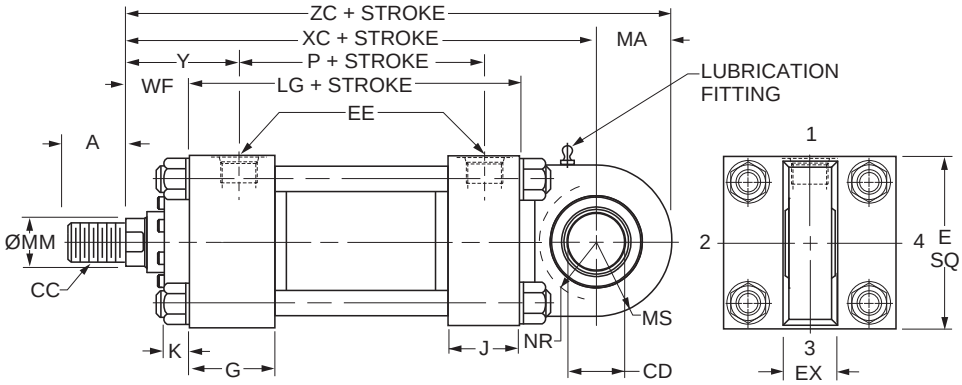


### Style SE – Dimensional and Mounting Data

| Bore Ø | A | CD[1] Ø +0.0000 -0.0005 | E | EE | | EX | G | J | K Max. | MA | MS | NR | Add Stroke | |
|---|---|---|---|---|---|---|---|---|---|---|---|---|---|---|
| | | | | NPTF | SAE | | | | | | | | LG | P |
| 1.50 | 0.75 | 0.7500 | 2.50 | 1/2 | 10 | 0.66 | 1.75 | 1.50 | 0.42 | 1.00 | 1.00 | 0.75 | 4.63 | 2.88 |
| 2.00 | 1.13 | 1.0000 | 3.00 | 1/2 | 10 | 0.88 | 1.75 | 1.50 | 0.57 | 1.25 | 1.25 | 1.00 | 4.63 | 2.88 |
| 2.50 | 1.13 | 1.2500 | 3.50 | 1/2 | 10 | 1.09 | 1.75 | 1.50 | 0.57 | 1.50 | 1.50 | 1.31 | 4.75 | 3.00 |
| 3.25 | 1.63 | 1.5000 | 4.50 | 3/4 | 12 | 1.31 | 2.00 | 1.75 | 0.68 | 2.00 | 2.00 | 1.75 | 5.50 | 3.50 |
| 4.00 | 2.00 | 2.0000 | 5.00 | 3/4 | 12 | 1.75 | 2.00 | 1.75 | 0.68 | 2.25 | 2.25 | 2.13 | 5.75 | 3.75 |
| 5.00 | 2.25 | 2.5000 | 6.50 | 3/4 | 12 | 2.19 | 2.00 | 1.75 | 0.94 | 3.00 | 3.00 | 2.75 | 6.25 | 4.25 |
| 6.00 | 3.00 | 3.0000 | 7.50 | 1 | 16 | 2.63 | 2.25 | 2.25 | 1.05 | 3.50 | 3.50 | 3.13 | 7.38 | 4.88 |

[1] Diameter CD is hole diameter.
[2] Maximum operating pressure at 4:1 design factor is based on tensile strength of material. Pressure ratings are based on standard bearing ratings.

### Style SE – Dimensional and Mounting Data

| Bore Ø | Rod No. | MM Rod Ø | Thread Style 8 CC[3] | A | WF | Y | Add Stroke | | |
|---|---|---|---|---|---|---|---|---|---|
| | | | | | | | XC | XL | ZC |
| 1.50 | 1 (std.) | 0.625 | 1/2-20 | 0.75 | 1.00 | 2.00 | 6.88 | 9.01 | 7.88 |
| | 2 | 1.000 | [3] | [3] | 1.38 | 2.38 | 7.25 | 9.38 | 8.25 |
| 2.00 | 1 (std.) | 1.000 | 7/8-14 | 1.13 | 1.38 | 2.38 | 7.56 | 10.56 | 8.81 |
| | 2 | 1.375 | [3] | [3] | 1.63 | 2.63 | 7.81 | 10.81 | 9.06 |
| 2.50 | 1 (std.) | 1.000 | 7/8-14 | 1.13 | 1.38 | 2.38 | 7.75 | 10.75 | 9.25 |
| | 2 | 1.750 | [3] | [3] | 1.88 | 2.88 | 8.25 | 11.25 | 9.75 |
| | 3 | 1.375 | [3] | [3] | 1.63 | 2.63 | 8.00 | 11.00 | 9.50 |
| 3.25 | 1 (std.) | 1.375 | 1 1/4-12 | 1.63 | 1.63 | 2.75 | 9.25 | 13.38 | 11.25 |
| | 2 | 2.000 | [3] | [3] | 2.00 | 3.13 | 9.63 | 13.75 | 11.63 |
| | 3 | 1.750 | [3] | [3] | 1.88 | 3.00 | 9.50 | 13.63 | 11.50 |
| 4.00 | 1 (std.) | 1.750 | 1 1/2-12 | 2.00 | 1.88 | 3.00 | 10.13 | 15.13 | 12.38 |
| | 2 | 2.500 | [3] | [3] | 2.25 | 3.38 | 10.50 | 15.50 | 12.75 |
| | 3 | 2.000 | [3] | [3] | 2.00 | 3.13 | 10.25 | 15.25 | 12.50 |
| 5.00 | 1 (std.) | 2.000 | 1 3/4-12 | 2.25 | 2.00 | 3.13 | 11.50 | 17.25 | 14.50 |
| | 2 | 3.500 | [3] | [3] | 2.25 | 3.38 | 11.75 | 17.50 | 14.75 |
| | 3 | 2.500 | [3] | [3] | 2.25 | 3.38 | 11.75 | 17.50 | 14.75 |
| | 4 | 3.000 | [3] | [3] | 2.25 | 3.38 | 11.75 | 17.50 | 14.75 |
| 6.00 | 1 (std.) | 2.500 | 2 1/4-12 | 3.00 | 2.25 | 3.50 | 13.38 | 20.38 | 16.88 |
| | 2 | 4.000 | [3] | [3] | 2.25 | 3.50 | 13.38 | 20.38 | 16.88 |
| | 3 | 3.000 | [3] | [3] | 2.25 | 3.50 | 13.38 | 20.38 | 16.88 |
| | 4 | 3.500 | [3] | [3] | 2.25 | 3.50 | 13.38 | 20.38 | 16.88 |

### Style SE – Recommended maximum swivel angle on each side of the cylinder centerline.

| Bore Ø | Head End Mounted | | Cap End Mounted | |
|---|---|---|---|---|
| | Angle a | Tan. of a | Angle a | Tan. of a |
| 1.50 | 2.50° | 0.044 | 3.00° | 0.052 |
| 2.00 | 3.00° | 0.052 | 3.00° | 0.052 |
| 2.50 | 3.00° | 0.052 | 3.00° | 0.052 |
| 3.25 | 3.00° | 0.052 | 2.75° | 0.048 |
| 4.00 | 3.00° | 0.052 | 3.00° | 0.052 |
| 5.00 | 3.00° | 0.052 | 3.00° | 0.052 |
| 6.00 | 3.00° | 0.052 | 3.00° | 0.052 |

Note: Dimension X is the maximum off center mounting of the cylinder. To determine dimension X for various stroke lengths multiply the distance between pivot pin holes by tangent of angle a. For extended position use X = XL + 2X stroke.

### Mounting Information

Head End Mounting

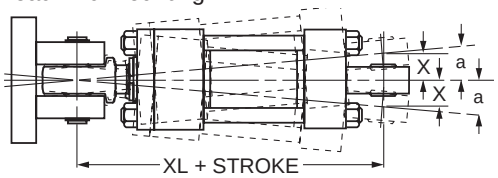


Cap End Mounting

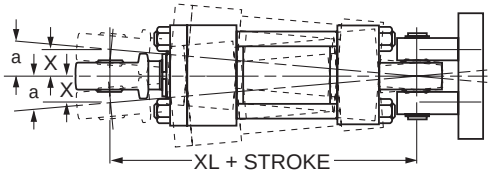


[3] To match pin diameter in rod eye and cap, when an oversize rod is required, specify rod end style '3', 'CC' thread and 'A' thread length for the standard rod diameter (Rod No. 1 for the bore), and 'WF' for the oversize rod. Order the rod eye and clevis bracket for the required bore size from the tables on the Style SE Spherical Bearing Accessories page.

View Table of Contents

## Double Rod Cylinder

Style K

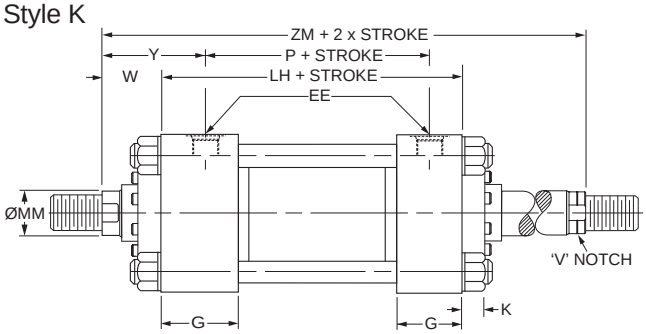


**Rod End #1** **Rod End #2**

## Double Rod End Mounting Styles

See Mounting Groups page in Section H for guidance on double rod end cylinder mounting style selection.

| Mounting Styles for Single Rod Models | Mounting Styles for Corresponding Double Rod Models[1] | | Dimensions Shown on This Page Supplement Dimensions on 1.50"-6.00" Bore Pages Listed Below |
|---|---|---|---|
| | Load Connected To Rod On Cylinder Mounting End | Load Connected To Rod Opposite Cylinder Mounting End | |
| T | KT | KT | 54 |
| TB | KTB | KTC | 54 |
| TD | KTD | KTD | 54 |
| J | KJ | KH | 55 |
| JB | KJB | KHB | 56 |
| JJ | KJJ | KHH | 57 |
| C | KC | KC | 61 |
| F | KF | KF | 62 |
| D | KD | KDB | 64 |
| DD | KDD[2] | KDD[2] | 66 |
| DE | KDE[2] | KDE[2] | 67 |

[1] Connect load to piston rod without 'V' notch. If only one end of the Double Rod Cylinder is to be cushioned, be sure to clearly specify which end this will be.

[2] Specify XI dimension for Styles DD & DE from #1 rod end (without 'V' notch).

## How to Use Double Rod Cylinder Dimension Drawings

To determine dimensions for a double rod cylinder, first refer to the desired single rod mounting style cylinder shown on preceding pages of this catalog. (See table above.) After selecting necessary dimensions from that drawing, return to this page supplement the single rod dimensions with those shown on drawing at right and dimension table below. Note that double rod cylinders have a head (Dim. G) at both ends and that dimension LH replaces LG. The double rod dimensions differ from, or are in addition to those for single rod cylinders shown on preceding pages and provide the information needed to completely dimension a double rod cylinder.

On a double rod cylinder where the two rod ends are different, be sure to clearly state which rod end is to be assembled at which end. Port position 1 is standard. If other than standard, specify pos. 2, 3 or 4 when viewed from rod end #1 only. See port position information in Section H.

| Bore Ø | Rod No. | MM Rod Ø | Add Stroke | | | Add 2X Stroke |
|---|---|---|---|---|---|---|
| | | | LH | SNK | SSK | ZM |
| 1.50 | 1 (std.) | 0.625 | 4.88 | 2.88 | 4.13 | 6.88 |
| | 2 | 1.000 | 4.88 | 2.88 | 4.13 | 7.63 |
| 2.00 | 1 (std.) | 1.000 | 4.88 | 2.88 | 3.88 | 7.63 |
| | 2 | 1.375 | 4.88 | 2.88 | 3.88 | 8.13 |
| 2.50 | 1 (std.) | 1.000 | 5.00 | 3.00 | 3.63 | 7.75 |
| | 2 | 1.750 | 5.00 | 3.00 | 3.63 | 8.75 |
| | 3 | 1.375 | 5.00 | 3.00 | 3.63 | 8.25 |
| 3.25 | 1 (std.) | 1.375 | 5.75 | 3.50 | 4.38 | 9.00 |
| | 2 | 2.000 | 5.75 | 3.50 | 4.38 | 9.75 |
| | 3 | 1.750 | 5.75 | 3.50 | 4.38 | 9.50 |
| 4.00 | 1 (std.) | 1.750 | 6.00 | 3.75 | 4.25 | 9.75 |
| | 2 | 2.500 | 6.00 | 3.75 | 4.25 | 10.50 |
| | 3 | 2.000 | 6.00 | 3.75 | 4.25 | 10.00 |
| 5.00 | 1 (std.) | 2.000 | 6.50 | 4.25 | 4.75 | 10.50 |
| | 2 | 3.500 | 6.50 | 4.25 | 4.75 | 11.00 |
| | 3 | 2.500 | 6.50 | 4.25 | 4.75 | 11.00 |
| | 4 | 3.000 | 6.50 | 4.25 | 4.75 | 11.00 |
| 6.00 | 1 (std.) | 2.500 | 7.38 | 4.88 | 5.13 | 11.88 |
| | 2 | 4.000 | 7.38 | 4.88 | 5.13 | 11.88 |
| | 3 | 3.000 | 7.38 | 4.88 | 5.13 | 11.88 |
| | 4 | 3.500 | 7.38 | 4.88 | 5.13 | 11.88 |
| **Replaces On single rod mounting styles:** | | | **LG** | **SN** | **SS** | **–** |
| | | | **All Mtg. Styles** | **F** | **C** | **All Mtg. Styles** |

## Series 2HD Rod Gland Retention[3]

B = Bolt -On Gland with Circular Retainer
R = Tie Rod Retained Gland

| Bore Ø | Rod No. | MM Rod Ø | Mounting Style | | | |
|---|---|---|---|---|---|---|
| | | | TC, H, HB, HH, C, F, D, DB, DD, DE, BB, SB, SE | TB, TD | J, JB | JJ |
| 1.50 | 1 (Std.) | 0.625 | B | R | R | B |
| | 2 | 1.000 | R | R | R | B |
| 2.00 | 1 (Std.) | 1.000 | B | R | R | B |
| | 2 | 1.375 | R | R | R | B |
| 2.50 | 1 (Std.) | 1.000 | B | B | B | B |
| | 2 | 1.750 | B | B | R | B |
| | 3 | 1.375 | B | B | B | B |
| 3.25 | All | All | B | B | B | B |
| 4.00 | All | All | B | B | B | B |
| 5.00 | 1 (Std.) | 2.000 | B | B | B | B |
| | 2 | 3.500 | B | B | R | B |
| | 3 | 2.500 | B | B | B | B |
| | 4 | 3.000 | B | B | B | B |
| 6.00 | All | All | B | B | B | B |

[3] Gland retention style may vary when thrust key retainer or gland drain option is included. Contact factory for details.

View Table of Contents

## Rod End Dimensions

**Thread Style 4 (NFPA Style SM)**
**Small Male**

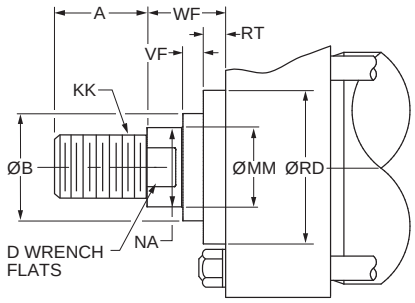


**Thread Style 8 (NFPA Style IM)**
**Intermediate Male**

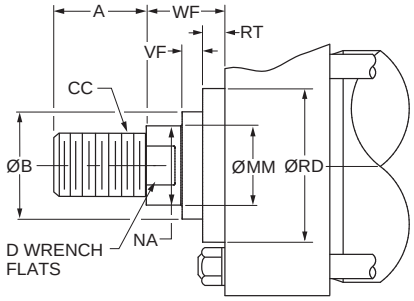


**Thread Style 9[2] (NFPA Style SF)**
**Small Female**

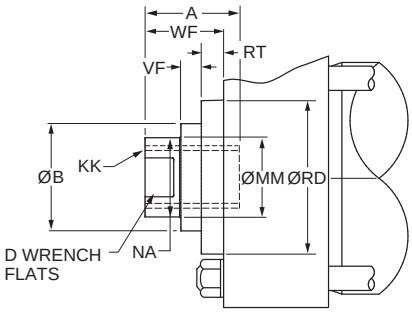


**Thread Style 55[1]**

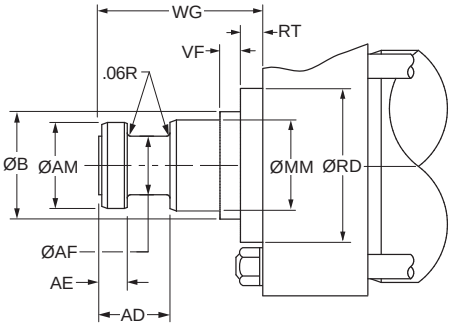


## Rod End Dimensions

| Bore Ø | Rod No. | MM Rod Ø | Thread | | Rod Extensions and Pilot Dimensions | | | | | | | |
|---|---|---|---|---|---|---|---|---|---|---|---|---|
| | | | Style 8 CC | Style 4 & 9 KK | A | B Ø +.000 -.002 | D | NA | VF | RD Ø | RT | WF |
| 7.00 | 1 (std.) | 3.000 | 2 3/4-12 | 2 1/4-12 | 3.50 | 3.749 | 2.63 | 2.88 | 0.40 | 5.26 | 0.85 | 2.25 |
| | 2 | 5.000 | 4 3/4-12 | 3 1/2-12 | 5.00 | 5.749 | -[3] | 4.88 | 0.34 | 7.25 | 0.91 | 2.25 |
| | 3 | 3.500 | 3 1/4-12 | 2 1/2-12 | 3.50 | 4.249 | 3.00 | 3.38 | 0.34 | 5.76 | 0.91 | 2.25 |
| | 4 | 4.000 | 3 3/4-12 | 3-12 | 4.00 | 4.749 | 3.38 | 3.88 | 0.34 | 6.31 | 0.91 | 2.25 |
| | 5 | 4.500 | 4 1/4-12 | 3 1/4-12 | 4.50 | 5.249 | -[3] | 4.38 | 0.34 | 6.94 | 0.91 | 2.25 |
| 8.00 | 1 (std.) | 3.500 | 3 1/4-12 | 2 1/2-12 | 3.50 | 4.249 | 3.00 | 3.38 | 0.34 | 5.76 | 0.91 | 2.25 |
| | 2 | 5.500 | 5 1/4-12 | 4-12 | 5.50 | 6.249 | -[3] | 5.38 | 0.34 | 7.94 | 0.91 | 2.25 |
| | 3 | 4.000 | 3 3/4-12 | 3-12 | 4.00 | 4.749 | 3.38 | 3.88 | 0.34 | 6.31 | 0.91 | 2.25 |
| | 4 | 4.500 | 4 1/4-12 | 3 1/4-12 | 4.50 | 5.249 | -[3] | 4.38 | 0.34 | 6.94 | 0.91 | 2.25 |
| | 5 | 5.000 | 4 3/4-12 | 3 1/2-12 | 5.00 | 5.749 | -[3] | 4.88 | 0.34 | 7.25 | 0.91 | 2.25 |

### "Special" Thread Style 3

Special thread, extension, rod eye, blank, etc., are also available.

To order, specify "Style 3" and give desired dimensions for KK, A, W or WF. If otherwise special, furnish dimensioned sketch.

[1] For special WG dimension, specify "Style 3" and give desired dimension for WG. For other changes, place "S" in the model code, and describe rod end with dimensioned sketch.

[2] Style 9 stroke restrictions may apply. See Style 9 Minimum Stroke Table on How to Order page for details.

[3] These piston rod numbers will have 4 spanner wrench holes instead of wrench flats. See rod drawings on 3H Large Bore Piston Rod Ends page for dimensions.

### Style 55 Rod End

| MM Rod Ø | AD | AE +.001 -.001 | AF Ø | AM Ø | WG[1] |
|---|---|---|---|---|---|
| 3.000 | 2.44 | 0.874 | 2.25 | 2.95 | 4.88 |
| 3.500 | 2.69 | 0.999 | 2.50 | 3.45 | 5.63 |
| 4.000 | 2.69 | 0.999 | 3.00 | 3.95 | 5.75 |
| 4.500 | 3.19 | 1.499 | 3.50 | 4.45 | 6.50 |
| 5.000 | 3.19 | 1.499 | 3.88 | 4.95 | 6.63 |
| 5.500 | 3.94 | 1.874 | 4.38 | 5.45 | 7.50 |

View Table of Contents



## Tie Rods Extended Both Ends

Style TD
(NFPA Style MX1)

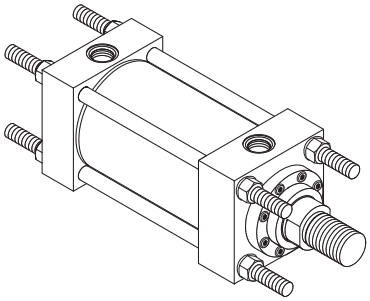

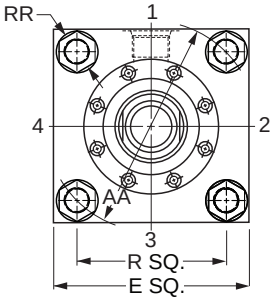


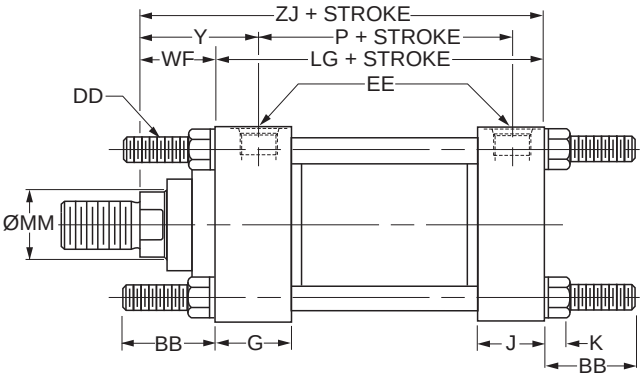


Basic Mounting (T) — NFPA MXO — Not shown is no tie rod extended and can be supplied upon request.

### Style TD – Dimensional and Mounting Data

| Bore Ø | Rod No. | MM Rod Ø | AA | BB | DD | E | EE | | G | J | K Max. | R | RR | WF | Y | Add Stroke | | |
|---|---|---|---|---|---|---|---|---|---|---|---|---|---|---|---|---|---|---|
| | | | | | | | NPTF[1] | SAE[2] | | | | | | | | LG | P | ZJ |
| 7.00 | 1 (std.) | 3.000 | 9.31 | 4.13 | 1 1/8-12 | 8.50 | 1 1/4 | 20 | 2.75 | 2.75 | 1.16 | 6.58 | 2.00 | 2.25 | 3.69 | 8.50 | 5.63 | 10.75 |
| | 2 | 5.000 | 9.31 | 4.13 | 1 1/8-12 | 8.50 | 1 1/4 | 20 | 2.75 | 2.75 | 1.16 | 6.58 | 2.00 | 2.25 | 3.69 | 8.50 | 5.63 | 10.75 |
| | 3 | 3.500 | 9.31 | 4.13 | 1 1/8-12 | 8.50 | 1 1/4 | 20 | 2.75 | 2.75 | 1.16 | 6.58 | 2.00 | 2.25 | 3.69 | 8.50 | 5.63 | 10.75 |
| | 4 | 4.000 | 9.31 | 4.13 | 1 1/8-12 | 8.50 | 1 1/4 | 20 | 2.75 | 2.75 | 1.16 | 6.58 | 2.00 | 2.25 | 3.69 | 8.50 | 5.63 | 10.75 |
| | 5 | 4.500 | 9.31 | 4.13 | 1 1/8-12 | 8.50 | 1 1/4 | 20 | 2.75 | 2.75 | 1.16 | 6.58 | 2.00 | 2.25 | 3.69 | 8.50 | 5.63 | 10.75 |
| 8.00 | 1 (std.) | 3.500 | 10.61 | 4.50 | 1 1/4-12 | 9.50 | 1 1/2 | 24 | 3.00 | 3.00 | 1.28 | 7.50 | 2.19 | 2.25 | 3.81 | 9.50 | 6.38 | 11.75 |
| | 2 | 5.500 | 10.61 | 4.50 | 1 1/4-12 | 9.50 | 1 1/2 | 24 | 3.00 | 3.00 | 1.28 | 7.50 | 2.19 | 2.25 | 3.81 | 9.50 | 6.38 | 11.75 |
| | 3 | 4.000 | 10.61 | 4.50 | 1 1/4-12 | 9.50 | 1 1/2 | 24 | 3.00 | 3.00 | 1.28 | 7.50 | 2.19 | 2.25 | 3.81 | 9.50 | 6.38 | 11.75 |
| | 4 | 4.500 | 10.61 | 4.50 | 1 1/4-12 | 9.50 | 1 1/2 | 24 | 3.00 | 3.00 | 1.28 | 7.50 | 2.19 | 2.25 | 3.81 | 9.50 | 6.38 | 11.75 |
| | 5 | 5.000 | 10.61 | 4.50 | 1 1/4-12 | 9.50 | 1 1/2 | 24 | 3.00 | 3.00 | 1.28 | 7.50 | 2.19 | 2.25 | 3.81 | 9.50 | 6.38 | 11.75 |

[1]NPTF ports are available at no extra charge.
[2]SAE straight thread ports are standard and are indicated by port number.

### Style TB

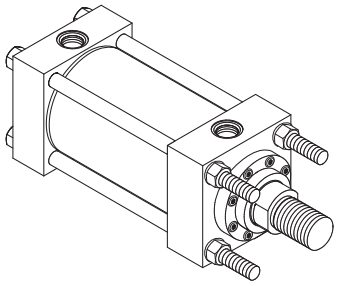

### Style TC

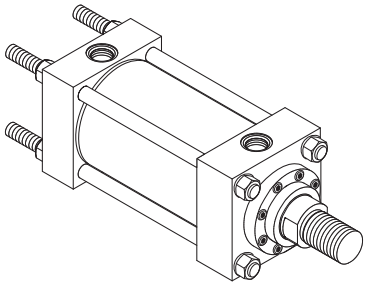

Dimensions for TB and TC Mount may be obtained from the above dimensional table.

View Table of Contents

## Head Rectangular Flange Mounting

Style J
(NFPA Style MF1)

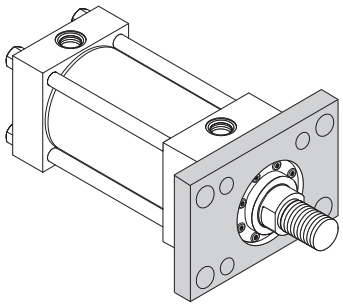

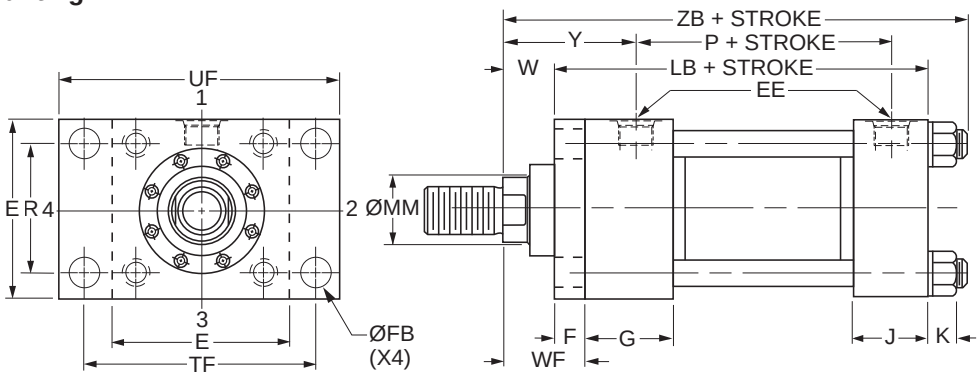


## Style J – Dimensional and Mounting Data

For pressures exceeding those shown use mounting styles JB or JJ.

| Bore Ø | Rod No. | MM Rod Ø | E | EE | | F | FB Ø | G | J | K Max. | R | TF | UF | W | WF | Y | Add Stroke | | |
|---|---|---|---|---|---|---|---|---|---|---|---|---|---|---|---|---|---|---|---|
| | | | | NPTF[1] | SAE[2] | | | | | | | | | | | | LB | P | ZB Max. |
| 7.00 | 1 (std.) | 3.000 | 8.50 | 1 1/4 | 20 | 1.00 | 1.19 | 2.75 | 2.75 | 1.16 | 6.58 | 10.63 | 12.63 | 1.25 | 2.25 | 3.69 | 9.50 | 5.63 | 12.16 |
| | 2 | 5.000 | 8.50 | 1 1/4 | 20 | 1.00 | 1.19 | 2.75 | 2.75 | 1.16 | 6.58 | 10.63 | 12.63 | 1.25 | 2.25 | 3.69 | 9.50 | 5.63 | 12.16 |
| | 3 | 3.500 | 8.50 | 1 1/4 | 20 | 1.00 | 1.19 | 2.75 | 2.75 | 1.16 | 6.58 | 10.63 | 12.63 | 1.25 | 2.25 | 3.69 | 9.50 | 5.63 | 12.16 |
| | 4 | 4.000 | 8.50 | 1 1/4 | 20 | 1.00 | 1.19 | 2.75 | 2.75 | 1.16 | 6.58 | 10.63 | 12.63 | 1.25 | 2.25 | 3.69 | 9.50 | 5.63 | 12.16 |
| | 5 | 4.500 | 8.50 | 1 1/4 | 20 | 1.00 | 1.19 | 2.75 | 2.75 | 1.16 | 6.58 | 10.63 | 12.63 | 1.25 | 2.25 | 3.69 | 9.50 | 5.63 | 12.16 |
| 8.00 | 1 (std.) | 3.500 | 9.50 | 1 1/2 | 24 | 1.00 | 1.31 | 3.00 | 3.00 | 1.28 | 7.50 | 11.81 | 14.00 | 1.25 | 2.25 | 3.81 | 10.50 | 6.38 | 13.28 |
| | 2 | 5.500 | 9.50 | 1 1/2 | 24 | 1.00 | 1.31 | 3.00 | 3.00 | 1.28 | 7.50 | 11.81 | 14.00 | 1.25 | 2.25 | 3.81 | 10.50 | 6.38 | 13.28 |
| | 3 | 4.000 | 9.50 | 1 1/2 | 24 | 1.00 | 1.31 | 3.00 | 3.00 | 1.28 | 7.50 | 11.81 | 14.00 | 1.25 | 2.25 | 3.81 | 10.50 | 6.38 | 13.28 |
| | 4 | 4.500 | 9.50 | 1 1/2 | 24 | 1.00 | 1.31 | 3.00 | 3.00 | 1.28 | 7.50 | 11.81 | 14.00 | 1.25 | 2.25 | 3.81 | 10.50 | 6.38 | 13.28 |
| | 5 | 5.000 | 9.50 | 1 1/2 | 24 | 1.00 | 1.31 | 3.00 | 3.00 | 1.28 | 7.50 | 11.81 | 14.00 | 1.25 | 2.25 | 3.81 | 10.50 | 6.38 | 13.28 |

[1]NPTF ports are available at no extra charge.
[2]SAE straight thread ports are standard and are indicated by port number.

## Style J – Maximum Operating Pressure / 3HD

| Bore Ø | Max. psi Push[3] | | | | |
|---|---|---|---|---|---|
| | Rod Code | | | | |
| | 1 | 2 | 3 | 4 | 5 |
| 7.00 | 1000 | 400 | 800 | 400 | 400 |
| 8.00 | 800 | 400 | 700 | 400 | 400 |

[3]Maximum pressure rating – push application.

View Table of Contents



## Head Square Flange Mounting

Style JB
(NFPA Style MF5)

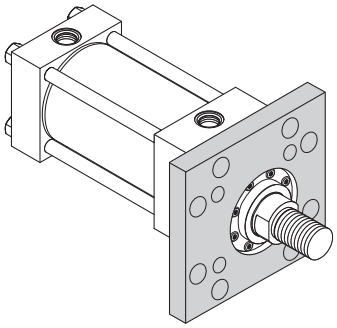

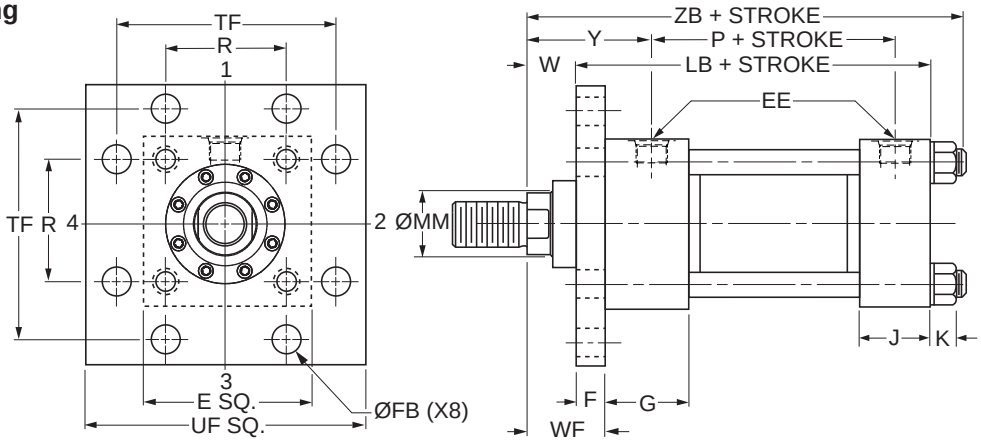


### Style JB – Dimensional and Mounting Data

| Bore Ø | Rod No. | MM Rod Ø | E | EE | | F | FB Ø | G | J | K Max. | R | TF | UF | W | WF | Y | Add Stroke | | |
|---|---|---|---|---|---|---|---|---|---|---|---|---|---|---|---|---|---|---|---|
| | | | | NPTF[1] | SAE[2] | | | | | | | | | | | | LB | P | ZB Max. |
| 7.00 | 1 (std.) | 3.000 | 8.50 | 1 1/4 | 20 | 1.00 | 1.19 | 2.75 | 2.75 | 1.16 | 6.58 | 10.63 | 12.63 | 1.25 | 2.25 | 3.69 | 9.50 | 5.63 | 12.16 |
| | 2 | 5.000 | 8.50 | 1 1/4 | 20 | 1.00 | 1.19 | 2.75 | 2.75 | 1.16 | 6.58 | 10.63 | 12.63 | 1.25 | 2.25 | 3.69 | 9.50 | 5.63 | 12.16 |
| | 3 | 3.500 | 8.50 | 1 1/4 | 20 | 1.00 | 1.19 | 2.75 | 2.75 | 1.16 | 6.58 | 10.63 | 12.63 | 1.25 | 2.25 | 3.69 | 9.50 | 5.63 | 12.16 |
| | 4 | 4.000 | 8.50 | 1 1/4 | 20 | 1.00 | 1.19 | 2.75 | 2.75 | 1.16 | 6.58 | 10.63 | 12.63 | 1.25 | 2.25 | 3.69 | 9.50 | 5.63 | 12.16 |
| | 5 | 4.500 | 8.50 | 1 1/4 | 20 | 1.00 | 1.19 | 2.75 | 2.75 | 1.16 | 6.58 | 10.63 | 12.63 | 1.25 | 2.25 | 3.69 | 9.50 | 5.63 | 12.16 |
| 8.00 | 1 (std.) | 3.500 | 9.50 | 1 1/2 | 24 | 1.00 | 1.31 | 3.00 | 3.00 | 1.28 | 7.50 | 11.81 | 14.00 | 1.25 | 2.25 | 3.81 | 10.50 | 6.38 | 13.28 |
| | 2 | 5.500 | 9.50 | 1 1/2 | 24 | 1.00 | 1.31 | 3.00 | 3.00 | 1.28 | 7.50 | 11.81 | 14.00 | 1.25 | 2.25 | 3.81 | 10.50 | 6.38 | 13.28 |
| | 3 | 4.000 | 9.50 | 1 1/2 | 24 | 1.00 | 1.31 | 3.00 | 3.00 | 1.28 | 7.50 | 11.81 | 14.00 | 1.25 | 2.25 | 3.81 | 10.50 | 6.38 | 13.28 |
| | 4 | 4.500 | 9.50 | 1 1/2 | 24 | 1.00 | 1.31 | 3.00 | 3.00 | 1.28 | 7.50 | 11.81 | 14.00 | 1.25 | 2.25 | 3.81 | 10.50 | 6.38 | 13.28 |
| | 5 | 5.000 | 9.50 | 1 1/2 | 24 | 1.00 | 1.31 | 3.00 | 3.00 | 1.28 | 7.50 | 11.81 | 14.00 | 1.25 | 2.25 | 3.81 | 10.50 | 6.38 | 13.28 |

[1]NPTF ports are available at no extra charge.
[2]SAE straight thread ports are standard and are indicated by port number.

### Style JB – Maximum Operating Pressure / 3HD

| Bore Ø | Max. psi Push[3] | | | | |
|---|---|---|---|---|---|
| | Rod Code | | | | |
| | 1 | 2 | 3 | 4 | 5 |
| 7.00 | 2500 | 1500 | 2200 | 1500 | 1500 |
| 8.00 | 2000 | 1400 | 2000 | 1400 | 1400 |

[3]Maximum pressure rating – push application.

View Table of Contents

## Head Rectangular Mounting

Style JJ
(NFPA Style ME5)

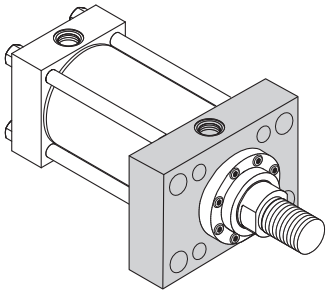

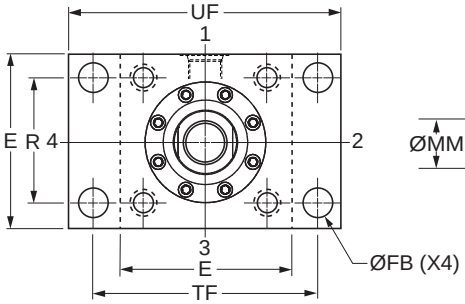


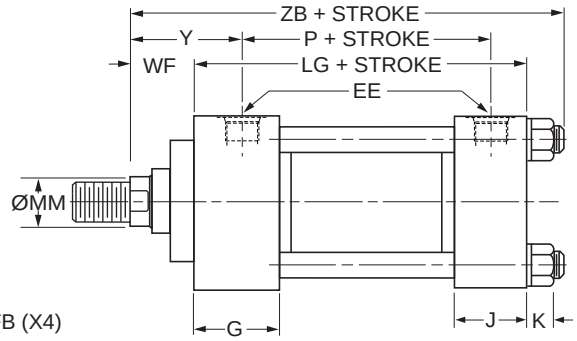


### Style JJ – Dimensional and Mounting Data

| Bore Ø | Rod No. | MM Rod Ø | E | EE | | FB Ø | G | J | K Max. | R | TF | UF | WF | Y | Add Stroke | | |
|---|---|---|---|---|---|---|---|---|---|---|---|---|---|---|---|---|---|
| | | | | NPTF[1] | SAE[2] | | | | | | | | | | LG | P | ZB Max. |
| 7.00 | 1 (std.) | 3.000 | 8.50 | 1 1/4 | 20 | 1.19 | 2.75 | 2.75 | 1.16 | 6.58 | 10.63 | 12.63 | 2.25 | 3.69 | 8.50 | 5.63 | 12.16 |
| | 2 | 5.000 | 8.50 | 1 1/4 | 20 | 1.19 | 2.75 | 2.75 | 1.16 | 6.58 | 10.63 | 12.63 | 2.25 | 3.69 | 8.50 | 5.63 | 12.16 |
| | 3 | 3.500 | 8.50 | 1 1/4 | 20 | 1.19 | 2.75 | 2.75 | 1.16 | 6.58 | 10.63 | 12.63 | 2.25 | 3.69 | 8.50 | 5.63 | 12.16 |
| | 4 | 4.000 | 8.50 | 1 1/4 | 20 | 1.19 | 2.75 | 2.75 | 1.16 | 6.58 | 10.63 | 12.63 | 2.25 | 3.69 | 8.50 | 5.63 | 12.16 |
| | 5 | 4.500 | 8.50 | 1 1/4 | 20 | 1.19 | 2.75 | 2.75 | 1.16 | 6.58 | 10.63 | 12.63 | 2.25 | 3.69 | 8.50 | 5.63 | 12.16 |
| 8.00 | 1 (std.) | 3.500 | 9.50 | 1 1/2 | 24 | 1.31 | 3.00 | 3.00 | 1.28 | 7.50 | 11.81 | 14.00 | 2.25 | 3.81 | 9.50 | 6.38 | 13.28 |
| | 2 | 5.500 | 9.50 | 1 1/2 | 24 | 1.31 | 3.00 | 3.00 | 1.28 | 7.50 | 11.81 | 14.00 | 2.25 | 3.81 | 9.50 | 6.38 | 13.28 |
| | 3 | 4.000 | 9.50 | 1 1/2 | 24 | 1.31 | 3.00 | 3.00 | 1.28 | 7.50 | 11.81 | 14.00 | 2.25 | 3.81 | 9.50 | 6.38 | 13.28 |
| | 4 | 4.500 | 9.50 | 1 1/2 | 24 | 1.31 | 3.00 | 3.00 | 1.28 | 7.50 | 11.81 | 14.00 | 2.25 | 3.81 | 9.50 | 6.38 | 13.28 |
| | 5 | 5.000 | 9.50 | 1 1/2 | 24 | 1.31 | 3.00 | 3.00 | 1.28 | 7.50 | 11.81 | 14.00 | 2.25 | 3.81 | 9.50 | 6.38 | 13.28 |

[1]NPTF ports are available at no extra charge.
[2]SAE straight thread ports are standard and are indicated by port number.

View Table of Contents

## Cap Rectangular Flange Mounting
Style H
(NFPA Style MF2)

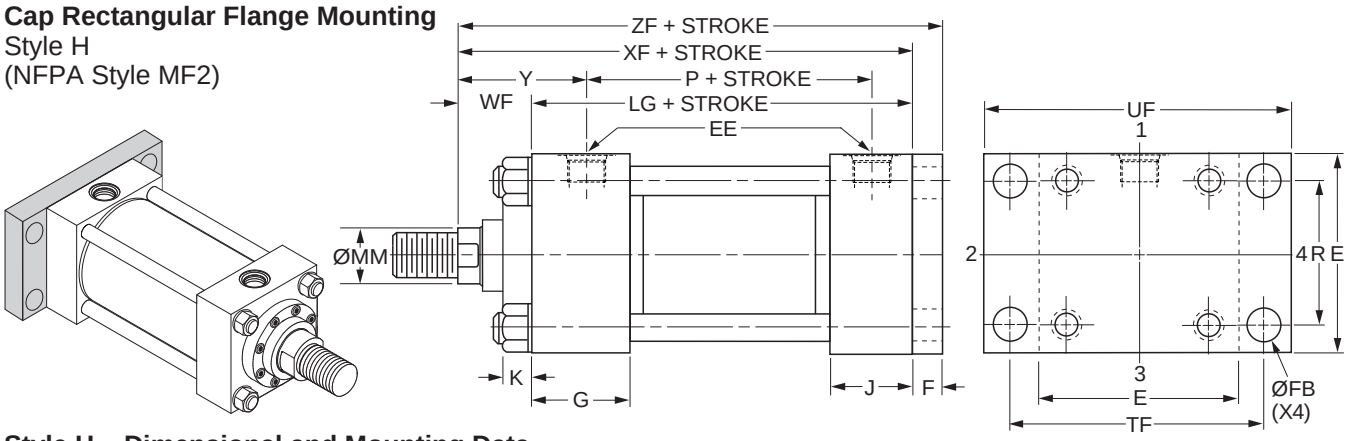


### Style H – Dimensional and Mounting Data

| Bore Ø | Rod No. | MM Rod Ø | E | EE | | F | FB Ø | G | J | K Max. | R | TF | UF | WF | Y | Add Stroke | | | |
|---|---|---|---|---|---|---|---|---|---|---|---|---|---|---|---|---|---|---|---|
| | | | | NPTF[1] | SAE[2] | | | | | | | | | | | LG | P | XF | ZF |
| 7.00 | 1 (std.) | 3.000 | 8.50 | 1 1/4 | 20 | 1.00 | 1.19 | 2.75 | 2.75 | 1.16 | 6.58 | 10.63 | 12.63 | 2.25 | 3.69 | 8.50 | 5.63 | 10.75 | 11.75 |
| | 2 | 5.000 | 8.50 | 1 1/4 | 20 | 1.00 | 1.19 | 2.75 | 2.75 | 1.16 | 6.58 | 10.63 | 12.63 | 2.25 | 3.69 | 8.50 | 5.63 | 10.75 | 11.75 |
| | 3 | 3.500 | 8.50 | 1 1/4 | 20 | 1.00 | 1.19 | 2.75 | 2.75 | 1.16 | 6.58 | 10.63 | 12.63 | 2.25 | 3.69 | 8.50 | 5.63 | 10.75 | 11.75 |
| | 4 | 4.000 | 8.50 | 1 1/4 | 20 | 1.00 | 1.19 | 2.75 | 2.75 | 1.16 | 6.58 | 10.63 | 12.63 | 2.25 | 3.69 | 8.50 | 5.63 | 10.75 | 11.75 |
| | 5 | 4.500 | 8.50 | 1 1/4 | 20 | 1.00 | 1.19 | 2.75 | 2.75 | 1.16 | 6.58 | 10.63 | 12.63 | 2.25 | 3.69 | 8.50 | 5.63 | 10.75 | 11.75 |
| 8.00 | 1 (std.) | 3.500 | 9.50 | 1 1/2 | 24 | 1.00 | 1.31 | 3.00 | 3.00 | 1.28 | 7.50 | 11.81 | 14.00 | 2.25 | 3.81 | 9.50 | 6.38 | 11.75 | 12.75 |
| | 2 | 5.500 | 9.50 | 1 1/2 | 24 | 1.00 | 1.31 | 3.00 | 3.00 | 1.28 | 7.50 | 11.81 | 14.00 | 2.25 | 3.81 | 9.50 | 6.38 | 11.75 | 12.75 |
| | 3 | 4.000 | 9.50 | 1 1/2 | 24 | 1.00 | 1.31 | 3.00 | 3.00 | 1.28 | 7.50 | 11.81 | 14.00 | 2.25 | 3.81 | 9.50 | 6.38 | 11.75 | 12.75 |
| | 4 | 4.500 | 9.50 | 1 1/2 | 24 | 1.00 | 1.31 | 3.00 | 3.00 | 1.28 | 7.50 | 11.81 | 14.00 | 2.25 | 3.81 | 9.50 | 6.38 | 11.75 | 12.75 |
| | 5 | 5.000 | 9.50 | 1 1/2 | 24 | 1.00 | 1.31 | 3.00 | 3.00 | 1.28 | 7.50 | 11.81 | 14.00 | 2.25 | 3.81 | 9.50 | 6.38 | 11.75 | 12.75 |

[1]NPTF ports are available at no extra charge.
[2]SAE straight thread ports are standard and are indicated by port number.

### Style H – Maximum Operating Pressure / 3HD

| Bore Ø | Max. psi Pull[3] | | | | |
|---|---|---|---|---|---|
| | Rod Code | | | | |
| | 1 | 2 | 3 | 4 | 5 |
| 7.00 | 2000 | 3000 | 2000 | 2500 | 2800 |
| 8.00 | 1700 | 2500 | 1700 | 1800 | 2200 |

[3]Maximum pressure rating – pull application.

View Table of Contents

## Cap Square Flange Mounting
Style HB
(NFPA Style MF6)

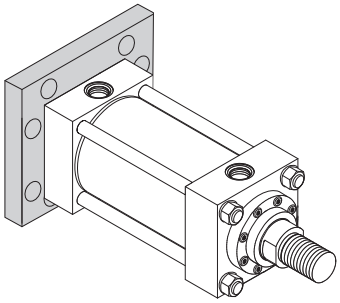

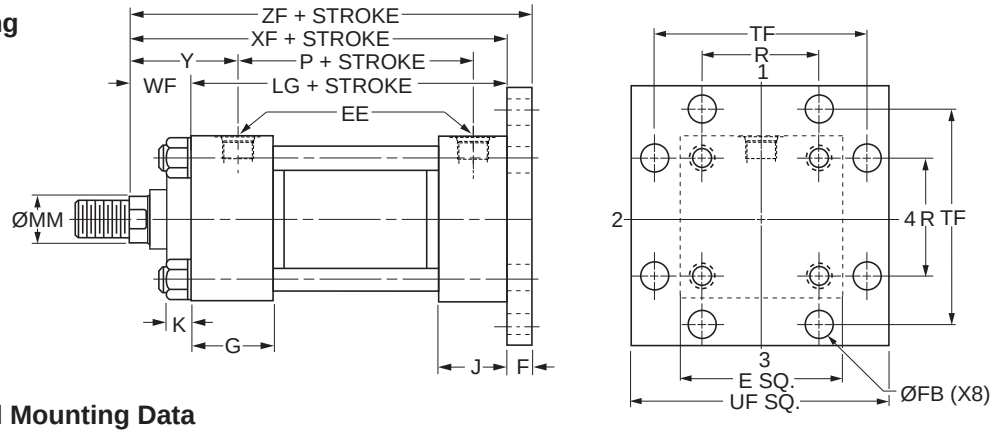


### Style HB – Dimensional and Mounting Data

| Bore Ø | Rod No. | MM Rod Ø | E | EE NPTF[1] | EE SAE[2] | F | FB Ø | G | J | K Max. | R | TF | UF | WF | Y | Add Stroke LG | Add Stroke P | Add Stroke XF | Add Stroke ZF |
|---|---|---|---|---|---|---|---|---|---|---|---|---|---|---|---|---|---|---|---|
| 7.00 | 1 (std.) | 3.000 | 8.50 | 1 1/4 | 20 | 1.00 | 1.19 | 2.75 | 2.75 | 1.16 | 6.58 | 10.63 | 12.63 | 2.25 | 3.69 | 8.50 | 5.63 | 10.75 | 11.75 |
| | 2 | 5.000 | 8.50 | 1 1/4 | 20 | 1.00 | 1.19 | 2.75 | 2.75 | 1.16 | 6.58 | 10.63 | 12.63 | 2.25 | 3.69 | 8.50 | 5.63 | 10.75 | 11.75 |
| | 3 | 3.500 | 8.50 | 1 1/4 | 20 | 1.00 | 1.19 | 2.75 | 2.75 | 1.16 | 6.58 | 10.63 | 12.63 | 2.25 | 3.69 | 8.50 | 5.63 | 10.75 | 11.75 |
| | 4 | 4.000 | 8.50 | 1 1/4 | 20 | 1.00 | 1.19 | 2.75 | 2.75 | 1.16 | 6.58 | 10.63 | 12.63 | 2.25 | 3.69 | 8.50 | 5.63 | 10.75 | 11.75 |
| | 5 | 4.500 | 8.50 | 1 1/4 | 20 | 1.00 | 1.19 | 2.75 | 2.75 | 1.16 | 6.58 | 10.63 | 12.63 | 2.25 | 3.69 | 8.50 | 5.63 | 10.75 | 11.75 |
| 8.00 | 1 (std.) | 3.500 | 9.50 | 1 1/2 | 24 | 1.00 | 1.31 | 3.00 | 3.00 | 1.28 | 7.50 | 11.81 | 14.00 | 2.25 | 3.81 | 9.50 | 6.38 | 11.75 | 12.75 |
| | 2 | 5.500 | 9.50 | 1 1/2 | 24 | 1.00 | 1.31 | 3.00 | 3.00 | 1.28 | 7.50 | 11.81 | 14.00 | 2.25 | 3.81 | 9.50 | 6.38 | 11.75 | 12.75 |
| | 3 | 4.000 | 9.50 | 1 1/2 | 24 | 1.00 | 1.31 | 3.00 | 3.00 | 1.28 | 7.50 | 11.81 | 14.00 | 2.25 | 3.81 | 9.50 | 6.38 | 11.75 | 12.75 |
| | 4 | 4.500 | 9.50 | 1 1/2 | 24 | 1.00 | 1.31 | 3.00 | 3.00 | 1.28 | 7.50 | 11.81 | 14.00 | 2.25 | 3.81 | 9.50 | 6.38 | 11.75 | 12.75 |
| | 5 | 5.000 | 9.50 | 1 1/2 | 24 | 1.00 | 1.31 | 3.00 | 3.00 | 1.28 | 7.50 | 11.81 | 14.00 | 2.25 | 3.81 | 9.50 | 6.38 | 11.75 | 12.75 |

[1]NPTF ports are available at no extra charge.
[2]SAE straight thread ports are standard and are indicated by port number.

## Cap Rectangular Mounting
Style HH
(NFPA Style ME6)

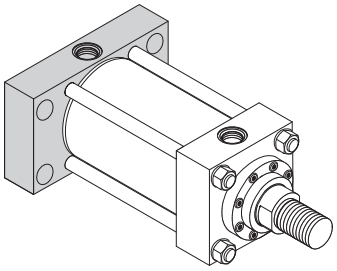

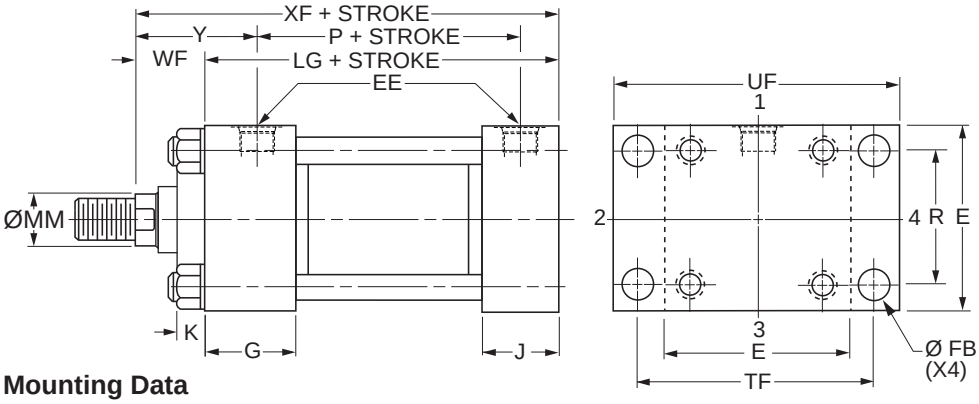


### Style HH – Dimensional and Mounting Data

| Bore Ø | Rod No | MM Rod Ø | E | EE NPTF[1] | EE SAE[2] | FB Ø | G | J | K Max. | R | TF | UF | WF | Y | Add Stroke LG | Add Stroke P | Add Stroke XF |
|---|---|---|---|---|---|---|---|---|---|---|---|---|---|---|---|---|---|
| 7.00 | 1 (std.) | 3.000 | 8.50 | 1 1/4 | 20 | 1.19 | 2.75 | 2.75 | 1.16 | 6.58 | 10.63 | 12.63 | 2.25 | 3.69 | 8.50 | 5.63 | 10.75 |
| | 2 | 5.000 | 8.50 | 1 1/4 | 20 | 1.19 | 2.75 | 2.75 | 1.16 | 6.58 | 10.63 | 12.63 | 2.25 | 3.69 | 8.50 | 5.63 | 10.75 |
| | 3 | 3.500 | 8.50 | 1 1/4 | 20 | 1.19 | 2.75 | 2.75 | 1.16 | 6.58 | 10.63 | 12.63 | 2.25 | 3.69 | 8.50 | 5.63 | 10.75 |
| | 4 | 4.000 | 8.50 | 1 1/4 | 20 | 1.19 | 2.75 | 2.75 | 1.16 | 6.58 | 10.63 | 12.63 | 2.25 | 3.69 | 8.50 | 5.63 | 10.75 |
| | 5 | 4.500 | 8.50 | 1 1/4 | 20 | 1.19 | 2.75 | 2.75 | 1.16 | 6.58 | 10.63 | 12.63 | 2.25 | 3.69 | 8.50 | 5.63 | 10.75 |
| 8.00 | 1 (std.) | 3.500 | 9.50 | 1 1/2 | 24 | 1.31 | 3.00 | 3.00 | 1.28 | 7.50 | 11.81 | 14.00 | 2.25 | 3.81 | 9.50 | 6.38 | 11.75 |
| | 2 | 5.500 | 9.50 | 1 1/2 | 24 | 1.31 | 3.00 | 3.00 | 1.28 | 7.50 | 11.81 | 14.00 | 2.25 | 3.81 | 9.50 | 6.38 | 11.75 |
| | 3 | 4.000 | 9.50 | 1 1/2 | 24 | 1.31 | 3.00 | 3.00 | 1.28 | 7.50 | 11.81 | 14.00 | 2.25 | 3.81 | 9.50 | 6.38 | 11.75 |
| | 4 | 4.500 | 9.50 | 1 1/2 | 24 | 1.31 | 3.00 | 3.00 | 1.28 | 7.50 | 11.81 | 14.00 | 2.25 | 3.81 | 9.50 | 6.38 | 11.75 |
| | 5 | 5.000 | 9.50 | 1 1/2 | 24 | 1.31 | 3.00 | 3.00 | 1.28 | 7.50 | 11.81 | 14.00 | 2.25 | 3.81 | 9.50 | 6.38 | 11.75 |

[1]NPTF ports are available at no extra charge.
[2]SAE straight thread ports are standard and are indicated by port number.

View Table of Contents

## Side Lug Mounting
Style C
(NFPA Style MS2)

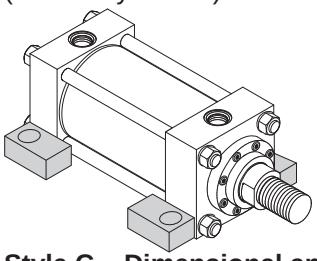

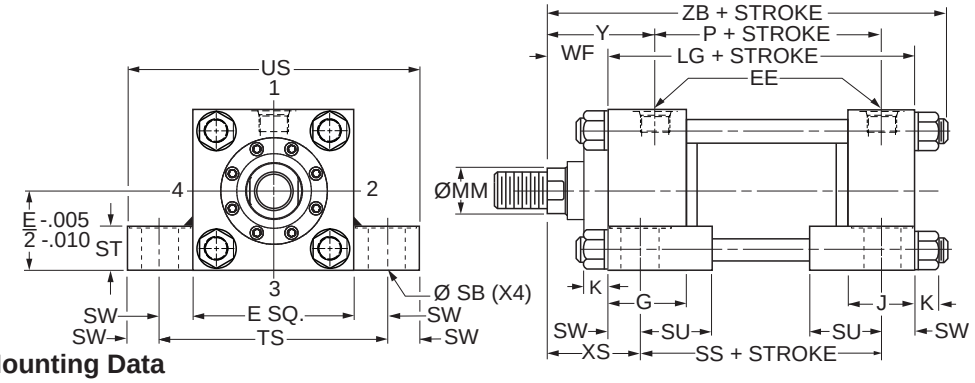


### Style C – Dimensional and Mounting Data

| Bore Ø | Rod No. | MM Rod Ø | E | EE NPTF[1] | EE SAE[2] | G | J | K Max. | SB Ø | ST | SU | SW | TS | US | WF | XS | Y | Add Stroke LG | Add Stroke P | Add Stroke SS | Add Stroke ZB Max. |
|---|---|---|---|---|---|---|---|---|---|---|---|---|---|---|---|---|---|---|---|---|---|
| 7.00 | 1 (std.) | 3.000 | 8.50 | 1 1/4 | 20 | 2.75 | 2.75 | 1.16 | 1.56 | 1.75 | 2.88 | 1.38 | 11.25 | 14.00 | 2.25 | 3.63 | 3.69 | 8.50 | 5.63 | 5.75 | 12.16 |
| | 2 | 5.000 | 8.50 | 1 1/4 | 20 | 2.75 | 2.75 | 1.16 | 1.56 | 1.75 | 2.88 | 1.38 | 11.25 | 14.00 | 2.25 | 3.63 | 3.69 | 8.50 | 5.63 | 5.75 | 12.16 |
| | 3 | 3.500 | 8.50 | 1 1/4 | 20 | 2.75 | 2.75 | 1.16 | 1.56 | 1.75 | 2.88 | 1.38 | 11.25 | 14.00 | 2.25 | 3.63 | 3.69 | 8.50 | 5.63 | 5.75 | 12.16 |
| | 4 | 4.000 | 8.50 | 1 1/4 | 20 | 2.75 | 2.75 | 1.16 | 1.56 | 1.75 | 2.88 | 1.38 | 11.25 | 14.00 | 2.25 | 3.63 | 3.69 | 8.50 | 5.63 | 5.75 | 12.16 |
| | 5 | 4.500 | 8.50 | 1 1/4 | 20 | 2.75 | 2.75 | 1.16 | 1.56 | 1.75 | 2.88 | 1.38 | 11.25 | 14.00 | 2.25 | 3.63 | 3.69 | 8.50 | 5.63 | 5.75 | 12.16 |
| 8.00 | 1 (std.) | 3.500 | 9.50 | 1 1/2 | 24 | 3.00 | 3.00 | 1.28 | 1.56 | 1.75 | 2.88 | 1.38 | 12.25 | 15.00 | 2.25 | 3.63 | 3.81 | 9.50 | 6.38 | 6.75 | 13.28 |
| | 2 | 5.500 | 9.50 | 1 1/2 | 24 | 3.00 | 3.00 | 1.28 | 1.56 | 1.75 | 2.88 | 1.38 | 12.25 | 15.00 | 2.25 | 3.63 | 3.81 | 9.50 | 6.38 | 6.75 | 13.28 |
| | 3 | 4.000 | 9.50 | 1 1/2 | 24 | 3.00 | 3.00 | 1.28 | 1.56 | 1.75 | 2.88 | 1.38 | 12.25 | 15.00 | 2.25 | 3.63 | 3.81 | 9.50 | 6.38 | 6.75 | 13.28 |
| | 4 | 4.500 | 9.50 | 1 1/2 | 24 | 3.00 | 3.00 | 1.28 | 1.56 | 1.75 | 2.88 | 1.38 | 12.25 | 15.00 | 2.25 | 3.63 | 3.81 | 9.50 | 6.38 | 6.75 | 13.28 |
| | 5 | 5.000 | 9.50 | 1 1/2 | 24 | 3.00 | 3.00 | 1.28 | 1.56 | 1.75 | 2.88 | 1.38 | 12.25 | 15.00 | 2.25 | 3.63 | 3.81 | 9.50 | 6.38 | 6.75 | 13.28 |

[1]NPTF ports are available at no extra charge.
[2]SAE straight thread ports are standard and are indicated by port number.

## Side Tapped Mounting
Style F
(NFPA Style MS4)

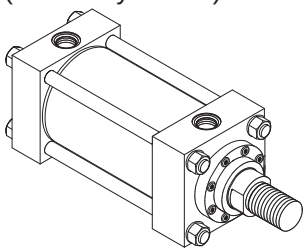

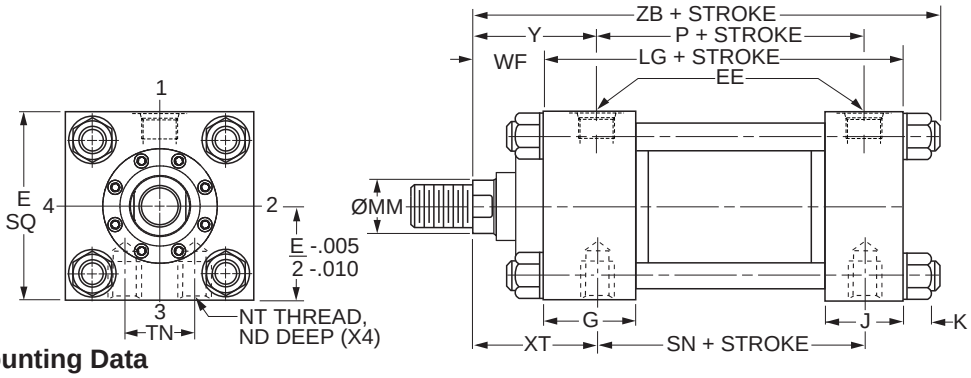


### Style F – Dimensional and Mounting Data

| Bore Ø | Rod No. | MM Rod Ø | E | EE NPTF[1] | EE SAE[2] | G | J | K Max. | ND | NT | TN | WF | XT | Y | Add Stroke LG | Add Stroke P | Add Stroke SN | Add Stroke ZB Max. |
|---|---|---|---|---|---|---|---|---|---|---|---|---|---|---|---|---|---|---|
| 7.00 | 1 (std.) | 3.000 | 8.50 | 1 1/4 | 20 | 2.75 | 2.75 | 1.16 | 1.13 | 1 1/2-6 | 3.75 | 2.25 | 3.81 | 3.69 | 8.50 | 5.63 | 5.88 | 12.16 |
| | 2 | 5.000 | 8.50 | 1 1/4 | 20 | 2.75 | 2.75 | 1.16 | 1.13 | 1 1/2-6 | 3.75 | 2.25 | 3.81 | 3.69 | 8.50 | 5.63 | 5.88 | 12.16 |
| | 3 | 3.500 | 8.50 | 1 1/4 | 20 | 2.75 | 2.75 | 1.16 | 1.13 | 1 1/2-6 | 3.75 | 2.25 | 3.81 | 3.69 | 8.50 | 5.63 | 5.88 | 12.16 |
| | 4 | 4.000 | 8.50 | 1 1/4 | 20 | 2.75 | 2.75 | 1.16 | 1.13 | 1 1/2-6 | 3.75 | 2.25 | 3.81 | 3.69 | 8.50 | 5.63 | 5.88 | 12.16 |
| | 5 | 4.500 | 8.50 | 1 1/4 | 20 | 2.75 | 2.75 | 1.16 | 1.13 | 1 1/2-6 | 3.75 | 2.25 | 3.81 | 3.69 | 8.50 | 5.63 | 5.88 | 12.16 |
| 8.00 | 1 (std.) | 3.500 | 9.50 | 1 1/2 | 24 | 3.00 | 3.00 | 1.28 | 1.50 | 1 1/2-6 | 4.25 | 2.25 | 3.94 | 3.81 | 9.50 | 6.38 | 6.63 | 13.28 |
| | 2 | 5.500 | 9.50 | 1 1/2 | 24 | 3.00 | 3.00 | 1.28 | 1.50 | 1 1/2-6 | 4.25 | 2.25 | 3.94 | 3.81 | 9.50 | 6.38 | 6.63 | 13.28 |
| | 3 | 4.000 | 9.50 | 1 1/2 | 24 | 3.00 | 3.00 | 1.28 | 1.50 | 1 1/2-6 | 4.25 | 2.25 | 3.94 | 3.81 | 9.50 | 6.38 | 6.63 | 13.28 |
| | 4 | 4.500 | 9.50 | 1 1/2 | 24 | 3.00 | 3.00 | 1.28 | 1.50 | 1 1/2-6 | 4.25 | 2.25 | 3.94 | 3.81 | 9.50 | 6.38 | 6.63 | 13.28 |
| | 5 | 5.000 | 9.50 | 1 1/2 | 24 | 3.00 | 3.00 | 1.28 | 1.50 | 1 1/2-6 | 4.25 | 2.25 | 3.94 | 3.81 | 9.50 | 6.38 | 6.63 | 13.28 |

[1]NPTF ports are available at no extra charge.
[2]SAE straight thread ports are standard and are indicated by port number.

View Table of Contents

## Cap Fixed Clevis Mounting
Style BB
(NFPA Style MP1)

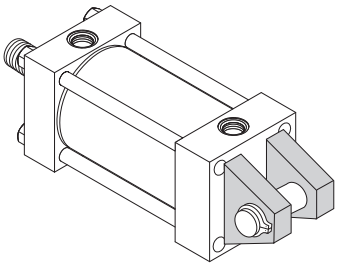

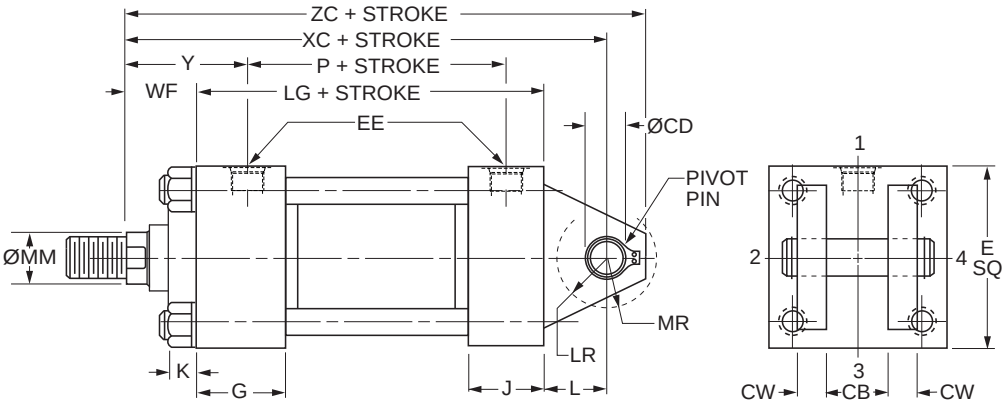


### Style BB – Dimensional and Mounting Data

| Bore Ø | Rod No. | MM Rod Ø | CB | CD[3] Ø +.000 -.002 | CW | E | EE NPTF[1] | EE SAE[2] | G | J | K Max. | L | LR | MR |
|---|---|---|---|---|---|---|---|---|---|---|---|---|---|---|
| 7.00 | 1 (std.) | 3.000 | 3.00 | 2.501 | 1.50 | 8.50 | 1 1/4 | 20 | 2.75 | 2.75 | 1.16 | 3.00 | 2.75 | 2.88 |
| | 2 | 5.000 | 3.00 | 2.501 | 1.50 | 8.50 | 1 1/4 | 20 | 2.75 | 2.75 | 1.16 | 3.00 | 2.75 | 2.88 |
| | 3 | 3.500 | 3.00 | 2.501 | 1.50 | 8.50 | 1 1/4 | 20 | 2.75 | 2.75 | 1.16 | 3.00 | 2.75 | 2.88 |
| | 4 | 4.000 | 3.00 | 2.501 | 1.50 | 8.50 | 1 1/4 | 20 | 2.75 | 2.75 | 1.16 | 3.00 | 2.75 | 2.88 |
| | 5 | 4.500 | 3.00 | 2.501 | 1.50 | 8.50 | 1 1/4 | 20 | 2.75 | 2.75 | 1.16 | 3.00 | 2.75 | 2.88 |
| 8.00 | 1 (std.) | 3.500 | 3.00 | 3.001 | 1.50 | 9.50 | 1 1/2 | 24 | 3.00 | 3.00 | 1.28 | 3.25 | 3.25 | 3.13 |
| | 2 | 5.500 | 3.00 | 3.001 | 1.50 | 9.50 | 1 1/2 | 24 | 3.00 | 3.00 | 1.28 | 3.25 | 3.25 | 3.13 |
| | 3 | 4.000 | 3.00 | 3.001 | 1.50 | 9.50 | 1 1/2 | 24 | 3.00 | 3.00 | 1.28 | 3.25 | 3.25 | 3.13 |
| | 4 | 4.500 | 3.00 | 3.001 | 1.50 | 9.50 | 1 1/2 | 24 | 3.00 | 3.00 | 1.28 | 3.25 | 3.25 | 3.13 |
| | 5 | 5.000 | 3.00 | 3.001 | 1.50 | 9.50 | 1 1/2 | 24 | 3.00 | 3.00 | 1.28 | 3.25 | 3.25 | 3.13 |

[1]NPTF ports are available at no extra charge.
[2]SAE straight thread ports are standard and are indicated by port number.
[3]Diameter CD is pin diameter.

### Style BB – Dimensional and Mounting Data

| Bore Ø | Rod No. | MM Rod Ø | WF | Y | Add Stroke LG | Add Stroke P | Add Stroke XC | Add Stroke ZC |
|---|---|---|---|---|---|---|---|---|
| 7.00 | 1 (std.) | 3.000 | 2.25 | 3.69 | 8.50 | 5.63 | 13.75 | 16.25 |
| | 2 | 5.000 | 2.25 | 3.69 | 8.50 | 5.63 | 13.75 | 16.25 |
| | 3 | 3.500 | 2.25 | 3.69 | 8.50 | 5.63 | 13.75 | 16.25 |
| | 4 | 4.000 | 2.25 | 3.69 | 8.50 | 5.63 | 13.75 | 16.25 |
| | 5 | 4.500 | 2.25 | 3.69 | 8.50 | 5.63 | 13.75 | 16.25 |
| 8.00 | 1 (std.) | 3.500 | 2.25 | 3.81 | 9.50 | 6.38 | 15.00 | 17.75 |
| | 2 | 5.500 | 2.25 | 3.81 | 9.50 | 6.38 | 15.00 | 17.75 |
| | 3 | 4.000 | 2.25 | 3.81 | 9.50 | 6.38 | 15.00 | 17.75 |
| | 4 | 4.500 | 2.25 | 3.81 | 9.50 | 6.38 | 15.00 | 17.75 |
| | 5 | 5.000 | 2.25 | 3.81 | 9.50 | 6.38 | 15.00 | 17.75 |

View Table of Contents



## Head Trunnion Mounting
Style D
(NFPA Style MT1)

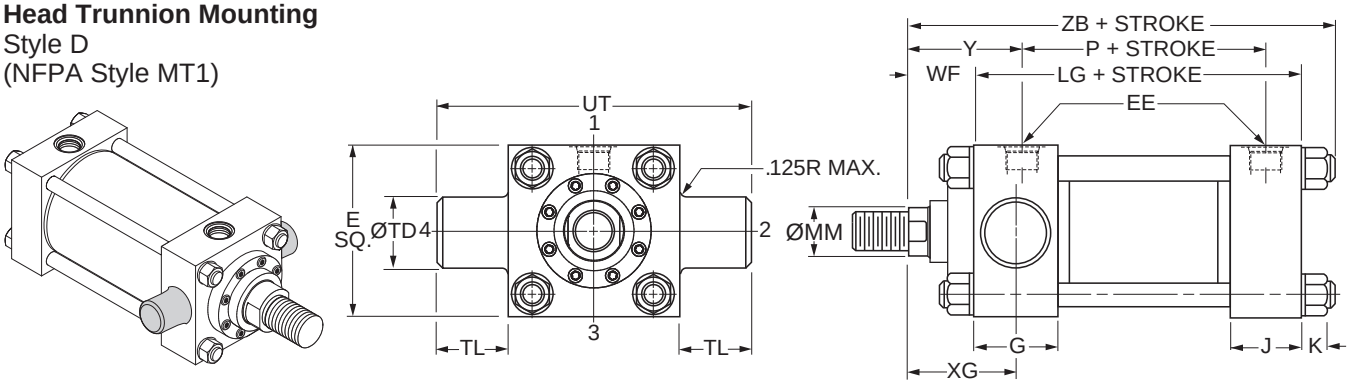


### Style D – Dimensional and Mounting Data

| Bore Ø | Rod No. | MM Rod Ø | E | EE | | G | J | K Max. | TD Ø +.000 -.002 | TL | UT | WF | Y | XG |
|---|---|---|---|---|---|---|---|---|---|---|---|---|---|---|
| | | | | NPTF[1] | SAE[2] | | | | | | | | | |
| 7.00 | 1 (std.) | 3.000 | 8.50 | 1 1/4 | 20 | 2.75 | 2.75 | 1.16 | 2.500 | 2.50 | 13.50 | 2.25 | 3.69 | 3.63 |
| | 2 | 5.000 | 8.50 | 1 1/4 | 20 | 2.75 | 2.75 | 1.16 | 2.500 | 2.50 | 13.50 | 2.25 | 3.69 | 3.63 |
| | 3 | 3.500 | 8.50 | 1 1/4 | 20 | 2.75 | 2.75 | 1.16 | 2.500 | 2.50 | 13.50 | 2.25 | 3.69 | 3.63 |
| | 4 | 4.000 | 8.50 | 1 1/4 | 20 | 2.75 | 2.75 | 1.16 | 2.500 | 2.50 | 13.50 | 2.25 | 3.69 | 3.63 |
| | 5 | 4.500 | 8.50 | 1 1/4 | 20 | 2.75 | 2.75 | 1.16 | 2.500 | 2.50 | 13.50 | 2.25 | 3.69 | 3.63 |
| 8.00 | 1 (std.) | 3.500 | 9.50 | 1 1/2 | 24 | 3.00 | 3.00 | 1.28 | 3.000 | 3.00 | 15.50 | 2.25 | 3.81 | 3.75 |
| | 2 | 5.500 | 9.50 | 1 1/2 | 24 | 3.00 | 3.00 | 1.28 | 3.000 | 3.00 | 15.50 | 2.25 | 3.81 | 3.75 |
| | 3 | 4.000 | 9.50 | 1 1/2 | 24 | 3.00 | 3.00 | 1.28 | 3.000 | 3.00 | 15.50 | 2.25 | 3.81 | 3.75 |
| | 4 | 4.500 | 9.50 | 1 1/2 | 24 | 3.00 | 3.00 | 1.28 | 3.000 | 3.00 | 15.50 | 2.25 | 3.81 | 3.75 |
| | 5 | 5.000 | 9.50 | 1 1/2 | 24 | 3.00 | 3.00 | 1.28 | 3.000 | 3.00 | 15.50 | 2.25 | 3.81 | 3.75 |

[1]NPTF ports are available at no extra charge.
[2]SAE straight thread ports are standard and are indicated by port number.

### Style D – Dimensional and Mounting Data

| Bore Ø | Rod No. | MM Rod Ø | Add Stroke | | |
|---|---|---|---|---|---|
| | | | LG | P | ZB Max. |
| 7.00 | 1 (std.) | 3.000 | 8.50 | 5.63 | 12.16 |
| | 2 | 5.000 | 8.50 | 5.63 | 12.16 |
| | 3 | 3.500 | 8.50 | 5.63 | 12.16 |
| | 4 | 4.000 | 8.50 | 5.63 | 12.16 |
| | 5 | 4.500 | 8.50 | 5.63 | 12.16 |
| 8.00 | 1 (std.) | 3.500 | 9.50 | 6.38 | 13.28 |
| | 2 | 5.500 | 9.50 | 6.38 | 13.28 |
| | 3 | 4.000 | 9.50 | 6.38 | 13.28 |
| | 4 | 4.500 | 9.50 | 6.38 | 13.28 |
| | 5 | 5.000 | 9.50 | 6.38 | 13.28 |

View Table of Contents

## Cap Trunnion Mounting
Style DB
(NFPA Style MT2)

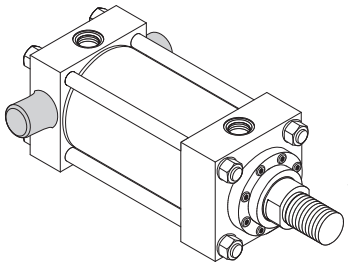

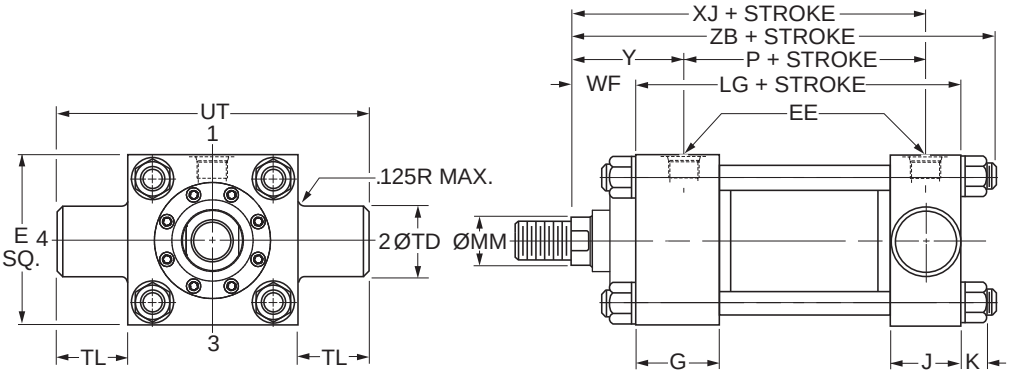


### Style DB – Dimensional and Mounting Data

| Bore Ø | Rod No. | MM Rod Ø | E | EE | | G | J | K Max. | TD Ø +.000 -.002 | TL | UT | WF | Y |
|---|---|---|---|---|---|---|---|---|---|---|---|---|---|
| | | | | NPTF[1] | SAE[2] | | | | | | | | |
| 7.00 | 1 (std.) | 3.000 | 8.50 | 1 1/4 | 20 | 2.75 | 2.75 | 1.16 | 2.500 | 2.50 | 13.50 | 2.25 | 3.69 |
| | 2 | 5.000 | 8.50 | 1 1/4 | 20 | 2.75 | 2.75 | 1.16 | 2.500 | 2.50 | 13.50 | 2.25 | 3.69 |
| | 3 | 3.500 | 8.50 | 1 1/4 | 20 | 2.75 | 2.75 | 1.16 | 2.500 | 2.50 | 13.50 | 2.25 | 3.69 |
| | 4 | 4.000 | 8.50 | 1 1/4 | 20 | 2.75 | 2.75 | 1.16 | 2.500 | 2.50 | 13.50 | 2.25 | 3.69 |
| | 5 | 4.500 | 8.50 | 1 1/4 | 20 | 2.75 | 2.75 | 1.16 | 2.500 | 2.50 | 13.50 | 2.25 | 3.69 |
| 8.00 | 1 (std.) | 3.500 | 9.50 | 1 1/2 | 24 | 3.00 | 3.00 | 1.28 | 3.000 | 3.00 | 15.50 | 2.25 | 3.81 |
| | 2 | 5.500 | 9.50 | 1 1/2 | 24 | 3.00 | 3.00 | 1.28 | 3.000 | 3.00 | 15.50 | 2.25 | 3.81 |
| | 3 | 4.000 | 9.50 | 1 1/2 | 24 | 3.00 | 3.00 | 1.28 | 3.000 | 3.00 | 15.50 | 2.25 | 3.81 |
| | 4 | 4.500 | 9.50 | 1 1/2 | 24 | 3.00 | 3.00 | 1.28 | 3.000 | 3.00 | 15.50 | 2.25 | 3.81 |
| | 5 | 5.000 | 9.50 | 1 1/2 | 24 | 3.00 | 3.00 | 1.28 | 3.000 | 3.00 | 15.50 | 2.25 | 3.81 |

[1]NPTF ports are available at no extra charge.
[2]SAE straight thread ports are standard and are indicated by port number.

### Style DB – Dimensional and Mounting Data

| Bore Ø | Rod No. | MM Rod Ø | Add Stroke | | | |
|---|---|---|---|---|---|---|
| | | | LG | P | XJ | ZB Max |
| 7.00 | 1 (std.) | 3.000 | 8.50 | 5.63 | 9.38 | 12.16 |
| | 2 | 5.000 | 8.50 | 5.63 | 9.38 | 12.16 |
| | 3 | 3.500 | 8.50 | 5.63 | 9.38 | 12.16 |
| | 4 | 4.000 | 8.50 | 5.63 | 9.38 | 12.16 |
| | 5 | 4.500 | 8.50 | 5.63 | 9.38 | 12.16 |
| 8.00 | 1 (std.) | 3.500 | 9.50 | 6.38 | 10.25 | 13.28 |
| | 2 | 5.500 | 9.50 | 6.38 | 10.25 | 13.28 |
| | 3 | 4.000 | 9.50 | 6.38 | 10.25 | 13.28 |
| | 4 | 4.500 | 9.50 | 6.38 | 10.25 | 13.28 |
| | 5 | 5.000 | 9.50 | 6.38 | 10.25 | 13.28 |

View Table of Contents



## Intermediate Fixed Trunnion Mounting

Style DD
(NFPA Former Standard Style MT4)

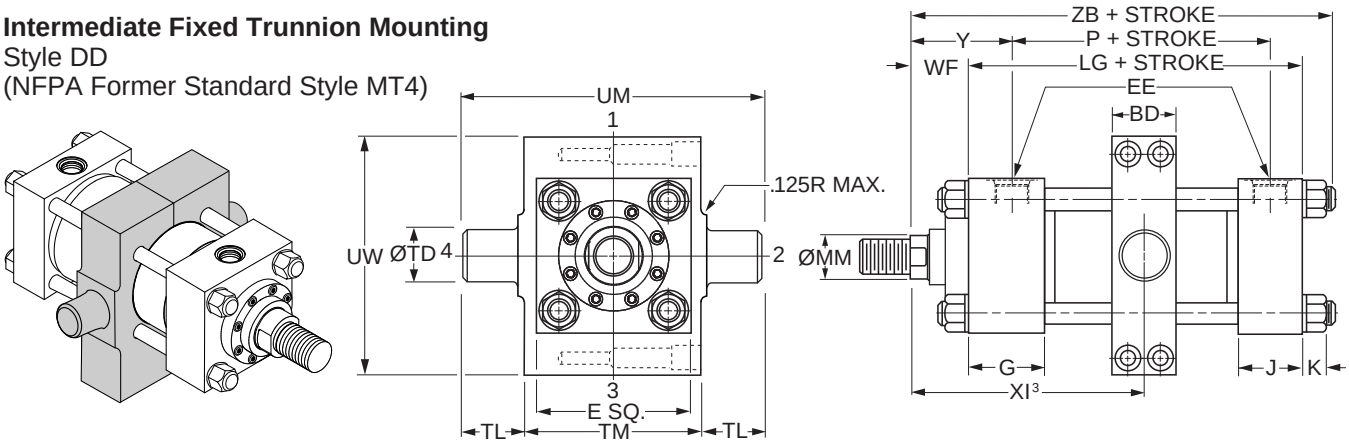


### Style DD – Dimensional and Mounting Data

| Bore Ø | Rod No. | MM Rod Ø | BD | E | EE NPTF[1] | EE SAE[2] | G | J | K Max. | TD Ø +.000 -.002 | TL | TM | UM | UW | WF | Y |
|---|---|---|---|---|---|---|---|---|---|---|---|---|---|---|---|---|
| 7.00 | 1 (std.) | 3.000 | 3.00 | 8.50 | 1 1/4 | 20 | 2.75 | 2.75 | 1.16 | 2.500 | 2.50 | 9.75 | 14.75 | 11.50 | 2.25 | 3.69 |
| | 2 | 5.000 | 3.00 | 8.50 | 1 1/4 | 20 | 2.75 | 2.75 | 1.16 | 2.500 | 2.50 | 9.75 | 14.75 | 11.50 | 2.25 | 3.69 |
| | 3 | 3.500 | 3.00 | 8.50 | 1 1/4 | 20 | 2.75 | 2.75 | 1.16 | 2.500 | 2.50 | 9.75 | 14.75 | 11.50 | 2.25 | 3.69 |
| | 4 | 4.000 | 3.00 | 8.50 | 1 1/4 | 20 | 2.75 | 2.75 | 1.16 | 2.500 | 2.50 | 9.75 | 14.75 | 11.50 | 2.25 | 3.69 |
| | 5 | 4.500 | 3.00 | 8.50 | 1 1/4 | 20 | 2.75 | 2.75 | 1.16 | 2.500 | 2.50 | 9.75 | 14.75 | 11.50 | 2.25 | 3.69 |
| 8.00 | 1 (std.) | 3.500 | 3.50 | 9.50 | 1 1/2 | 24 | 3.00 | 3.00 | 1.28 | 3.000 | 3.00 | 11.00 | 17.00 | 13.38 | 2.25 | 3.81 |
| | 2 | 5.500 | 3.50 | 9.50 | 1 1/2 | 24 | 3.00 | 3.00 | 1.28 | 3.000 | 3.00 | 11.00 | 17.00 | 13.38 | 2.25 | 3.81 |
| | 3 | 4.000 | 3.50 | 9.50 | 1 1/2 | 24 | 3.00 | 3.00 | 1.28 | 3.000 | 3.00 | 11.00 | 17.00 | 13.38 | 2.25 | 3.81 |
| | 4 | 4.500 | 3.50 | 9.50 | 1 1/2 | 24 | 3.00 | 3.00 | 1.28 | 3.000 | 3.00 | 11.00 | 17.00 | 13.38 | 2.25 | 3.81 |
| | 5 | 5.000 | 3.50 | 9.50 | 1 1/2 | 24 | 3.00 | 3.00 | 1.28 | 3.000 | 3.00 | 11.00 | 17.00 | 13.38 | 2.25 | 3.81 |

[1]NPTF ports are available at no extra charge.
[2]SAE straight thread ports are standard and are indicated by port number.

### Style DD – Dimensional and Mounting Data

| Bore Ø | Rod No. | MM Rod Ø | Minimum XI[3] Styles 4, 8 & 9 | Minimum XI[3] Style 55 | Style DD Minimum Stroke | Add Stroke LG | Add Stroke P | Add Stroke Maximum XI[4] Styles 4, 8 & 9 | Add Stroke Maximum XI[4] Style 55 | Add Stroke ZB Max. |
|---|---|---|---|---|---|---|---|---|---|---|
| 7.00 | 1 (std.) | 3.000 | 6.56 | 9.19 | 0.13 | 8.50 | 5.63 | 6.44 | 9.06 | 12.16 |
| | 2 | 5.000 | 6.56 | 10.94 | 0.13 | 8.50 | 5.63 | 6.44 | 10.81 | 12.16 |
| | 3 | 3.500 | 6.56 | 9.94 | 0.13 | 8.50 | 5.63 | 6.44 | 9.81 | 12.16 |
| | 4 | 4.000 | 6.56 | 10.06 | 0.13 | 8.50 | 5.63 | 6.44 | 9.94 | 12.16 |
| | 5 | 4.500 | 6.56 | 10.81 | 0.13 | 8.50 | 5.63 | 6.44 | 10.69 | 12.16 |
| 8.00 | 1 (std.) | 3.500 | 7.06 | 10.44 | 0.13 | 9.50 | 6.38 | 6.94 | 10.31 | 13.28 |
| | 2 | 5.500 | 7.06 | 12.31 | 0.13 | 9.50 | 6.38 | 6.94 | 12.19 | 13.28 |
| | 3 | 4.000 | 7.06 | 10.56 | 0.13 | 9.50 | 6.38 | 6.94 | 10.44 | 13.28 |
| | 4 | 4.500 | 7.06 | 11.31 | 0.13 | 9.50 | 6.38 | 6.94 | 11.19 | 13.28 |
| | 5 | 5.000 | 7.06 | 11.44 | 0.13 | 9.50 | 6.38 | 6.94 | 11.31 | 13.28 |

[3]Dimension XI to be specified by customer. Reference point for rod end Style 55 is end of piston rod.
[4]Dimensions shown are valid for standard WF and WG dimension.

View Table of Contents

## Heavy Duty Intermediate Fixed Trunnion Mounting

Style DE
(NFPA Current Standard Style MT4)

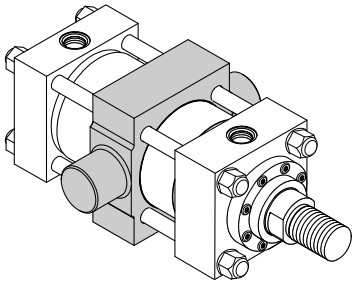

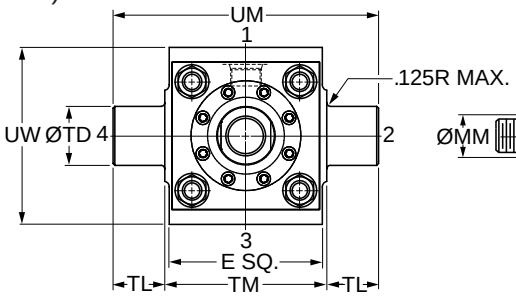


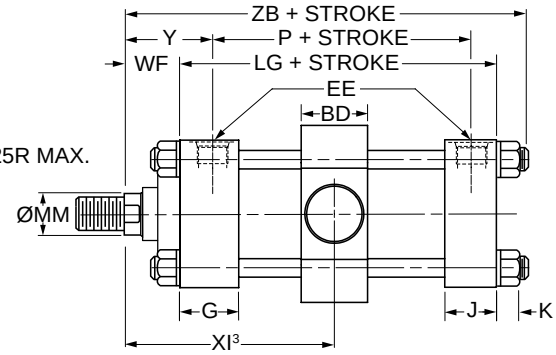


### Style DE – Dimensional and Mounting Data

| Bore Ø | Rod No. | MM Rod Ø | BD | E | EE NPTF[1] | EE SAE[2] | G | J | K Max. | TD Ø +.000 -.002 | TL | TM | UM | UW | WF | Y |
|---|---|---|---|---|---|---|---|---|---|---|---|---|---|---|---|---|
| 7.00 | 1 (std.) | 3.000 | 4.000 | 8.50 | 1 1/4 | 20 | 2.75 | 2.75 | 1.16 | 3.500 | 2.50 | 9.75 | 14.75 | 11.38 | 2.25 | 3.69 |
| | 2 | 5.000 | 4.000 | 8.50 | 1 1/4 | 20 | 2.75 | 2.75 | 1.16 | 3.500 | 2.50 | 9.75 | 14.75 | 11.38 | 2.25 | 3.69 |
| | 3 | 3.500 | 4.000 | 8.50 | 1 1/4 | 20 | 2.75 | 2.75 | 1.16 | 3.500 | 2.50 | 9.75 | 14.75 | 11.38 | 2.25 | 3.69 |
| | 4 | 4.000 | 4.000 | 8.50 | 1 1/4 | 20 | 2.75 | 2.75 | 1.16 | 3.500 | 2.50 | 9.75 | 14.75 | 11.38 | 2.25 | 3.69 |
| | 5 | 4.500 | 4.000 | 8.50 | 1 1/4 | 20 | 2.75 | 2.75 | 1.16 | 3.500 | 2.50 | 9.75 | 14.75 | 11.38 | 2.25 | 3.69 |
| 8.00 | 1 (std.) | 3.500 | 4.500 | 9.50 | 1 1/2 | 24 | 3.00 | 3.00 | 1.28 | 4.000 | 3.00 | 11.00 | 17.00 | 12.00 | 2.25 | 3.81 |
| | 2 | 5.500 | 4.500 | 9.50 | 1 1/2 | 24 | 3.00 | 3.00 | 1.28 | 4.000 | 3.00 | 11.00 | 17.00 | 12.00 | 2.25 | 3.81 |
| | 3 | 4.000 | 4.500 | 9.50 | 1 1/2 | 24 | 3.00 | 3.00 | 1.28 | 4.000 | 3.00 | 11.00 | 17.00 | 12.00 | 2.25 | 3.81 |
| | 4 | 4.500 | 4.500 | 9.50 | 1 1/2 | 24 | 3.00 | 3.00 | 1.28 | 4.000 | 3.00 | 11.00 | 17.00 | 12.00 | 2.25 | 3.81 |
| | 5 | 5.000 | 4.500 | 9.50 | 1 1/2 | 24 | 3.00 | 3.00 | 1.28 | 4.000 | 3.00 | 11.00 | 17.00 | 12.00 | 2.25 | 3.81 |

[1]NPTF ports are available at no extra charge.
[2]SAE straight thread ports are standard and are indicated by port number.

### Style DE – Dimensional and Mounting Data

| Bore Ø | Rod No. | MM Rod Ø | Minimum XI[3] Styles 4, 8 & 9 | Minimum XI[3] Style 55 | Style DE Minimum Stroke | Add Stroke LG | Add Stroke P | Add Stroke Maximum XI[4] Styles 4, 8 & 9 | Add Stroke Maximum XI[4] Style 55 | Add Stroke ZB Max. |
|---|---|---|---|---|---|---|---|---|---|---|
| 7.00 | 1 (std.) | 3.000 | 7.06 | 9.69 | 1.13 | 8.50 | 5.63 | 5.94 | 8.56 | 12.16 |
| | 2 | 5.000 | 7.06 | 11.44 | 1.13 | 8.50 | 5.63 | 5.94 | 10.31 | 12.16 |
| | 3 | 3.500 | 7.06 | 10.44 | 1.13 | 8.50 | 5.63 | 5.94 | 9.31 | 12.16 |
| | 4 | 4.000 | 7.06 | 10.56 | 1.13 | 8.50 | 5.63 | 5.94 | 9.44 | 12.16 |
| | 5 | 4.500 | 7.06 | 11.31 | 1.13 | 8.50 | 5.63 | 5.94 | 10.19 | 12.16 |
| 8.00 | 1 (std.) | 3.500 | 7.56 | 10.94 | 1.13 | 9.50 | 6.38 | 6.44 | 9.81 | 13.28 |
| | 2 | 5.500 | 7.56 | 12.81 | 1.13 | 9.50 | 6.38 | 6.44 | 11.69 | 13.28 |
| | 3 | 4.000 | 7.56 | 11.06 | 1.13 | 9.50 | 6.38 | 6.44 | 9.94 | 13.28 |
| | 4 | 4.500 | 7.56 | 11.81 | 1.13 | 9.50 | 6.38 | 6.44 | 10.69 | 13.28 |
| | 5 | 5.000 | 7.56 | 11.94 | 1.13 | 9.50 | 6.38 | 6.44 | 10.81 | 13.28 |

[3]Dimension XI to be specified by customer. Reference point for rod end Style 55 is end of piston rod.
[4]Dimensions shown are valid for standard WF and WG dimension.

View Table of Contents



## Spherical Bearing Mounting
Style SE

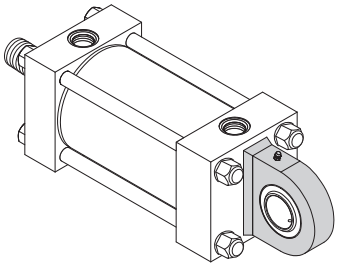

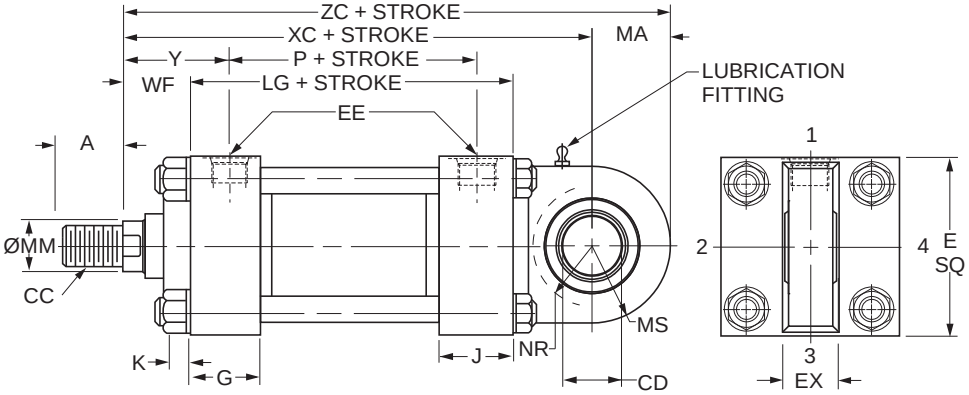


### Style SE — Dimensional and Mounting Data

| Bore Ø | Rod No. | MM Rod Ø | A | CD[3] Ø +0.0000 -0.0005 | E | EE NPTF[1] | EE SAE[2] | EX | G | J | K Max. | MS | MA | NR | WF | Y |
|---|---|---|---|---|---|---|---|---|---|---|---|---|---|---|---|---|
| 7.00 | 1 (std.) | 3.000 | 3.50 | 3.5000 | 8.50 | 1 1/4 | 20 | 3.06 | 2.75 | 2.75 | 1.16 | 4.00 | 4.00 | 3.68 | 2.25 | 3.69 |
| | 2 | 5.000 | 3.50 | 3.5000 | 8.50 | 1 1/4 | 20 | 3.06 | 2.75 | 2.75 | 1.16 | 4.00 | 4.00 | 3.68 | 2.25 | 3.69 |
| | 3 | 3.500 | 3.50 | 3.5000 | 8.50 | 1 1/4 | 20 | 3.06 | 2.75 | 2.75 | 1.16 | 4.00 | 4.00 | 3.68 | 2.25 | 3.69 |
| | 4 | 4.000 | 3.50 | 3.5000 | 8.50 | 1 1/4 | 20 | 3.06 | 2.75 | 2.75 | 1.16 | 4.00 | 4.00 | 3.68 | 2.25 | 3.69 |
| | 5 | 4.500 | 3.50 | 3.5000 | 8.50 | 1 1/4 | 20 | 3.06 | 2.75 | 2.75 | 1.16 | 4.00 | 4.00 | 3.68 | 2.25 | 3.69 |
| 8.00 | 1 (std.) | 3.500 | 3.50 | 4.0000 | 9.50 | 1 1/2 | 24 | 3.50 | 3.00 | 3.00 | 1.28 | 4.50 | 4.50 | 4.13 | 2.25 | 3.81 |
| | 2 | 5.500 | 3.50 | 4.0000 | 9.50 | 1 1/2 | 24 | 3.50 | 3.00 | 3.00 | 1.28 | 4.50 | 4.50 | 4.13 | 2.25 | 3.81 |
| | 3 | 4.000 | 3.50 | 4.0000 | 9.50 | 1 1/2 | 24 | 3.50 | 3.00 | 3.00 | 1.28 | 4.50 | 4.50 | 4.13 | 2.25 | 3.81 |
| | 4 | 4.500 | 3.50 | 4.0000 | 9.50 | 1 1/2 | 24 | 3.50 | 3.00 | 3.00 | 1.28 | 4.50 | 4.50 | 4.13 | 2.25 | 3.81 |
| | 5 | 5.000 | 3.50 | 4.0000 | 9.50 | 1 1/2 | 24 | 3.50 | 3.00 | 3.00 | 1.28 | 4.50 | 4.50 | 4.13 | 2.25 | 3.81 |

[1]NPTF ports are available at no extra charge.
[2]SAE straight thread ports are standard and are indicated by port number.
[3]Dimension CD is pin diameter.

### Style SE – Dimensional and Mounting Data

| Bore Ø | Rod No. | MM Rod Ø | Thread Style 8 CC[4] | A | Add Stroke LG | P | XC | XL | ZC |
|---|---|---|---|---|---|---|---|---|---|
| 7.00 | 1 (std.) | 3.000 | 2 3/4-12 | 3.50 | 8.50 | 5.63 | 15.25 | 23.25 | 19.25 |
| | 2 | 5.000 | [4] | [4] | 8.50 | 5.63 | 15.25 | 23.25 | 19.25 |
| | 3 | 3.500 | [4] | [4] | 8.50 | 5.63 | 15.25 | 23.25 | 19.25 |
| | 4 | 4.000 | [4] | [4] | 8.50 | 5.63 | 15.25 | 23.25 | 19.25 |
| | 5 | 4.500 | [4] | [4] | 8.50 | 5.63 | 15.25 | 23.25 | 19.25 |
| 8.00 | 1 (std.) | 3.500 | 3 1/4-12 | 3.50 | 9.50 | 6.38 | 16.75 | 25.25 | 21.25 |
| | 2 | 5.500 | [4] | [4] | 9.50 | 6.38 | 16.75 | 25.25 | 21.25 |
| | 3 | 4.000 | [4] | [4] | 9.50 | 6.38 | 16.75 | 25.25 | 21.25 |
| | 4 | 4.500 | [4] | [4] | 9.50 | 6.38 | 16.75 | 25.25 | 21.25 |
| | 5 | 5.000 | [4] | [4] | 9.50 | 6.38 | 16.75 | 25.25 | 21.25 |

[4] To match pin diameter in rod eye and cap, when an oversize rod is required, specify rod end style '3', 'CC' thread and 'A' thread length for the standard rod diameter (Rod No. 1 for the bore), and 'WF' for the oversize rod. Order the rod eye and clevis bracket for the required bore size from the tables on the Style SE Spherical Bearing Accessories page.

### Style SE – Recommended maximum swivel angle on each side of the cylinder centerline.

| Bore Ø | Head End Mounted Angle a | Head End Mounted Tan. of a | Cap End Mounted Angle a | Cap End Mounted Tan. of a |
|---|---|---|---|---|
| 7.00 | 3.00° | 0.052 | 3.00° | 0.052 |
| 8.00 | 3.00° | 0.052 | 3.00° | 0.052 |

Note: Dimension X is the maximum off center mounting of the cylinder. To determine dimension X for various stroke lengths multiply the distance between pivot pin holes by tangent of angle a. For extended position use X = XL + 2X stroke.

### Mounting Information
Head End Mounting

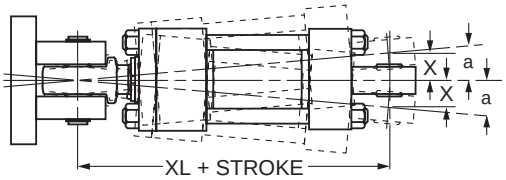


Cap End Mounting

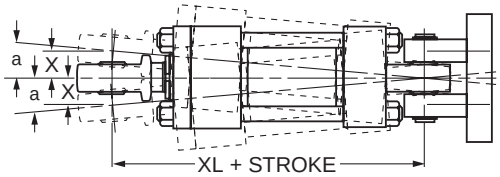

View Table of Contents

## Double Rod Cylinder
Style K

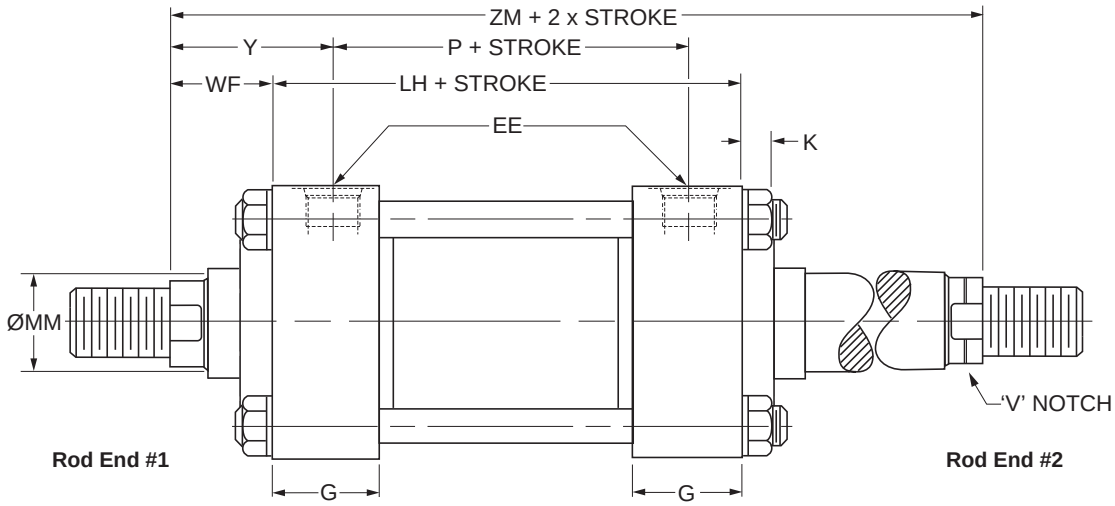


## Double Rod End Mounting Styles

See Mounting Groups page in Section H for guidance on double rod end cylinder mounting style selection.

| Mounting Styles for Single Rod Models | Mounting Styles for Corresponding Double Rod Models[1] | | Dimensions Shown on This Page Supplement Dimensions on 7.00" - 8.00" Bore Pages Listed Below |
|---|---|---|---|
| | Load Connected To Rod On Cylinder Mounting End | Load Connected To Rod Opposite Cylinder Mounting End | |
| TB | KTB | KTC | 72 |
| TD | KTD | KTD | 72 |
| J | KJ | KH | 73 |
| JB | KJB | KHB | 74 |
| JJ | KJJ | KHH | 75 |
| C | KC | KC | 78 |
| F | KF | KF | 78 |
| D | KD | KDB | 80 |
| DD | KDD[2] | KDD[2] | 82 |
| DE | KDE[2] | KDE[2] | 83 |

[1] Connect load to piston rod without 'V' notch. If only one end of the Double Rod Cylinder is to be cushioned, be sure to clearly specify which end this will be.

[2] Specify XI dimension for Styles DD & DE from #1 rod end (without 'V' notch).

| Bore Ø | Rod No. | MM Rod Ø | WF | Add Stroke | | | Add 2X Stroke |
|---|---|---|---|---|---|---|---|
| | | | | LH | SNK | SSK | ZM |
| 7.00 | 1 (std.) | 3.00 | 2.25 | 8.50 | 5.38 | 5.75 | 13.00 |
| | 2 | 5.00 | 2.25 | 8.50 | 5.38 | 5.75 | 13.00 |
| | 3 | 3.50 | 2.25 | 8.50 | 5.38 | 5.75 | 13.00 |
| | 4 | 4.00 | 2.25 | 8.50 | 5.38 | 5.75 | 13.00 |
| | 5 | 4.50 | 2.25 | 8.50 | 5.38 | 5.75 | 13.00 |
| 8.00 | 1 (std.) | 3.50 | 2.25 | 9.50 | 6.13 | 6.75 | 14.00 |
| | 2 | 5.50 | 2.25 | 9.50 | 6.13 | 6.75 | 14.00 |
| | 3 | 4.00 | 2.25 | 9.50 | 6.13 | 6.75 | 14.00 |
| | 4 | 4.50 | 2.25 | 9.50 | 6.13 | 6.75 | 14.00 |
| | 5 | 5.00 | 2.25 | 9.50 | 6.13 | 6.75 | 14.00 |
| **Replaces On single rod mounting styles:** | | | | **LG** | **SN** | **SS** | – |
| | | | | **All Mtg. Styles** | **F** | **C** | **All Mtg. Styles** |

## How to Use Double Rod Cylinder Dimension Drawings

To determine dimensions for a double rod cylinder, first refer to the desired single rod mounting style cylinder shown on preceding pages of this catalog. (See table above.) After selecting necessary dimensions from that drawing, return to this page supplement the single rod dimensions with those shown on drawing at right and dimension table below. Note that double rod cylinders have a head (Dim. G) at both ends and that dimension LH replaces LG. The double rod dimensions differ from, or are in addition to those for single rod cylinders shown on preceding pages and provide the information needed to completely dimension a double rod cylinder.

On a double rod cylinder where the two rod ends are different, be sure to clearly state which rod end is to be assembled at which end. Port position 1 is standard. If other than standard, specify pos. 2, 3 or 4 when viewed from rod end #1 only. See port position information in Section H.

View Table of Contents



# Notes

View Table of Contents

# Section D

## Series 2HB 1.50"-6.00"/ 3HB 7.00" and 8.00" Bore Heavy Duty Hydraulic Cylinders


| | 2HB 1.50"-6.00" Bore | 3HB 7.00" & 8.00" Bore |
|---|---|---|
| Performance | 88 | 88 |
| Specifications, Mounting Styles | 89 | 89 |
| Rod End Styles and Dimensions | 90-91 | 103 |
| T Mount Dimensions | 92 | 104 |
| C Mount Dimensions | 93 | 104 |
| JJ Mount Dimensions | 94 | 105 |
| HH Mount Dimensions | 95 | 105 |
| BB Mount Dimensions | 96 | 106 |
| D Mount Dimensions | 97 | 107 |
| DB Mount Dimensions | 98 | 108 |
| DD Mount Dimensions | 99 | – |
| DE Mount Dimensions | 99 | 109 |
| Style SB Spherical Bearing Mounting | 100 | – |
| Style SE Spherical Bearing Mounting | 101 | 110 |
| Double Rod Cylinders / Gland Retention | 102 | 111 |
| 3HB 8” Bore Threaded Flange | – | 112 |

View Table of Contents

# Parker Series 2HB 1.50"-6.00" and 3HB 7.00" & 8.00" Bore Heavy Duty Hydraulic Cylinders

Series 2HB 1.50"-6.00" and 3HB 7.00" & 8.00" bore cylinders are envelope pressure rated at 3,000 psi across the entire bore size and mounting style range. Non-tie rod construction with bolt-on gland and robust Tri-Lip rod sealing system offer superior performance. Head and cap are bolted to flanges that are threaded to each end of the cylinder body and offer several lifetime ownership advantages.

- Improved fatigue life compared to welded flange construction
- Easier to service than tie rod styles
- Clean appearance improves machine aesthetics
- Lower weight in longer strokes

**Primary Seal** – Polyurethane Tri-Lip Rod Seal is a proven leak proof design – completely self-compensating and self-relieving to withstand variations and conform to mechanical deflection that may occur. Alternative seal materials are available to suit your application.

**Secondary Seal** – Polyurethane Rod Wiper – wipes clean any oil film adhering to the rod on the extend stroke and cleans the rod on the return stroke.

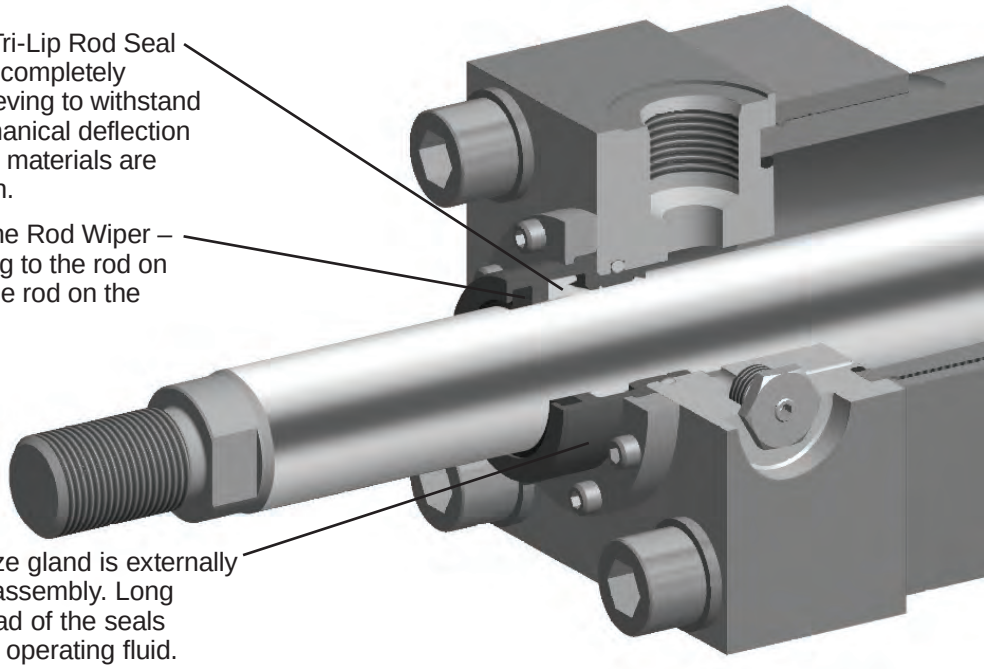

**Rod Gland Assembly** – Bronze gland is externally removable without cylinder disassembly. Long inboard bearing surface is ahead of the seals assuring lubrication by cylinder operating fluid.

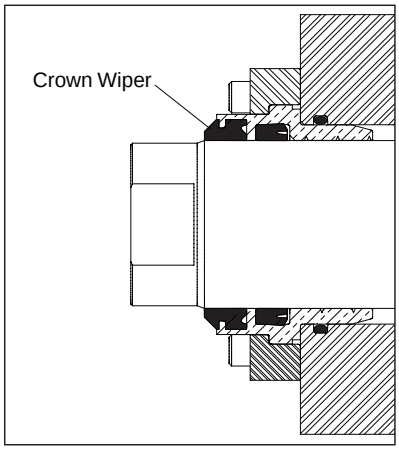


**Parker Crown Wiper™ for Series 2HB 1.50"-6.00" and 3HB 7.00" & 8.00" bore** – For environments that contain fine abrasive particulate specify the Crown Wiper option. The Crown Wiper is a proven superior alternative to piston rod end boots or metallic wipers that can ingest particulate. It has a sharp leading edge to effectively clean the piston rod and a beveled shape to prevent contaminant intrusion by channeling it away from the gland. It also acts as a secondary seal to wipe clean any oil film adhering to the rod on the extend stroke.

View Table of Contents

## Standard Specifications

- Heavy Duty Service – ANSI/(NFPA) T3.6.7R3 - 2009 Specifications and Mounting Dimension Standards
- Standard Construction – Square Head – Bolted Design
- Nominal Pressure – 3000 psi[1]
- Standard Fluid – Hydraulic Oil
- Standard Temperature – –10°F to +165°F[2]
- Bore Diameters – 1.50" through 8.00"

*In line with our policy of continuing product improvement, specifications in this catalog are subject to change.*

Note: Series 2HB and 3HB Hydraulic Cylinders fully meet ANSI/(NFPA) T3.6.7R3 - 2009 Specifications and Mounting Dimension Standards for Square Head Industrial Fluid Power Cylinders.

- Piston Rod Diameter – 0.625" through 5.500"
- Mounting Styles – 11 standard styles at various application ratings
- Strokes – Available in any practical stroke length. See 2H & 3H Family Model Number / How to Order page for Series 2HB & 3HB minimum stroke lengths.
- Cushions – Optional at either end or both ends of stroke. "Float Check" standard at cap end of 1.50" - 6.00" bore.
- Rod Ends – Four Standard Choices – Specials to Order

[1] If hydraulic operating pressure exceeds 3000 psi, send application data for engineering evaluation and recommendation. See Section H for actual design factors.

[2] See Section H for higher temperature service.

## Available Mounting Styles

Basic

**Style T**
1.50" - 8.00"

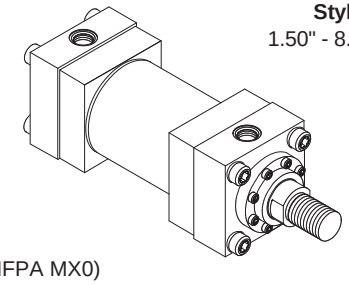

(NFPA MX0)

Side Lug

**Style C**
1.50" - 8.00"

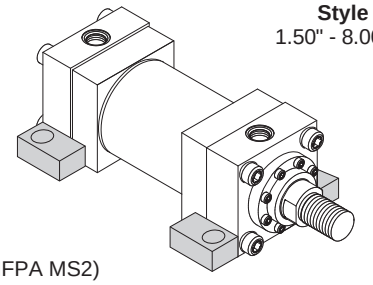

(NFPA MS2)

Head Rectangular

**Style JJ**
1.50" - 8.00"

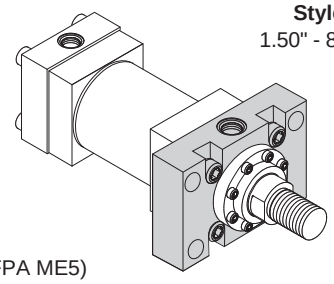

(NFPA ME5)

Cap Rectangular

**Style HH**
1.50" - 8.00"

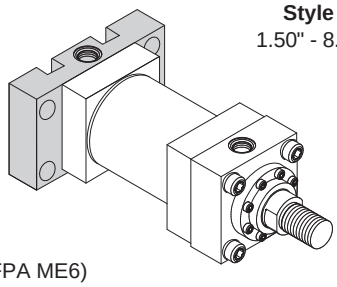

(NFPA ME6)

Cap Fixed Clevis

**Style BB**
1.50" - 8.00"

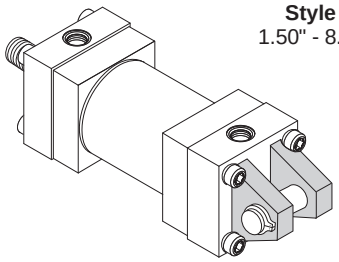

(NFPA MP1)

Head Trunnion

**Style D**
1.50" - 7.00"

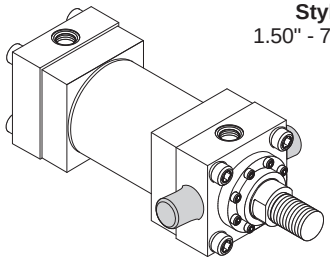

(NFPA MT1)

Cap Trunnion

**Style DB**
1.50" - 7.00"

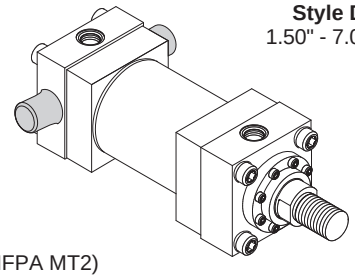

(NFPA MT2)

Intermediate Fixed Trunnion

**Style DD**
1.50" - 3.25"

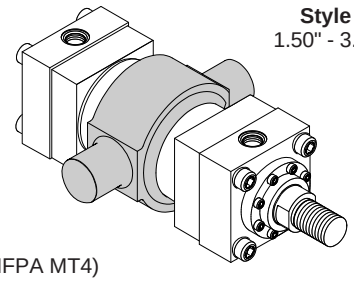

(NFPA MT4)

HD Intermediate Fixed Trunnion

**Style DE**
4.00" - 8.00"

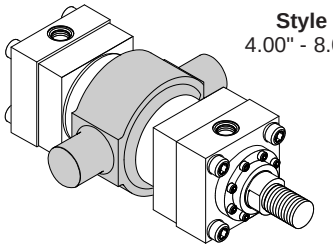

Style DE conforms to NFPA dimensional standard.

Spherical Bearing

**Style SB**
1.50" - 6.00"

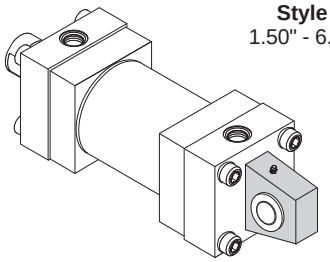

HD Spherical Bearing

**Style SE**
1.50" - 8.00"

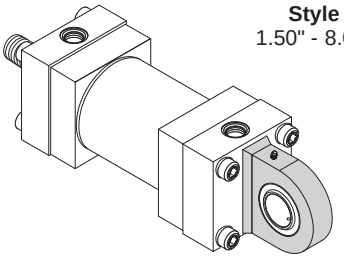

Double Rod Cylinders

**Style KT**
**Shown**
1.50" - 8.00"

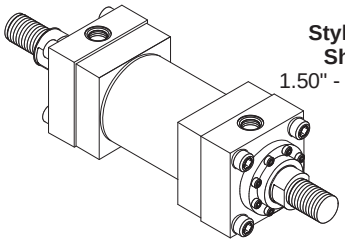

Most of the above illustrated mounting styles are available in double rod cylinders.

View Table of Contents

## Rod End Dimensions – circular bolt-on retainer construction

**Thread Style 4 (NFPA Style SM)**
**Small Male**

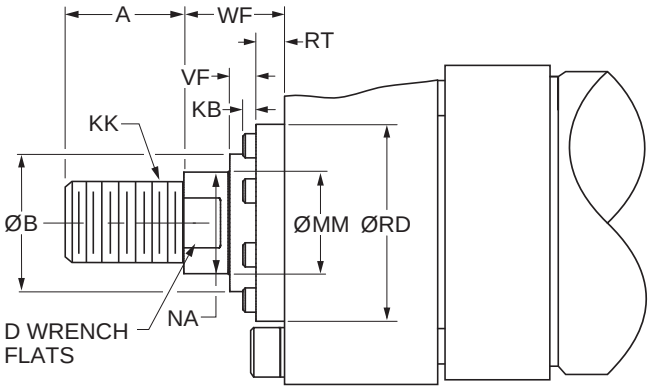


**Thread Style 8 (NFPA Style IM)**
**Intermediate Male**

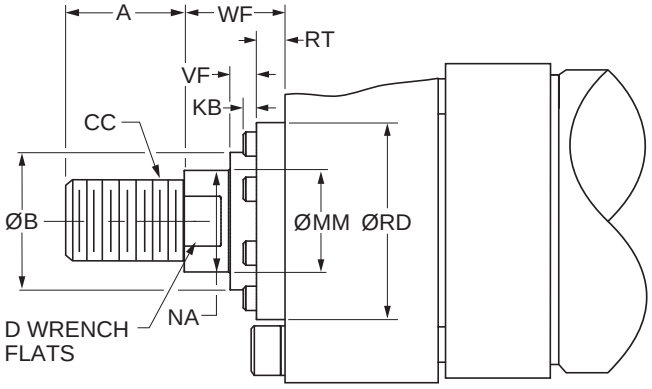


See Gland Retention page to determine which bore, rod and mounting style combinations have circular bolt-on retainers and which have tie rod retained glands.

## Rod End Dimensions

| Bore Ø | Rod No. | MM Rod Ø | Thread Style 8 CC | Thread Style 4 KK | A | B Ø +.000 -.002 | D | F | KB | NA | RD | RT | V | VF | W | WF |
|---|---|---|---|---|---|---|---|---|---|---|---|---|---|---|---|---|
| 1.50 | 1 (Std.) | 0.625 | 1/2-20 | 7/16-20 | 0.75 | 1.124 | 0.50 | 0.38 | 0.03 | 0.56 | 1.94 | 0.36 | 0.25 | 0.27 | 0.63 | 1.00 |
| | 2 | 1.000 | 7/8-14 | 3/4-16 | 1.13 | 1.499 | 0.88 | 0.38 | 0.03 | 0.94 | 2.38 | 0.36 | 0.50 | 0.52 | 1.00 | 1.38 |
| 2.00 | 1 (Std.) | 1.000 | 7/8-14 | 3/4-16 | 1.13 | 1.499 | 0.88 | 0.63 | 0.03 | 0.94 | 2.38 | 0.36 | 0.25 | 0.52 | 0.75 | 1.38 |
| | 2 | 1.375 | 1 1/4-12 | 1-14 | 1.63 | 1.999 | 1.13 | 0.63 | 0.19 | 1.31 | 2.87 | 0.36 | 0.38 | 0.64 | 1.00 | 1.63 |
| 2.50 | 1 (Std.) | 1.000 | 7/8-14 | 3/4-16 | 1.13 | 1.499 | 0.88 | 0.63 | 0.03 | 0.94 | 2.38 | 0.36 | 0.25 | 0.52 | 0.75 | 1.38 |
| | 2 | 1.750 | 1 1/2-12 | 1 1/4-12 | 2.00 | 2.374 | 1.50 | 0.63 | 0.03 | 1.69 | 3.47 | 0.60 | 0.50 | 0.53 | 1.25 | 1.88 |
| | 3 | 1.375 | 1 1/4-12 | 1-14 | 1.63 | 1.999 | 1.13 | 0.63 | 0.19 | 1.31 | 2.87 | 0.36 | 0.38 | 0.64 | 1.00 | 1.63 |
| 3.25 | 1 (Std.) | 1.375 | 1 1/4-12 | 1-14 | 1.63 | 1.999 | 1.13 | 0.75 | 0.19 | 1.31 | 2.87 | 0.36 | 0.25 | 0.64 | 0.88 | 1.63 |
| | 2 | 2.000 | 1 3/4-12 | 1 1/2-12 | 2.25 | 2.624 | 1.69 | 0.75 | 0.13 | 1.94 | 3.72 | 0.60 | 0.38 | 0.53 | 1.25 | 2.00 |
| | 3 | 1.750 | 1 1/2-12 | 1 1/4-12 | 2.00 | 2.374 | 1.50 | 0.75 | 0.03 | 1.69 | 3.47 | 0.60 | 0.38 | 0.53 | 1.13 | 1.88 |
| 4.00 | 1 (Std.) | 1.750 | 1 1/2-12 | 1 1/4-12 | 2.00 | 2.374 | 1.50 | 0.88 | 0.03 | 1.69 | 3.47 | 0.60 | 0.25 | 0.53 | 1.00 | 1.88 |
| | 2 | 2.500 | 2 1/4-12 | 1 7/8-12 | 3.00 | 3.124 | 2.06 | 0.88 | 0.25 | 2.38 | 4.25 | 0.60 | 0.38 | 0.65 | 1.38 | 2.25 |
| | 3 | 2.000 | 1 3/4-12 | 1 1/2-12 | 2.25 | 2.624 | 1.69 | 0.88 | 0.13 | 1.94 | 3.72 | 0.60 | 0.25 | 0.53 | 1.13 | 2.00 |
| 5.00 | 1 (Std.) | 2.000 | 1 3/4-12 | 1 1/2-12 | 2.25 | 2.624 | 1.69 | 0.88 | 0.13 | 1.94 | 3.72 | 0.60 | 0.25 | 0.53 | 1.13 | 2.00 |
| | 2 | 3.500 | 3 1/4-12 | 2 1/2-12 | 3.50 | 4.249 | 3.00 | 0.88 | - | 3.38 | 5.76 | 0.91 | 0.38 | 0.34 | 1.38 | 2.25 |
| | 3 | 2.500 | 2 1/4-12 | 1 7/8-12 | 3.00 | 3.124 | 2.06 | 0.88 | 0.25 | 2.38 | 4.25 | 0.60 | 0.38 | 0.65 | 1.38 | 2.25 |
| | 4 | 3.000 | 2 3/4-12 | 2 1/4-12 | 3.50 | 3.749 | 2.63 | 0.88 | - | 2.88 | 5.26 | 0.85 | 0.38 | 0.41 | 1.38 | 2.25 |
| 6.00 | 1 (Std.) | 2.500 | 2 1/4-12 | 1 7/8-12 | 3.00 | 3.124 | 2.06 | 1.00 | 0.25 | 2.38 | 4.25 | 0.60 | 0.25 | 0.65 | 1.25 | 2.25 |
| | 2 | 4.000 | 3 3/4-12 | 3-12 | 4.00 | 4.749 | 3.38 | 1.00 | - | 3.88 | 6.31 | 0.91 | 0.25 | 0.34 | 1.25 | 2.25 |
| | 3 | 3.000 | 2 3/4-12 | 2 1/4-12 | 3.50 | 3.749 | 2.63 | 1.00 | - | 2.88 | 5.26 | 0.85 | 0.25 | 0.41 | 1.25 | 2.25 |
| | 4 | 3.500 | 3 1/4-12 | 2 1/2-12 | 3.50 | 4.249 | 3.00 | 1.00 | - | 3.38 | 5.76 | 0.91 | 0.25 | 0.34 | 1.25 | 2.25 |

**"Special" Thread Style 3**
Special thread, extension, rod eye, blank, etc., are also available.

To order, specify "Style 3" and give desired dimensions for KK, A, W or WF. If otherwise special, furnish dimensioned sketch.

### Tie Rod Retained Gland

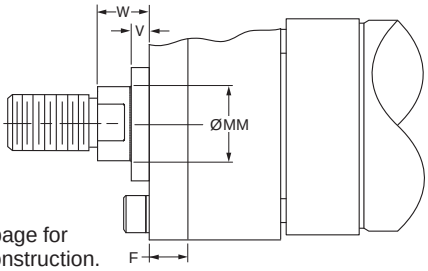


See Gland Retention page for styles that have this construction.

View Table of Contents

## Rod End Dimensions – circular bolt-on retainer construction

**Thread Style 9[2]**
**(NFPA Style SF) Small Female**

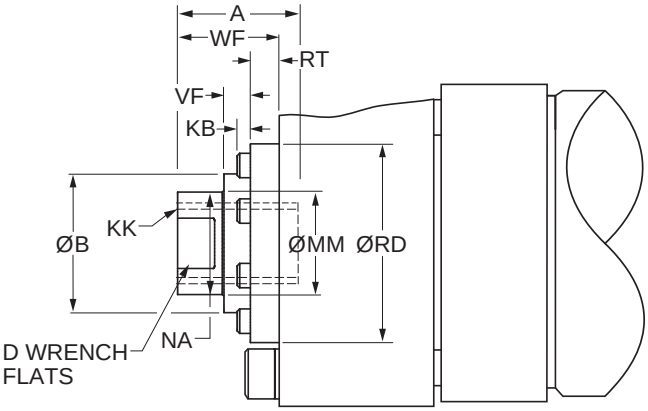


**Style 55[1]**
**Flanged Rod End**

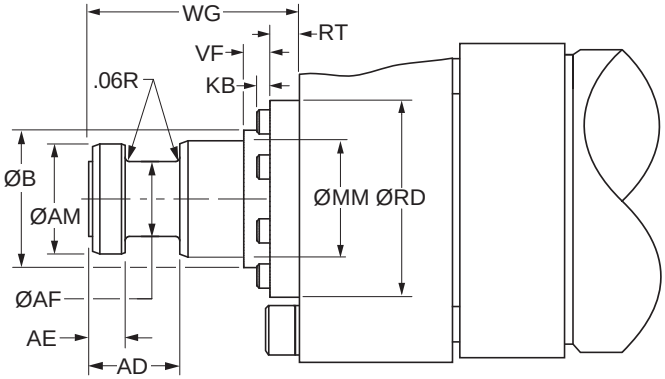


See Gland Retention page to determine which bore, rod and mounting style combinations have circular bolt-on retainers and which have tie rod retained glands.

## Rod End Dimensions

| Bore Ø | Rod No. | MM Rod Ø | Thread Style 9 KK | A | AD | AE +.001 -.001 | AF Ø | AM Ø | B Ø +.000 -.002 | D | KB | NA | RD | RT | VF | WF | WG |
|---|---|---|---|---|---|---|---|---|---|---|---|---|---|---|---|---|---|
| 1.50 | 1 (Std.) | 0.625 | 7/16-20 | 0.75 | 0.63 | 0.249 | 0.38 | 0.57 | 1.124 | 0.50 | 0.03 | 0.56 | 1.94 | 0.36 | 0.27 | 1.00 | 1.75 |
| | 2 | 1.000 | 3/4-16 | 1.13 | 0.94 | 0.374 | 0.69 | 0.95 | 1.499 | 0.88 | 0.03 | 0.94 | 2.38 | 0.36 | 0.52 | 1.38 | 2.38 |
| 2.00 | 1 (Std.) | 1.000 | 3/4-16 | 1.13 | 0.94 | 0.374 | 0.69 | 0.95 | 1.499 | 0.88 | 0.03 | 0.94 | 2.38 | 0.36 | 0.52 | 1.38 | 2.38 |
| | 2 | 1.375 | 1-14 | 1.63 | 1.06 | 0.374 | 0.88 | 1.32 | 1.999 | 1.13 | 0.19 | 1.31 | 2.87 | 0.36 | 0.64 | 1.63 | 2.75 |
| 2.50 | 1 (Std.) | 1.000 | 3/4-16 | 1.13 | 0.94 | 0.374 | 0.69 | 0.95 | 1.499 | 0.88 | 0.03 | 0.94 | 2.38 | 0.36 | 0.52 | 1.38 | 2.38 |
| | 2 | 1.750 | 1 1/4-12 | 2.00 | 1.31 | 0.499 | 1.13 | 1.70 | 2.374 | 1.50 | 0.03 | 1.69 | 3.47 | 0.60 | 0.53 | 1.88 | 3.13 |
| | 3 | 1.375 | 1-14 | 1.63 | 1.06 | 0.374 | 0.88 | 1.32 | 1.999 | 1.13 | 0.19 | 1.31 | 2.87 | 0.36 | 0.64 | 1.63 | 2.75 |
| 3.25 | 1 (Std.) | 1.375 | 1-14 | 1.63 | 1.06 | 0.374 | 0.88 | 1.32 | 1.999 | 1.13 | 0.19 | 1.31 | 2.87 | 0.36 | 0.64 | 1.63 | 2.75 |
| | 2 | 2.000 | 1 1/2-12 | 2.25 | 1.69 | 0.624 | 1.38 | 1.95 | 2.624 | 1.69 | 0.13 | 1.94 | 3.72 | 0.60 | 0.53 | 2.00 | 3.75 |
| | 3 | 1.750 | 1 1/4-12 | 2.00 | 1.31 | 0.499 | 1.13 | 1.70 | 2.374 | 1.50 | 0.03 | 1.69 | 3.47 | 0.60 | 0.53 | 1.88 | 3.13 |
| 4.00 | 1 (Std.) | 1.750 | 1 1/4-12 | 2.00 | 1.31 | 0.499 | 1.13 | 1.70 | 2.374 | 1.50 | 0.03 | 1.69 | 3.47 | 0.60 | 0.53 | 1.88 | 3.13 |
| | 2 | 2.500 | 1 7/8-12 | 3.00 | 1.94 | 0.749 | 1.75 | 2.45 | 3.124 | 2.06 | 0.25 | 2.38 | 4.25 | 0.60 | 0.65 | 2.25 | 4.50 |
| | 3 | 2.000 | 1 1/2-12 | 2.25 | 1.69 | 0.624 | 1.38 | 1.95 | 2.624 | 1.69 | 0.13 | 1.94 | 3.72 | 0.60 | 0.53 | 2.00 | 3.75 |
| 5.00 | 1 (Std.) | 2.000 | 1 1/2-12 | 2.25 | 1.69 | 0.624 | 1.38 | 1.95 | 2.624 | 1.69 | 0.13 | 1.94 | 3.72 | 0.60 | 0.53 | 2.00 | 3.75 |
| | 2 | 3.500 | 2 1/2-12 | 3.50 | 2.69 | 0.999 | 2.50 | 3.45 | 4.249 | 3.00 | - | 3.38 | 5.76 | 0.91 | 0.34 | 2.25 | 5.63 |
| | 3 | 2.500 | 1 7/8-12 | 3.00 | 1.94 | 0.749 | 1.75 | 2.45 | 3.124 | 2.06 | 0.25 | 2.38 | 4.25 | 0.60 | 0.65 | 2.25 | 4.50 |
| | 4 | 3.000 | 2 1/4-12 | 3.50 | 2.44 | 0.874 | 2.25 | 2.95 | 3.749 | 2.63 | - | 2.88 | 5.26 | 0.85 | 0.41 | 2.25 | 4.88 |
| 6.00 | 1 (Std.) | 2.500 | 1 7/8-12 | 3.00 | 1.94 | 0.749 | 1.75 | 2.45 | 3.124 | 2.06 | 0.25 | 2.38 | 4.25 | 0.60 | 0.65 | 2.25 | 4.50 |
| | 2 | 4.000 | 3-12 | 4.00 | 2.69 | 0.999 | 3.00 | 3.95 | 4.749 | 3.38 | - | 3.88 | 6.31 | 0.91 | 0.34 | 2.25 | 5.75 |
| | 3 | 3.000 | 2 1/4-12 | 3.50 | 2.44 | 0.874 | 2.25 | 2.95 | 3.749 | 2.63 | - | 2.88 | 5.26 | 0.85 | 0.41 | 2.25 | 4.88 |
| | 4 | 3.500 | 2 1/2-12 | 3.50 | 2.69 | 0.999 | 2.50 | 3.45 | 4.249 | 3.00 | - | 3.38 | 5.76 | 0.91 | 0.34 | 2.25 | 5.63 |

### "Special" Thread Style 3

Special thread, extension, rod eye, blank, etc., are also available.

To order, specify "Style 3" and give desired dimensions for KK, A, W or WF. If otherwise special, furnish dimensioned sketch.

[1] For special WG dimension, specify "Style 3" and give desired dimension for WG. For other changes, place "S" in the model code, and describe rod end with dimensioned sketch.

[2] Style 9 stroke restrictions may apply. See Style 9 Minimum Stroke Table on How to Order page for details.

### Tie Rod Retained Gland

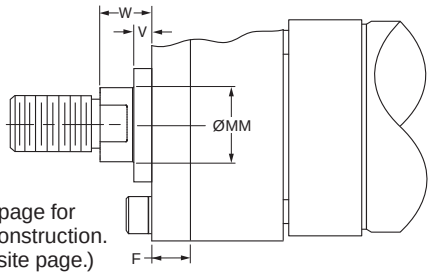


See Gland Retention page for styles that have this construction. (Dimensions on opposite page.)

View Table of Contents

## Basic Mounting
Style T
(NFPA Style MX0)

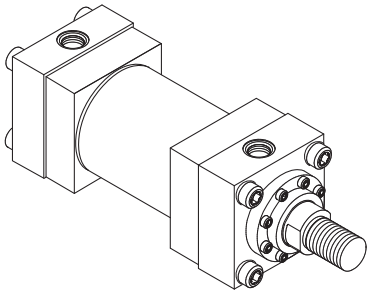

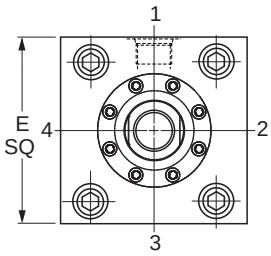


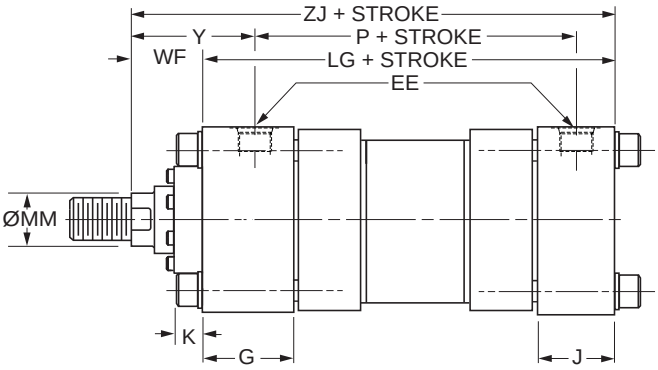


### Style T – Dimensional and Mounting Data

| Bore Ø | Rod No. | MM Rod Ø | E | EE | | G | J | K Max. | WF | Y | Add Stroke | | |
|---|---|---|---|---|---|---|---|---|---|---|---|---|---|
| | | | | NPTF[1] | SAE[2] | | | | | | LG | P | ZJ |
| 1.50 | 1 (std.) | 0.625 | 2.50 | 1/2 | 10 | 1.75 | 1.50 | 0.50 | 1.00 | 2.00 | 4.63 | 2.88 | 5.63 |
| | 2 | 1.000 | 2.50 | 1/2 | 10 | 1.75 | 1.50 | 0.50 | 1.38 | 2.38 | 4.63 | 2.88 | 6.00 |
| 2.00 | 1 (std.) | 1.000 | 3.00 | 1/2 | 10 | 1.75 | 1.50 | 0.67 | 1.38 | 2.38 | 4.63 | 2.88 | 6.00 |
| | 2 | 1.375 | 3.00 | 1/2 | 10 | 1.75 | 1.50 | 0.67 | 1.63 | 2.63 | 4.63 | 2.88 | 6.25 |
| 2.50 | 1 (std.) | 1.000 | 3.50 | 1/2 | 10 | 1.75 | 1.50 | 0.67 | 1.38 | 2.38 | 4.75 | 3.00 | 6.13 |
| | 2 | 1.750 | 3.50 | 1/2 | 10 | 1.75 | 1.50 | 0.67 | 1.88 | 2.88 | 4.75 | 3.00 | 6.63 |
| | 3 | 1.375 | 3.50 | 1/2 | 10 | 1.75 | 1.50 | 0.67 | 1.63 | 2.63 | 4.75 | 3.00 | 6.38 |
| 3.25 | 1 (std.) | 1.375 | 4.50 | 3/4 | 12 | 2.00 | 1.75 | 0.83 | 1.63 | 2.75 | 5.50 | 3.50 | 7.13 |
| | 2 | 2.000 | 4.50 | 3/4 | 12 | 2.00 | 1.75 | 0.83 | 2.00 | 3.13 | 5.50 | 3.50 | 7.50 |
| | 3 | 1.750 | 4.50 | 3/4 | 12 | 2.00 | 1.75 | 0.83 | 1.88 | 3.00 | 5.50 | 3.50 | 7.38 |
| 4.00 | 1 (std.) | 1.750 | 5.00 | 3/4 | 12 | 2.00 | 1.75 | 0.83 | 1.88 | 3.00 | 5.75 | 3.75 | 7.63 |
| | 2 | 2.500 | 5.00 | 3/4 | 12 | 2.00 | 1.75 | 0.83 | 2.25 | 3.38 | 5.75 | 3.75 | 8.00 |
| | 3 | 2.000 | 5.00 | 3/4 | 12 | 2.00 | 1.75 | 0.83 | 2.00 | 3.13 | 5.75 | 3.75 | 7.75 |
| 5.00 | 1 (std.) | 2.000 | 6.50 | 3/4 | 12 | 2.00 | 1.75 | 1.11 | 2.00 | 3.13 | 6.25 | 4.25 | 8.25 |
| | 2 | 3.500 | 6.50 | 3/4 | 12 | 2.00 | 1.75 | 1.11 | 2.25 | 3.38 | 6.25 | 4.25 | 8.50 |
| | 3 | 2.500 | 6.50 | 3/4 | 12 | 2.00 | 1.75 | 1.11 | 2.25 | 3.38 | 6.25 | 4.25 | 8.50 |
| | 4 | 3.000 | 6.50 | 3/4 | 12 | 2.00 | 1.75 | 1.11 | 2.25 | 3.38 | 6.25 | 4.25 | 8.50 |
| 6.00 | 1 (std.) | 2.500 | 7.50 | 1 | 16 | 2.25 | 2.25 | 1.25 | 2.25 | 3.50 | 7.38 | 4.88 | 9.63 |
| | 2 | 4.000 | 7.50 | 1 | 16 | 2.25 | 2.25 | 1.25 | 2.25 | 3.50 | 7.38 | 4.88 | 9.63 |
| | 3 | 3.000 | 7.50 | 1 | 16 | 2.25 | 2.25 | 1.25 | 2.25 | 3.50 | 7.38 | 4.88 | 9.63 |
| | 4 | 3.500 | 7.50 | 1 | 16 | 2.25 | 2.25 | 1.25 | 2.25 | 3.50 | 7.38 | 4.88 | 9.63 |

[1]NPTF ports are available at no extra charge.
[2]SAE straight thread ports are standard and are indicated by port number.

View Table of Contents

## Side Lug Mounting
Style C
(NFPA Style MS2)

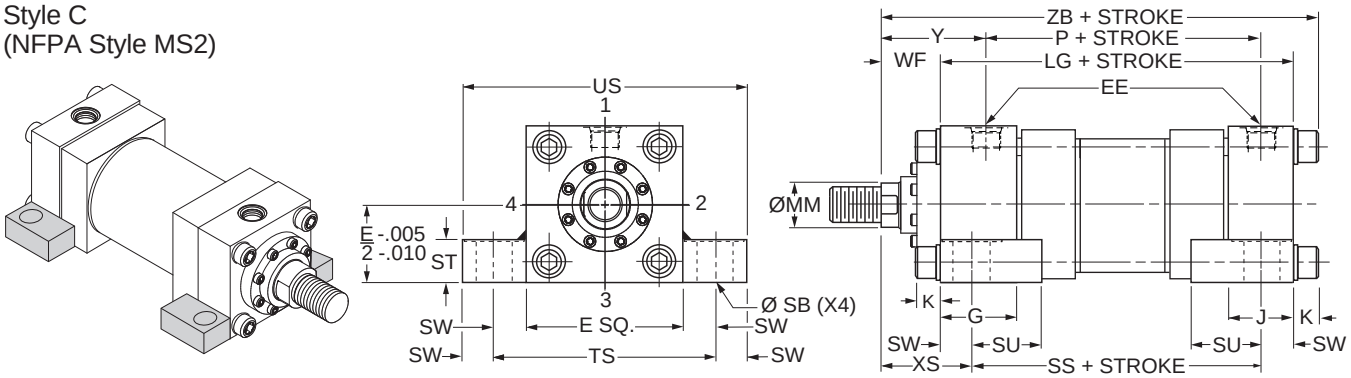


### Style C – Dimensional and Mounting Data

| Bore Ø | E | EE | | G | J | K Max. | SB[3] Ø | ST | SU | SW | TS | US | Add Stroke | | |
|---|---|---|---|---|---|---|---|---|---|---|---|---|---|---|---|
| | | NPTF[1] | SAE[2] | | | | | | | | | | LG | P | SS |
| 1.50 | 2.50 | 1/2 | 10 | 1.75 | 1.50 | 0.50 | 0.44 | 0.50 | 0.94 | 0.38 | 3.25 | 4.00 | 4.63 | 2.88 | 3.88 |
| 2.00 | 3.00 | 1/2 | 10 | 1.75 | 1.50 | 0.67 | 0.56 | 0.75 | 1.25 | 0.50 | 4.00 | 5.00 | 4.63 | 2.88 | 3.63 |
| 2.50 | 3.50 | 1/2 | 10 | 1.75 | 1.50 | 0.67 | 0.81 | 1.00 | 1.56 | 0.69 | 4.88 | 6.25 | 4.75 | 3.00 | 3.38 |
| 3.25 | 4.50 | 3/4 | 12 | 2.00 | 1.75 | 0.83 | 0.81 | 1.00 | 1.56 | 0.69 | 5.88 | 7.25 | 5.50 | 3.50 | 4.13 |
| 4.00 | 5.00 | 3/4 | 12 | 2.00 | 1.75 | 0.83 | 1.06 | 1.25 | 2.00 | 0.88 | 6.75 | 8.50 | 5.75 | 3.75 | 4.00 |
| 5.00 | 6.50 | 3/4 | 12 | 2.00 | 1.75 | 1.11 | 1.06 | 1.25 | 2.00 | 0.88 | 8.25 | 10.00 | 6.25 | 4.25 | 4.50 |
| 6.00 | 7.50 | 1 | 16 | 2.25 | 2.25 | 1.25 | 1.31 | 1.50 | 2.50 | 1.13 | 9.75 | 12.00 | 7.38 | 4.88 | 5.13 |

[1]NPTF ports are available at no extra charge.
[2]SAE straight thread ports are standard and are indicated by port number.
[3]Upper surface spot faced for socket head screws.

### Style C – Dimensional and Mounting Data

| Bore Ø | Rod No. | MM Rod Ø | WF | XS | Y | Add Stroke |
|---|---|---|---|---|---|---|
| | | | | | | ZB Max. |
| 1.50 | 1 (std.) | 0.625 | 1.00 | 1.38 | 2.00 | 6.13 |
| | 2 | 1.000 | 1.38 | 1.75 | 2.38 | 6.50 |
| 2.00 | 1 (std.) | 1.000 | 1.38 | 1.88 | 2.38 | 6.68 |
| | 2 | 1.375 | 1.63 | 2.13 | 2.63 | 6.92 |
| 2.50 | 1 (std.) | 1.000 | 1.38 | 2.06 | 2.38 | 6.80 |
| | 2 | 1.750 | 1.88 | 2.56 | 2.88 | 7.30 |
| | 3 | 1.375 | 1.63 | 2.31 | 2.63 | 7.05 |
| 3.25 | 1 (std.) | 1.375 | 1.63 | 2.31 | 2.75 | 7.96 |
| | 2 | 2.000 | 2.00 | 2.69 | 3.13 | 8.33 |
| | 3 | 1.750 | 1.88 | 2.56 | 3.00 | 8.21 |
| 4.00 | 1 (std.) | 1.750 | 1.88 | 2.75 | 3.00 | 8.46 |
| | 2 | 2.500 | 2.25 | 3.13 | 3.38 | 8.83 |
| | 3 | 2.000 | 2.00 | 2.88 | 3.13 | 8.58 |
| 5.00 | 1 (std.) | 2.000 | 2.00 | 2.88 | 3.13 | 9.36 |
| | 2 | 3.500 | 2.25 | 3.13 | 3.38 | 9.61 |
| | 3 | 2.500 | 2.25 | 3.13 | 3.38 | 9.61 |
| | 4 | 3.000 | 2.25 | 3.13 | 3.38 | 9.61 |
| 6.00 | 1 (std.) | 2.500 | 2.25 | 3.38 | 3.50 | 10.88 |
| | 2 | 4.000 | 2.25 | 3.38 | 3.50 | 10.88 |
| | 3 | 3.000 | 2.25 | 3.38 | 3.50 | 10.88 |
| | 4 | 3.500 | 2.25 | 3.38 | 3.50 | 10.88 |

View Table of Contents

## Head Rectangular Mounting
Style JJ
(NFPA Style ME5)

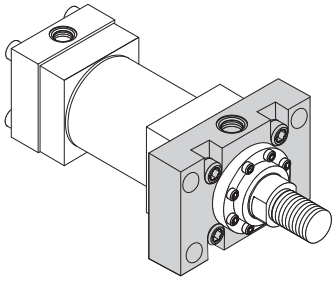

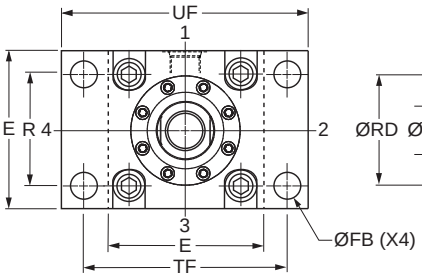


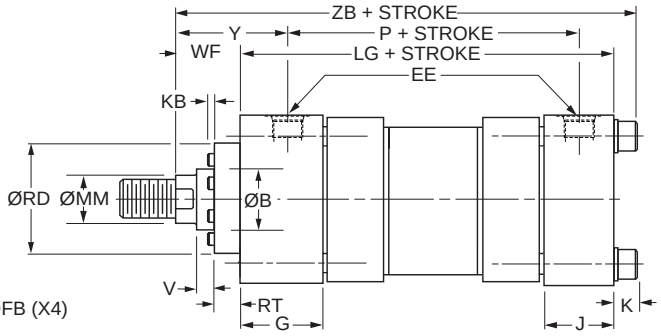


### Style JJ – Dimensional and Mounting Data

| Bore Ø | E | EE | | FB Ø | G | J | K Max. | R | TF | UF | Add Stroke | |
|---|---|---|---|---|---|---|---|---|---|---|---|---|
| | | NPTF[1] | SAE[2] | | | | | | | | LG | P |
| 1.50 | 2.50 | 1/2 | 10 | 0.44 | 1.75 | 1.50 | 0.50 | 1.63 | 3.44 | 4.25 | 4.63 | 2.88 |
| 2.00 | 3.00 | 1/2 | 10 | 0.56 | 1.75 | 1.50 | 0.67 | 2.05 | 4.13 | 5.13 | 4.63 | 2.88 |
| 2.50 | 3.50 | 1/2 | 10 | 0.56 | 1.75 | 1.50 | 0.67 | 2.55 | 4.63 | 5.63 | 4.75 | 3.00 |
| 3.25 | 4.50 | 3/4 | 12 | 0.69 | 2.00 | 1.75 | 0.83 | 3.25 | 5.88 | 7.13 | 5.50 | 3.50 |
| 4.00 | 5.00 | 3/4 | 12 | 0.69 | 2.00 | 1.75 | 0.83 | 3.82 | 6.38 | 7.63 | 5.75 | 3.75 |
| 5.00 | 6.50 | 3/4 | 12 | 0.94 | 2.00 | 1.75 | 1.11 | 4.95 | 8.19 | 9.75 | 6.25 | 4.25 |
| 6.00 | 7.50 | 1 | 16 | 1.06 | 2.25 | 2.25 | 1.25 | 5.73 | 9.44 | 11.25 | 7.38 | 4.88 |

[1]NPTF ports are available at no extra charge.
[2]SAE straight thread ports are standard and are indicated by port number.

### Style JJ – Dimensional and Mounting Data

| Bore Ø | Rod No. | MM Rod Ø | B Ø +.000 -.002 | KB | RD Ø | RT | V | WF | Y | Add Stroke |
|---|---|---|---|---|---|---|---|---|---|---|
| | | | | | | | | | | ZB Max |
| 1.50 | 1 (std.) | 0.625 | 1.124 | 0.03 | 1.94 | 0.36 | 0.27 | 1.00 | 2.00 | 6.13 |
| | 2 | 1.000 | 1.499 | 0.03 | 2.38 | 0.36 | 0.52 | 1.38 | 2.38 | 6.50 |
| 2.00 | 1 (std.) | 1.000 | 1.499 | 0.03 | 2.38 | 0.36 | 0.52 | 1.38 | 2.38 | 6.68 |
| | 2 | 1.375 | 1.999 | 0.19 | 2.87 | 0.36 | 0.64 | 1.63 | 2.63 | 6.92 |
| 2.50 | 1 (std.) | 1.000 | 1.499 | 0.03 | 2.38 | 0.36 | 0.52 | 1.38 | 2.38 | 6.80 |
| | 2 | 1.750 | 2.374 | 0.03 | 3.47 | 0.60 | 0.53 | 1.88 | 2.88 | 7.30 |
| | 3 | 1.375 | 1.999 | 0.19 | 2.87 | 0.36 | 0.64 | 1.63 | 2.63 | 7.05 |
| 3.25 | 1 (std.) | 1.375 | 1.999 | 0.19 | 2.87 | 0.36 | 0.64 | 1.63 | 2.75 | 7.96 |
| | 2 | 2.000 | 2.624 | 0.13 | 3.72 | 0.60 | 0.53 | 2.00 | 3.13 | 8.33 |
| | 3 | 1.750 | 2.374 | 0.03 | 3.47 | 0.60 | 0.53 | 1.88 | 3.00 | 8.21 |
| 4.00 | 1 (std.) | 1.750 | 2.374 | 0.03 | 3.47 | 0.60 | 0.53 | 1.88 | 3.00 | 8.46 |
| | 2 | 2.500 | 3.124 | 0.25 | 4.25 | 0.60 | 0.65 | 2.25 | 3.38 | 8.83 |
| | 3 | 2.000 | 2.624 | 0.13 | 3.72 | 0.60 | 0.53 | 2.00 | 3.13 | 8.58 |
| 5.00 | 1 (std.) | 2.000 | 2.624 | 0.13 | 3.72 | 0.60 | 0.53 | 2.00 | 3.13 | 9.36 |
| | 2 | 3.500 | 4.249 | - | 5.76 | 0.91 | 0.34 | 2.25 | 3.38 | 9.61 |
| | 3 | 2.500 | 3.124 | 0.25 | 4.25 | 0.60 | 0.65 | 2.25 | 3.38 | 9.61 |
| | 4 | 3.000 | 3.749 | - | 5.26 | 0.85 | 0.41 | 2.25 | 3.38 | 9.61 |
| 6.00 | 1 (std.) | 2.500 | 3.124 | 0.25 | 4.25 | 0.60 | 0.65 | 2.25 | 3.50 | 10.88 |
| | 2 | 4.000 | 4.749 | - | 6.31 | 0.91 | 0.34 | 2.25 | 3.50 | 10.88 |
| | 3 | 3.000 | 3.749 | - | 5.26 | 0.85 | 0.41 | 2.25 | 3.50 | 10.88 |
| | 4 | 3.500 | 4.249 | - | 5.76 | 0.91 | 0.34 | 2.25 | 3.50 | 10.88 |

View Table of Contents

## Cap Rectangular Flange Mounting

Style HH
(NFPA Style ME6)

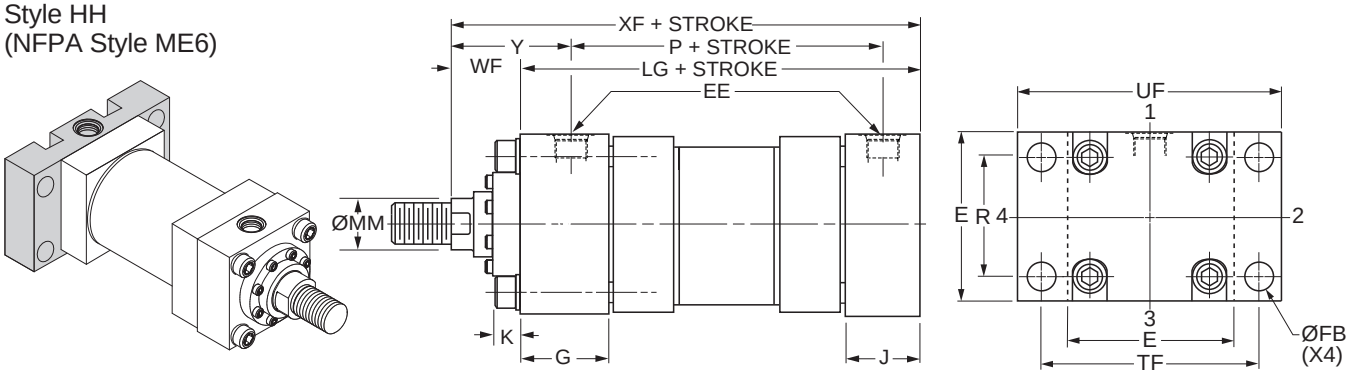


### Style HH – Dimensional and Mounting Data

| Bore Ø | E | EE | | FB Ø | G | J | K Max. | R | TF | UF | Add Stroke | |
|---|---|---|---|---|---|---|---|---|---|---|---|---|
| | | NPTF[1] | SAE[2] | | | | | | | | LG | P |
| 1.50 | 2.50 | 1/2 | 10 | 0.44 | 1.75 | 1.50 | 0.50 | 1.63 | 3.44 | 4.25 | 4.63 | 2.88 |
| 2.00 | 3.00 | 1/2 | 10 | 0.56 | 1.75 | 1.50 | 0.67 | 2.05 | 4.13 | 5.13 | 4.63 | 2.88 |
| 2.50 | 3.50 | 1/2 | 10 | 0.56 | 1.75 | 1.50 | 0.67 | 2.55 | 4.63 | 5.63 | 4.75 | 3.00 |
| 3.25 | 4.50 | 3/4 | 12 | 0.69 | 2.00 | 1.75 | 0.83 | 3.25 | 5.88 | 7.13 | 5.50 | 3.50 |
| 4.00 | 5.00 | 3/4 | 12 | 0.69 | 2.00 | 1.75 | 0.83 | 3.82 | 6.38 | 7.63 | 5.75 | 3.75 |
| 5.00 | 6.50 | 3/4 | 12 | 0.94 | 2.00 | 1.75 | 1.11 | 4.95 | 8.19 | 9.75 | 6.25 | 4.25 |
| 6.00 | 7.50 | 1 | 16 | 1.06 | 2.25 | 2.25 | 1.25 | 5.73 | 9.44 | 11.25 | 7.38 | 4.88 |

[1]NPTF ports are available at no extra charge.
[2]SAE straight thread ports are standard and are indicated by port number.

### Style HH – Dimensional and Mounting Data

| Bore Ø | Rod No. | MM Rod Ø | WF | Y | Add Stroke |
|---|---|---|---|---|---|
| | | | | | XF |
| 1.50 | 1 (std.) | 0.625 | 1.00 | 2.00 | 5.63 |
| | 2 | 1.000 | 1.38 | 2.38 | 6.00 |
| 2.00 | 1 (std.) | 1.000 | 1.38 | 2.38 | 6.00 |
| | 2 | 1.375 | 1.63 | 2.63 | 6.25 |
| 2.50 | 1 (std.) | 1.000 | 1.38 | 2.38 | 6.13 |
| | 2 | 1.750 | 1.88 | 2.88 | 6.63 |
| | 3 | 1.375 | 1.63 | 2.63 | 6.38 |
| 3.25 | 1 (std.) | 1.375 | 1.63 | 2.75 | 7.13 |
| | 2 | 2.000 | 2.00 | 3.13 | 7.50 |
| | 3 | 1.750 | 1.88 | 3.00 | 7.38 |
| 4.00 | 1 (std.) | 1.750 | 1.88 | 3.00 | 7.63 |
| | 2 | 2.500 | 2.25 | 3.38 | 8.00 |
| | 3 | 2.000 | 2.00 | 3.13 | 7.75 |
| 5.00 | 1 (std.) | 2.000 | 2.00 | 3.13 | 8.25 |
| | 2 | 3.500 | 2.25 | 3.38 | 8.50 |
| | 3 | 2.500 | 2.25 | 3.38 | 8.50 |
| | 4 | 3.000 | 2.25 | 3.38 | 8.50 |
| 6.00 | 1 (std.) | 2.500 | 2.25 | 3.50 | 9.63 |
| | 2 | 4.000 | 2.25 | 3.50 | 9.63 |
| | 3 | 3.000 | 2.25 | 3.50 | 9.63 |
| | 4 | 3.500 | 2.25 | 3.50 | 9.63 |

View Table of Contents

## Cap Fixed Clevis Mounting
Style BB
(NFPA Style MP1)

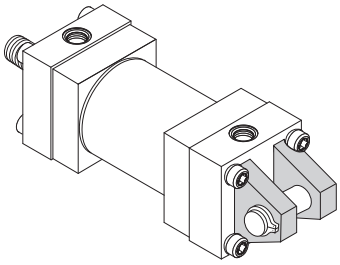

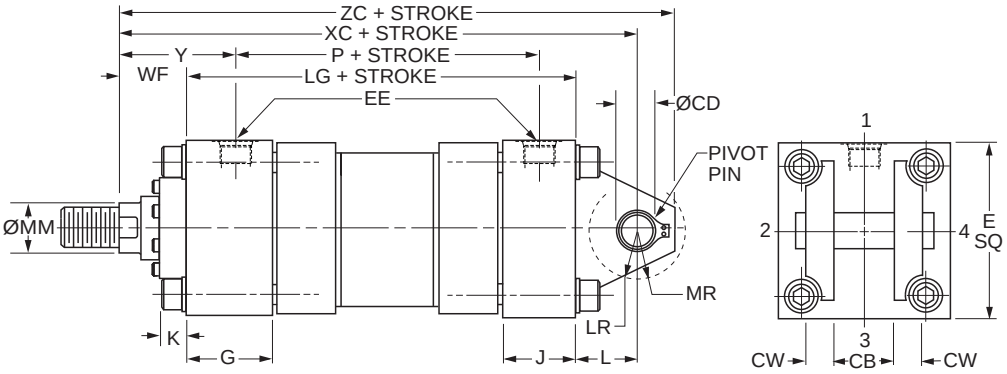


### Style BB – Dimensional and Mounting Data

| Bore Ø | E | EE | | CB | CD[3] Ø +.000 -.002 | CW | G | J | K Max. | L | LR | MR | Add Stroke | |
|---|---|---|---|---|---|---|---|---|---|---|---|---|---|---|
| | | NPTF[1] | SAE[2] | | | | | | | | | | LG | P |
| 1.50 | 2.50 | 1/2 | 10 | 0.75 | .501 | 0.50 | 1.75 | 1.50 | 0.50 | 0.75 | 0.56 | 0.63 | 4.63 | 2.88 |
| 2.00 | 3.00 | 1/2 | 10 | 1.25 | .751 | 0.63 | 1.75 | 1.50 | 0.67 | 1.25 | 1.00 | 0.94 | 4.63 | 2.88 |
| 2.50 | 3.50 | 1/2 | 10 | 1.25 | .751 | 0.63 | 1.75 | 1.50 | 0.67 | 1.25 | 0.94 | 0.94 | 4.75 | 3.00 |
| 3.25 | 4.50 | 3/4 | 12 | 1.50 | 1.001 | 0.75 | 2.00 | 1.75 | 0.83 | 1.50 | 1.25 | 1.19 | 5.50 | 3.50 |
| 4.00 | 5.00 | 3/4 | 12 | 2.00 | 1.376 | 1.00 | 2.00 | 1.75 | 0.83 | 2.13 | 1.75 | 1.63 | 5.75 | 3.75 |
| 5.00 | 6.50 | 3/4 | 12 | 2.50 | 1.751 | 1.25 | 2.00 | 1.75 | 1.11 | 2.25 | 2.06 | 2.13 | 6.25 | 4.25 |
| 6.00 | 7.50 | 1 | 16 | 2.50 | 2.001 | 1.25 | 2.25 | 2.25 | 1.25 | 2.50 | 2.31 | 2.38 | 7.38 | 4.88 |

[1]NPTF ports are available at no extra charge.
[2]SAE straight thread ports are standard and are indicated by port number.
[3]Diameter CD is Pin Diameter.

### Style BB – Dimensional and Mounting Data

| Bore Ø | Rod No. | MM Rod Ø | WF | Y | Add Stroke | |
|---|---|---|---|---|---|---|
| | | | | | XC | ZC |
| 1.50 | 1 (std.) | 0.625 | 1.00 | 2.00 | 6.38 | 6.88 |
| | 2 | 1.000 | 1.38 | 2.38 | 6.75 | 7.25 |
| 2.00 | 1 (std.) | 1.000 | 1.38 | 2.38 | 7.25 | 8.00 |
| | 2 | 1.375 | 1.63 | 2.63 | 7.50 | 8.25 |
| 2.50 | 1 (std.) | 1.000 | 1.38 | 2.38 | 7.38 | 8.13 |
| | 2 | 1.750 | 1.88 | 2.88 | 7.88 | 8.63 |
| | 3 | 1.375 | 1.63 | 2.63 | 7.63 | 8.38 |
| 3.25 | 1 (std.) | 1.375 | 1.63 | 2.75 | 8.63 | 9.63 |
| | 2 | 2.000 | 2.00 | 3.13 | 9.00 | 10.00 |
| | 3 | 1.750 | 1.88 | 3.00 | 8.88 | 9.88 |
| 4.00 | 1 (std.) | 1.750 | 1.88 | 3.00 | 9.75 | 11.13 |
| | 2 | 2.500 | 2.25 | 3.38 | 10.13 | 11.50 |
| | 3 | 2.000 | 2.00 | 3.13 | 9.88 | 11.25 |
| 5.00 | 1 (std.) | 2.000 | 2.00 | 3.13 | 10.50 | 12.25 |
| | 2 | 3.500 | 2.25 | 3.38 | 10.75 | 12.50 |
| | 3 | 2.500 | 2.25 | 3.38 | 10.75 | 12.50 |
| | 4 | 3.000 | 2.25 | 3.38 | 10.75 | 12.50 |
| 6.00 | 1 (std.) | 2.500 | 2.25 | 3.50 | 12.13 | 14.13 |
| | 2 | 4.000 | 2.25 | 3.50 | 12.13 | 14.13 |
| | 3 | 3.000 | 2.25 | 3.50 | 12.13 | 14.13 |
| | 4 | 3.500 | 2.25 | 3.50 | 12.13 | 14.13 |

View Table of Contents

## Head Trunnion Mounting
Style D
(NFPA Style MT1)

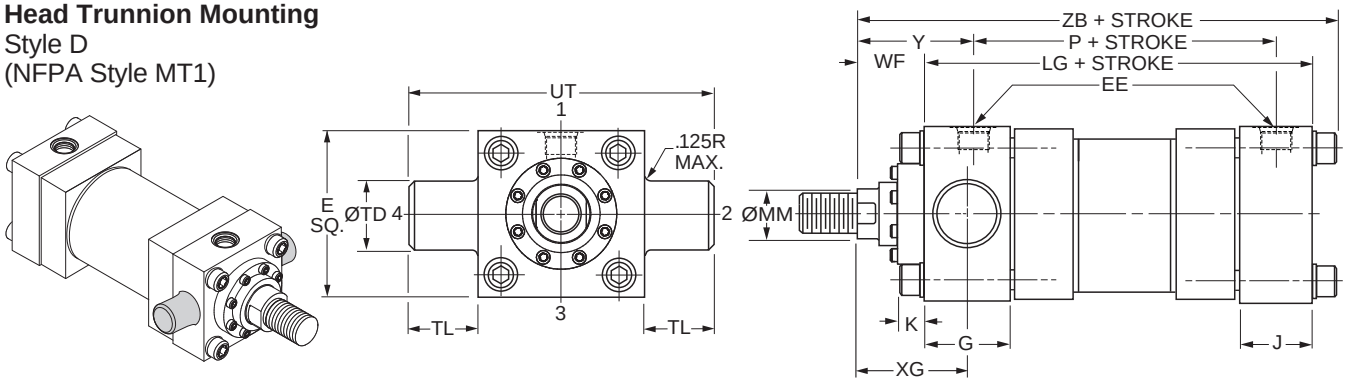


### Style D – Dimensional and Mounting Data

| Bore Ø | E | EE | | G | J | K Max. | TD Ø +.000 -.001 | TL | UT | Add Stroke | |
|---|---|---|---|---|---|---|---|---|---|---|---|
| | | NPTF[1] | SAE[2] | | | | | | | LG | P |
| 1.50 | 2.50 | 1/2 | 10 | 1.75 | 1.50 | 0.50 | 1.000 | 1.00 | 4.50 | 4.63 | 2.88 |
| 2.00 | 3.00 | 1/2 | 10 | 1.75 | 1.50 | 0.67 | 1.375 | 1.38 | 5.75 | 4.63 | 2.88 |
| 2.50 | 3.50 | 1/2 | 10 | 1.75 | 1.50 | 0.67 | 1.375 | 1.38 | 6.25 | 4.75 | 3.00 |
| 3.25 | 4.50 | 3/4 | 12 | 2.00 | 1.75 | 0.83 | 1.750 | 1.75 | 8.00 | 5.50 | 3.50 |
| 4.00 | 5.00 | 3/4 | 12 | 2.00 | 1.75 | 0.83 | 1.750 | 1.75 | 8.50 | 5.75 | 3.75 |
| 5.00 | 6.50 | 3/4 | 12 | 2.00 | 1.75 | 1.11 | 1.750 | 1.75 | 10.00 | 6.25 | 4.25 |
| 6.00 | 7.50 | 1 | 16 | 2.25 | 2.25 | 1.25 | 2.000 | 2.00 | 11.50 | 7.38 | 4.88 |

[1]NPTF ports are available at no extra charge.
[2]SAE straight thread ports are standard and are indicated by port number.

### Style D – Dimensional and Mounting Data

| Bore Ø | Rod No. | MM Rod Ø | WF | XG | Y | Add Stroke ZB Max. |
|---|---|---|---|---|---|---|
| 1.50 | 1 (std.) | 0.625 | 1.00 | 1.88 | 2.00 | 6.13 |
| | 2 | 1.000 | 1.38 | 2.25 | 2.38 | 6.50 |
| 2.00 | 1 (std.) | 1.000 | 1.38 | 2.25 | 2.38 | 6.68 |
| | 2 | 1.375 | 1.63 | 2.50 | 2.63 | 6.92 |
| 2.50 | 1 (std.) | 1.000 | 1.38 | 2.25 | 2.38 | 6.80 |
| | 2 | 1.750 | 1.88 | 2.75 | 2.88 | 7.30 |
| | 3 | 1.375 | 1.63 | 2.50 | 2.63 | 7.05 |
| 3.25 | 1 (std.) | 1.375 | 1.63 | 2.63 | 2.75 | 7.96 |
| | 2 | 2.000 | 2.00 | 3.00 | 3.13 | 8.33 |
| | 3 | 1.750 | 1.88 | 2.88 | 3.00 | 8.21 |
| 4.00 | 1 (std.) | 1.750 | 1.88 | 2.88 | 3.00 | 8.46 |
| | 2 | 2.500 | 2.25 | 3.25 | 3.38 | 8.83 |
| | 3 | 2.000 | 2.00 | 3.00 | 3.13 | 8.58 |
| 5.00 | 1 (std.) | 2.000 | 2.00 | 3.00 | 3.13 | 9.36 |
| | 2 | 3.500 | 2.25 | 3.25 | 3.38 | 9.61 |
| | 3 | 2.500 | 2.25 | 3.25 | 3.38 | 9.61 |
| | 4 | 3.000 | 2.25 | 3.25 | 3.38 | 9.61 |
| 6.00 | 1 (std.) | 2.500 | 2.25 | 3.38 | 3.50 | 10.88 |
| | 2 | 4.000 | 2.25 | 3.38 | 3.50 | 10.88 |
| | 3 | 3.000 | 2.25 | 3.38 | 3.50 | 10.88 |
| | 4 | 3.500 | 2.25 | 3.38 | 3.50 | 10.88 |

View Table of Contents

## Cap Trunnion Mounting
Style DB
(NFPA Style MT2)

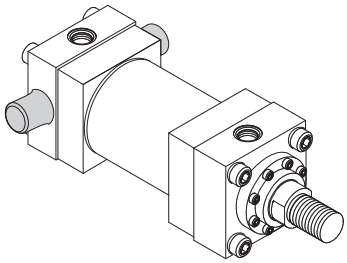

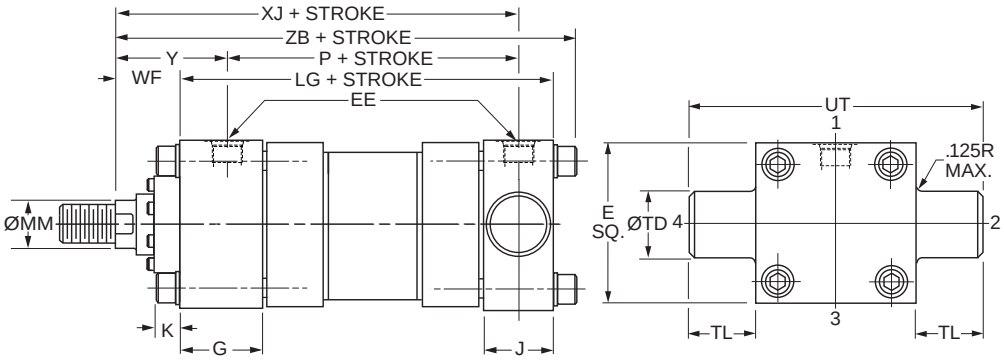


### Style DB – Dimensional and Mounting Data

| Bore Ø | E | EE | | G | J | K Max. | TD Ø +.000 -.001 | TL | UT | Add Stroke | |
|---|---|---|---|---|---|---|---|---|---|---|---|
| | | NPTF[1] | SAE[2] | | | | | | | LG | P |
| 1.50 | 2.50 | 1/2 | 10 | 1.75 | 1.50 | 0.50 | 1.000 | 1.00 | 4.50 | 4.63 | 2.88 |
| 2.00 | 3.00 | 1/2 | 10 | 1.75 | 1.50 | 0.67 | 1.375 | 1.38 | 5.75 | 4.63 | 2.88 |
| 2.50 | 3.50 | 1/2 | 10 | 1.75 | 1.50 | 0.67 | 1.375 | 1.38 | 6.25 | 4.75 | 3.00 |
| 3.25 | 4.50 | 3/4 | 12 | 2.00 | 1.75 | 0.83 | 1.750 | 1.75 | 8.00 | 5.50 | 3.50 |
| 4.00 | 5.00 | 3/4 | 12 | 2.00 | 1.75 | 0.83 | 1.750 | 1.75 | 8.50 | 5.75 | 3.75 |
| 5.00 | 6.50 | 3/4 | 12 | 2.00 | 1.75 | 1.11 | 1.750 | 1.75 | 10.00 | 6.25 | 4.25 |
| 6.00 | 7.50 | 1 | 16 | 2.25 | 2.25 | 1.25 | 2.000 | 2.00 | 11.50 | 7.38 | 4.88 |

[1]NPTF ports are available at no extra charge.
[2]SAE straight thread ports are standard and are indicated by port number.

### Style DB – Dimensional and Mounting Data

| Bore Ø | Rod No. | MM Rod Ø | WF | Y | Add Stroke | |
|---|---|---|---|---|---|---|
| | | | | | XJ | ZB Max. |
| 1.50 | 1 (std.) | 0.625 | 1.00 | 2.00 | 4.88 | 6.13 |
| | 2 | 1.000 | 1.38 | 2.38 | 5.25 | 6.50 |
| 2.00 | 1 (std.) | 1.000 | 1.38 | 2.38 | 5.25 | 6.68 |
| | 2 | 1.375 | 1.63 | 2.63 | 5.50 | 6.92 |
| 2.50 | 1 (std.) | 1.000 | 1.38 | 2.38 | 5.38 | 6.80 |
| | 2 | 1.750 | 1.88 | 2.88 | 5.88 | 7.30 |
| | 3 | 1.375 | 1.63 | 2.63 | 5.63 | 7.05 |
| 3.25 | 1 (std.) | 1.375 | 1.63 | 2.75 | 6.25 | 7.96 |
| | 2 | 2.000 | 2.00 | 3.13 | 6.63 | 8.33 |
| | 3 | 1.750 | 1.88 | 3.00 | 6.50 | 8.21 |
| 4.00 | 1 (std.) | 1.750 | 1.88 | 3.00 | 6.75 | 8.46 |
| | 2 | 2.500 | 2.25 | 3.38 | 7.13 | 8.83 |
| | 3 | 2.000 | 2.00 | 3.13 | 6.88 | 8.58 |
| 5.00 | 1 (std.) | 2.000 | 2.00 | 3.13 | 7.38 | 9.36 |
| | 2 | 3.500 | 2.25 | 3.38 | 7.63 | 9.61 |
| | 3 | 2.500 | 2.25 | 3.38 | 7.63 | 9.61 |
| | 4 | 3.000 | 2.25 | 3.38 | 7.63 | 9.61 |
| 6.00 | 1 (std.) | 2.500 | 2.25 | 3.50 | 8.38 | 10.88 |
| | 2 | 4.000 | 2.25 | 3.50 | 8.38 | 10.88 |
| | 3 | 3.000 | 2.25 | 3.50 | 8.38 | 10.88 |
| | 4 | 3.500 | 2.25 | 3.50 | 8.38 | 10.88 |

View Table of Contents

## Intermediate Fixed Trunnion Mounting

Style DD – 1.50" - 3.25" Bore
(NFPA Style MT4)

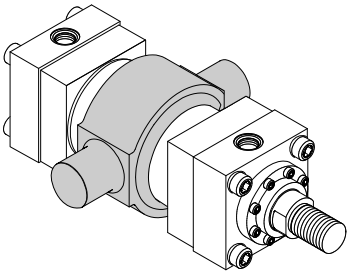

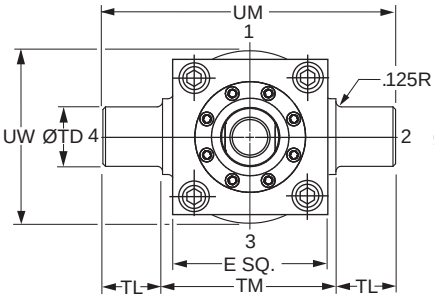


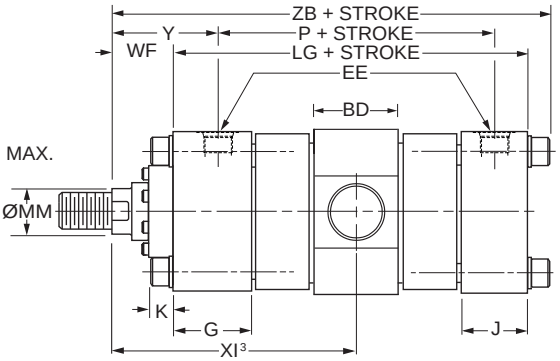


### Style DD & Style DE – Dimensional and Mounting Data

| Bore Ø | BD | E | EE | | G | J | K Max. | TD Ø +.000 -.001 | TL | TM | UM | UW | Add Stroke | |
|---|---|---|---|---|---|---|---|---|---|---|---|---|---|---|
| | | | NPTF[1] | SAE[2] | | | | | | | | | LG | P |
| 1.50 | 1.31 | 2.50 | 1/2 | 10 | 1.75 | 1.50 | 0.50 | 1.000 | 1.00 | 3.00 | 5.00 | 3.00 | 4.63 | 2.88 |
| 2.00 | 1.69 | 3.00 | 1/2 | 10 | 1.75 | 1.50 | 0.67 | 1.375 | 1.38 | 3.50 | 6.25 | 3.50 | 4.63 | 2.88 |
| 2.50 | 1.69 | 3.50 | 1/2 | 10 | 1.75 | 1.50 | 0.67 | 1.375 | 1.38 | 4.00 | 6.75 | 4.00 | 4.75 | 3.00 |
| 3.25 | 2.19 | 4.50 | 3/4 | 12 | 2.00 | 1.75 | 0.83 | 1.750 | 1.75 | 5.00 | 8.50 | 5.00 | 5.50 | 3.50 |
| 4.00 | 2.44 | 5.00 | 3/4 | 12 | 2.00 | 1.75 | 0.83 | 2.000 | 1.75 | 5.50 | 9.00 | 6.00 | 5.75 | 3.75 |
| 5.00 | 2.88 | 6.50 | 3/4 | 12 | 2.00 | 1.75 | 1.11 | 2.500 | 1.75 | 7.00 | 10.50 | 7.38 | 6.25 | 4.25 |
| 6.00 | 3.38 | 7.50 | 1 | 16 | 2.25 | 2.25 | 1.25 | 3.000 | 2.00 | 8.50 | 12.50 | 9.00 | 7.38 | 4.88 |

[1]NPTF ports are available at no extra charge.
[2]SAE straight thread ports are standard and are indicated by port number.

### Style DD & Style DE – Dimensional and Mounting Data

| Bore Ø | Rod No. | MM Rod Ø | WF | Y | Minimum XI[3] | | Min. Stroke | Add Stroke | | |
|---|---|---|---|---|---|---|---|---|---|---|
| | | | | | Styles 4, 8 & 9 | Style 55 | | Maximum XI[4] | | ZB Max |
| | | | | | | | | Styles 4, 8 & 9 | Style 55 | |
| 1.50 | 1 (std.) | 0.625 | 1.00 | 2.00 | 4.81 | 5.63 | 2.88 | 2.00 | 2.75 | 6.13 |
| | 2 | 1.000 | 1.38 | 2.38 | 5.25 | 6.25 | 2.88 | 2.44 | 3.38 | 6.50 |
| 2.00 | 1 (std.) | 1.000 | 1.38 | 2.38 | 5.69 | 6.69 | 3.75 | 1.94 | 2.94 | 6.68 |
| | 2 | 1.375 | 1.63 | 2.63 | 5.94 | 7.06 | 3.75 | 2.19 | 3.31 | 6.92 |
| 2.50 | 1 (std.) | 1.000 | 1.38 | 2.38 | 5.69 | 6.69 | 3.63 | 2.06 | 3.06 | 6.80 |
| | 2 | 1.750 | 1.88 | 2.88 | 6.19 | 7.44 | 3.63 | 2.56 | 3.81 | 7.30 |
| | 3 | 1.375 | 1.63 | 2.63 | 5.94 | 7.06 | 3.63 | 2.31 | 3.44 | 7.05 |
| 3.25 | 1 (std.) | 1.375 | 1.63 | 2.75 | 6.69 | 7.81 | 4.38 | 2.31 | 3.44 | 7.96 |
| | 2 | 2.000 | 2.00 | 3.13 | 7.06 | 8.81 | 4.38 | 2.69 | 4.44 | 8.33 |
| | 3 | 1.750 | 1.88 | 3.00 | 6.94 | 8.19 | 4.38 | 2.56 | 3.81 | 8.21 |
| 4.00 | 1 (std.) | 1.750 | 1.88 | 3.00 | 7.38 | 8.63 | 5.00 | 2.39 | 3.63 | 8.46 |
| | 2 | 2.500 | 2.25 | 3.38 | 7.75 | 10.00 | 5.00 | 2.75 | 5.00 | 8.83 |
| | 3 | 2.000 | 2.00 | 3.13 | 7.50 | 9.25 | 5.00 | 2.50 | 4.25 | 8.58 |
| 5.00 | 1 (std.) | 2.000 | 2.00 | 3.13 | 7.94 | 9.69 | 5.44 | 2.56 | 4.31 | 9.36 |
| | 2 | 3.500 | 2.25 | 3.38 | 8.19 | 11.56 | 5.44 | 2.81 | 6.19 | 9.61 |
| | 3 | 2.500 | 2.25 | 3.38 | 8.19 | 10.44 | 5.44 | 2.81 | 5.00 | 9.61 |
| | 4 | 3.000 | 2.25 | 3.38 | 8.19 | 10.81 | 5.44 | 2.81 | 5.44 | 9.61 |
| 6.00 | 1 (std.) | 2.500 | 2.25 | 3.50 | 9.25 | 11.50 | 6.69 | 2.63 | 4.88 | 10.88 |
| | 2 | 4.000 | 2.25 | 3.50 | 9.25 | 12.75 | 6.69 | 2.63 | 6.13 | 10.88 |
| | 3 | 3.000 | 2.25 | 3.50 | 9.25 | 11.88 | 6.69 | 2.63 | 5.25 | 10.88 |
| | 4 | 3.500 | 2.25 | 3.50 | 9.25 | 12.63 | 6.69 | 2.63 | 6.00 | 10.88 |

[3]Dimension XI to be specified by customer. Reference point for rod end Style 55 is end of piston rod.
[4]Dimensions shown are valid for standard W and WG dimension.

## Heavy Duty Intermediate Fixed Trunnion Mounting

Style DE – 4.00" - 6.00" Bore (NFPA Style MT4)

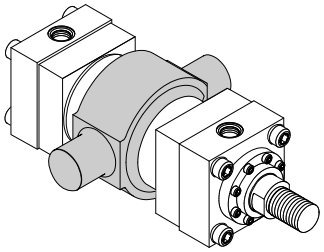

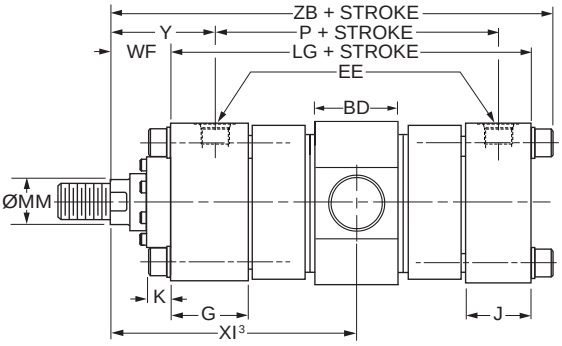


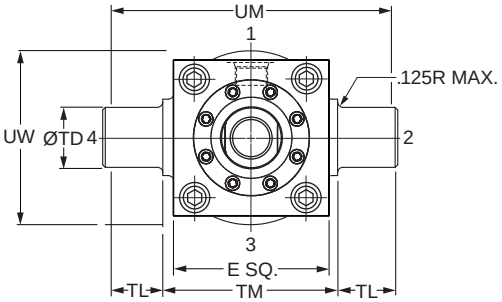

View Table of Contents

## Spherical Bearing Mounting
Style SB

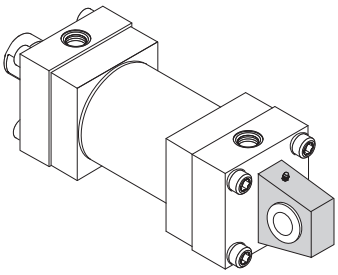

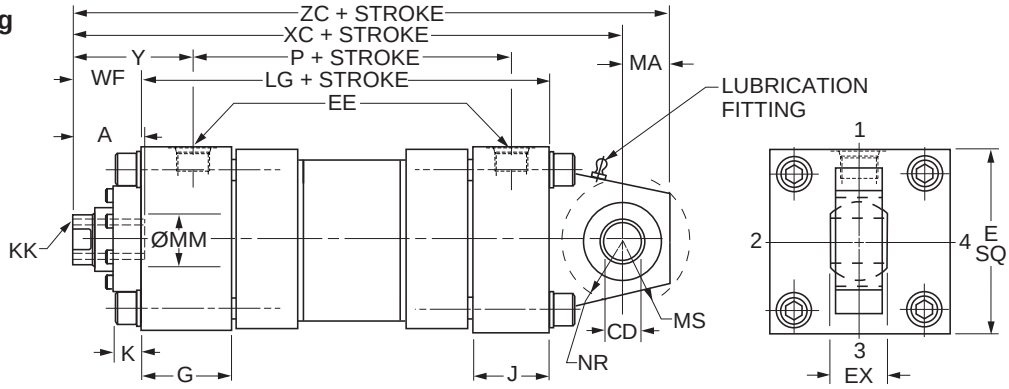


### Style SB – Dimensional and Mounting Data

| Bore Ø | A | CD[1] Ø +0.0000 -0.0005 | E | EE | | EX | G | J | K Max. | MA | MS | NR | Add Stroke | | Maximum Operating psi[2] |
|---|---|---|---|---|---|---|---|---|---|---|---|---|---|---|---|
| | | | | NPTF[1] | SAE[2] | | | | | | | | LG | P | |
| 1.50 | 0.75 | 0.5000 | 2.50 | 1/2 | 10 | 0.44 | 1.75 | 1.50 | 0.50 | 0.75 | 0.94 | 0.63 | 4.63 | 2.88 | 1500 |
| 2.00 | 1.13 | 0.7500 | 3.00 | 1/2 | 10 | 0.66 | 1.75 | 1.50 | 0.67 | 1.00 | 1.38 | 1.00 | 4.63 | 2.88 | 2200 |
| 2.50 | 1.13 | 0.7500 | 3.50 | 1/2 | 10 | 0.66 | 1.75 | 1.50 | 0.67 | 1.00 | 1.38 | 1.00 | 4.75 | 3.00 | 1450 |
| 3.25 | 1.63 | 1.0000 | 4.50 | 3/4 | 12 | 0.88 | 2.00 | 1.75 | 0.83 | 1.25 | 1.69 | 1.25 | 5.50 | 3.50 | 1500 |
| 4.00 | 2.00 | 1.3750 | 5.00 | 3/4 | 12 | 1.19 | 2.00 | 1.75 | 0.83 | 1.88 | 2.44 | 1.63 | 5.75 | 3.75 | 1850 |
| 5.00 | 2.25 | 1.7500 | 6.50 | 3/4 | 12 | 1.53 | 2.00 | 1.75 | 1.11 | 2.50 | 2.88 | 2.06 | 6.25 | 4.25 | 2000 |
| 6.00 | 3.00 | 2.0000 | 7.50 | 1 | 16 | 1.75 | 2.25 | 2.25 | 1.25 | 2.50 | 3.31 | 2.38 | 7.38 | 4.88 | 1800 |

[1] Diameter CD is hole diameter.
[2] Maximum operating pressure at 4:1 design factor is based on tensile strength of material. Pressure ratings are based on standard bearing ratings.

### Style SB – Dimensional and Mounting Data

| Bore Ø | Rod No. | MM Rod Ø | Thread | | WF | Y | Add Stroke | | |
|---|---|---|---|---|---|---|---|---|---|
| | | | Style 9 KK[3] | Style 7 KK[3] | | | XC | XL | ZC |
| 1.50 | 1 (std.) | 0.625 | 7/16-20 | — | 1.00 | 2.00 | 6.38 | 7.25 | 7.13 |
| | 2 | 1.000 | — | 7/16-20 | 1.38 | 2.38 | 6.75 | 7.63 | 7.50 |
| 2.00 | 1 (std.) | 1.000 | 3/4-16 | — | 1.38 | 2.38 | 7.25 | 8.50 | 8.25 |
| | 2 | 1.375 | — | 3/4-16 | 1.63 | 2.63 | 7.50 | 8.75 | 8.50 |
| 2.50 | 1 (std.) | 1.000 | 3/4-16 | — | 1.38 | 2.38 | 7.38 | 8.63 | 8.38 |
| | 2 | 1.750 | — | 3/4-16 | 1.88 | 2.88 | 7.88 | 9.13 | 8.88 |
| | 3 | 1.375 | — | 3/4-16 | 1.63 | 2.63 | 7.63 | 8.88 | 8.63 |
| 3.25 | 1 (std.) | 1.375 | 1-14 | — | 1.63 | 2.75 | 8.63 | 10.50 | 9.88 |
| | 2 | 2.000 | — | 1-14 | 2.00 | 3.13 | 9.00 | 10.88 | 10.25 |
| | 3 | 1.750 | — | 1-14 | 1.88 | 3.00 | 8.88 | 10.75 | 10.13 |
| 4.00 | 1 (std.) | 1.750 | 1 1/4-12 | — | 1.88 | 3.00 | 9.75 | 11.88 | 11.63 |
| | 2 | 2.500 | — | 1 1/4-12 | 2.25 | 3.38 | 10.13 | 12.25 | 12.00 |
| | 3 | 2.000 | — | 1 1/4-12 | 2.00 | 3.13 | 9.88 | 12.00 | 11.75 |
| 5.00 | 1 (std.) | 2.000 | 1 1/2-12 | — | 2.00 | 3.13 | 10.50 | 13.00 | 13.00 |
| | 2 | 3.500 | — | 1 1/2-12 | 2.25 | 3.38 | 10.75 | 13.25 | 13.25 |
| | 3 | 2.500 | — | 1 1/2-12 | 2.25 | 3.38 | 10.75 | 13.25 | 13.25 |
| | 4 | 3.000 | — | 1 1/2-12 | 2.25 | 3.38 | 10.75 | 13.25 | 13.25 |
| 6.00 | 1 (std.) | 2.500 | 1 7/8-12 | — | 2.25 | 3.50 | 12.13 | 14.88 | 14.63 |
| | 2 | 4.000 | — | 1 7/8-12 | 2.25 | 3.50 | 12.13 | 14.88 | 14.63 |
| | 3 | 3.000 | — | 1 7/8-12 | 2.25 | 3.50 | 12.13 | 14.88 | 14.63 |
| | 4 | 3.500 | — | 1 7/8-12 | 2.25 | 3.50 | 12.13 | 14.88 | 14.63 |

[3] Style 9 and Style 7 threads listed are for a spherical rod eye (sold separately) with pin diameter that matches the cap pin.

### Style SB – Recommended maximum swivel angle on each side of the cylinder centerline.

| Bore Ø | Head End Mounted | | Cap End Mounted | |
|---|---|---|---|---|
| | Angle a | Tan. of a | Angle a | Tan. of a |
| 1.50 | 2.00° | .035 | 2.00° | .035 |
| 2.00 | 2.50° | .044 | 4.50° | .079 |
| 2.50 | 2.50° | .044 | 4.50° | .079 |
| 3.25 | 3.00° | .052 | 3.00° | .052 |
| 4.00 | 2.50° | .044 | 3.00° | .052 |
| 5.00 | 3.00° | .052 | 3.00° | .052 |
| 6.00 | 3.00° | .052 | 3.00° | .052 |

Note: Dimension X is the maximum off center mounting of the cylinder. To determine dimension X for various stroke lengths multiply the distance between pivot pin holes by tangent of angle a. For extended position use X = XL + 2X stroke.

### Mounting Information

Head End Mounting

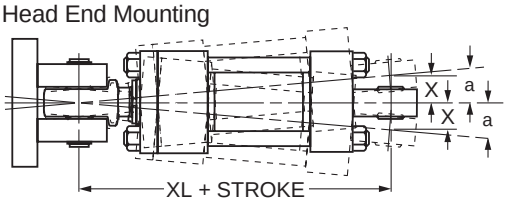


Cap End Mounting

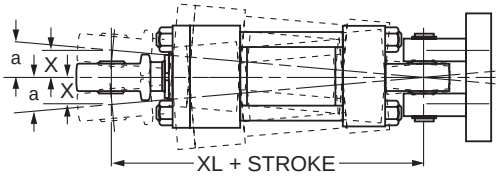

View Table of Contents

## Spherical Bearing Mounting
Style SE

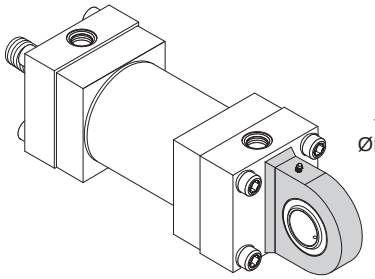

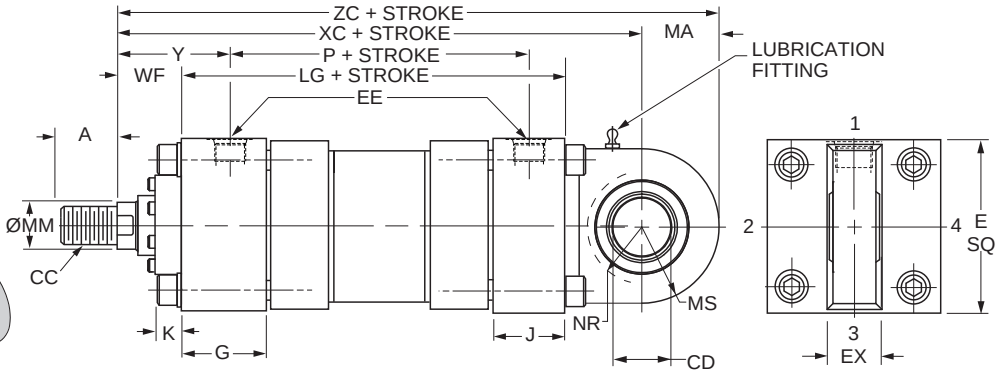


### Style SE – Dimensional and Mounting Data

| Bore Ø | A | CD[1] Ø +0.0000 -0.0005 | E | EE | | EX | G | J | K Max. | MA | MS | NR | Add Stroke | |
|---|---|---|---|---|---|---|---|---|---|---|---|---|---|---|
| | | | | NPTF | SAE | | | | | | | | LG | P |
| 1.50 | 0.75 | 0.7500 | 2.50 | 1/2 | 10 | 0.66 | 1.75 | 1.50 | 0.50 | 1.00 | 1.00 | 0.75 | 4.63 | 2.88 |
| 2.00 | 1.13 | 1.0000 | 3.00 | 1/2 | 10 | 0.88 | 1.75 | 1.50 | 0.67 | 1.25 | 1.25 | 1.00 | 4.63 | 2.88 |
| 2.50 | 1.13 | 1.2500 | 3.50 | 1/2 | 10 | 1.09 | 1.75 | 1.50 | 0.67 | 1.50 | 1.50 | 1.31 | 4.75 | 3.00 |
| 3.25 | 1.63 | 1.5000 | 4.50 | 3/4 | 12 | 1.31 | 2.00 | 1.75 | 0.83 | 2.00 | 2.00 | 1.75 | 5.50 | 3.50 |
| 4.00 | 2.00 | 2.0000 | 5.00 | 3/4 | 12 | 1.75 | 2.00 | 1.75 | 0.83 | 2.25 | 2.25 | 2.13 | 5.75 | 3.75 |
| 5.00 | 2.25 | 2.5000 | 6.50 | 3/4 | 12 | 2.19 | 2.00 | 1.75 | 1.11 | 3.00 | 3.00 | 2.75 | 6.25 | 4.25 |
| 6.00 | 3.00 | 3.0000 | 7.50 | 1 | 16 | 2.63 | 2.25 | 2.25 | 1.25 | 3.50 | 3.50 | 3.13 | 7.38 | 4.88 |

[1] Diameter CD is hole diameter.
[2] Maximum operating pressure at 4:1 design factor is based on tensile strength of material. Pressure ratings are based on standard bearing ratings.

### Style SE – Dimensional and Mounting Data

| Bore Ø | Rod No. | MM Rod Ø | Thread Style 8 CC[3] | A | WF | Y | Add Stroke XC | XL | ZC |
|---|---|---|---|---|---|---|---|---|---|
| 1.50 | 1 (std.) | 0.625 | 1/2-20 | 0.75 | 1.00 | 2.00 | 6.88 | 9.01 | 7.88 |
| | 2 | 1.000 | [3] | [3] | 1.38 | 2.38 | 7.25 | 9.38 | 8.25 |
| 2.00 | 1 (std.) | 1.000 | 7/8-14 | 1.13 | 1.38 | 2.38 | 7.56 | 10.56 | 8.81 |
| | 2 | 1.375 | [3] | [3] | 1.63 | 2.63 | 7.81 | 10.81 | 9.06 |
| 2.50 | 1 (std.) | 1.000 | 7/8-14 | 1.13 | 1.38 | 2.38 | 7.75 | 10.75 | 9.25 |
| | 2 | 1.750 | [3] | [3] | 1.88 | 2.88 | 8.25 | 11.25 | 9.75 |
| | 3 | 1.375 | [3] | [3] | 1.63 | 2.63 | 8.00 | 11.00 | 9.50 |
| 3.25 | 1 (std.) | 1.375 | 1 1/4-12 | 1.63 | 1.63 | 2.75 | 9.25 | 13.38 | 11.25 |
| | 2 | 2.000 | [3] | [3] | 2.00 | 3.13 | 9.63 | 13.75 | 11.63 |
| | 3 | 1.750 | [3] | [3] | 1.88 | 3.00 | 9.50 | 13.63 | 11.50 |
| 4.00 | 1 (std.) | 1.750 | 1 1/2-12 | 2.00 | 1.88 | 3.00 | 10.13 | 15.13 | 12.38 |
| | 2 | 2.500 | [3] | [3] | 2.25 | 3.38 | 10.50 | 15.50 | 12.75 |
| | 3 | 2.000 | [3] | [3] | 2.00 | 3.13 | 10.25 | 15.25 | 12.50 |
| 5.00 | 1 (std.) | 2.000 | 1 3/4-12 | 2.25 | 2.00 | 3.13 | 11.50 | 17.25 | 14.50 |
| | 2 | 3.500 | [3] | [3] | 2.25 | 3.38 | 11.75 | 17.50 | 14.75 |
| | 3 | 2.500 | [3] | [3] | 2.25 | 3.38 | 11.75 | 17.50 | 14.75 |
| | 4 | 3.000 | [3] | [3] | 2.25 | 3.38 | 11.75 | 17.50 | 14.75 |
| 6.00 | 1 (std.) | 2.500 | 2 1/4-12 | 3.00 | 2.25 | 3.50 | 13.38 | 20.38 | 16.88 |
| | 2 | 4.000 | [3] | [3] | 2.25 | 3.50 | 13.38 | 20.38 | 16.88 |
| | 3 | 3.000 | [3] | [3] | 2.25 | 3.50 | 13.38 | 20.38 | 16.88 |
| | 4 | 3.500 | [3] | [3] | 2.25 | 3.50 | 13.38 | 20.38 | 16.88 |

### Style SE – Recommended maximum swivel angle on each side of the cylinder centerline.

| Bore Ø | Head End Mounted Angle a | Head End Mounted Tan. of a | Cap End Mounted Angle a | Cap End Mounted Tan. of a |
|---|---|---|---|---|
| 1.50 | 2.50° | 0.044 | 3.00° | 0.052 |
| 2.00 | 3.00° | 0.052 | 3.00° | 0.052 |
| 2.50 | 3.00° | 0.052 | 3.00° | 0.052 |
| 3.25 | 3.00° | 0.052 | 2.75° | 0.048 |
| 4.00 | 3.00° | 0.052 | 3.00° | 0.052 |
| 5.00 | 3.00° | 0.052 | 3.00° | 0.052 |
| 6.00 | 3.00° | 0.052 | 3.00° | 0.052 |

Note: Dimension X is the maximum off center mounting of the cylinder. To determine dimension X for various stroke lengths multiply the distance between pivot pin holes by tangent of angle a. For extended position use X = XL + 2X stroke.

### Mounting Information

Head End Mounting

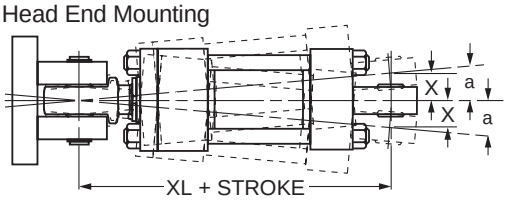


Cap End Mounting

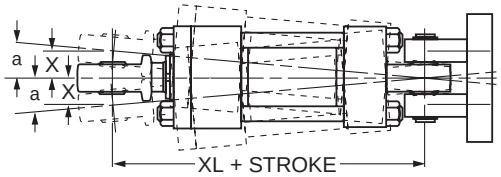


[3] To match pin diameter in rod eye and cap, when an oversize rod is required, specify rod end style '3', 'CC' thread and 'A' thread length for the standard rod diameter (Rod No. 1 for the bore), and 'WF' for the oversize rod. Order the rod eye and clevis bracket for the required bore size from the tables on the Style SE Spherical Bearing Accessories page.

View Table of Contents

## Double Rod Cylinder

Style K

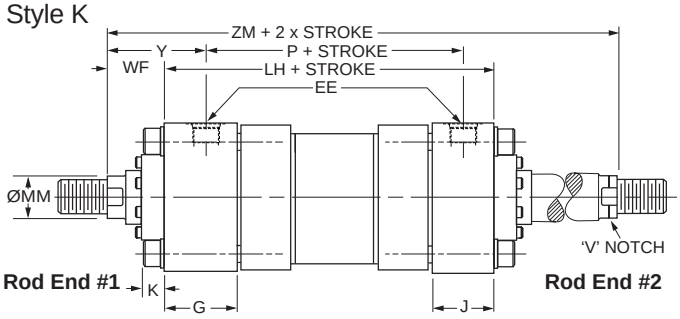


## Double Rod End Mounting Styles

See Mounting Groups page in Section H for guidance on double rod end cylinder mounting style selection.

| Mounting Styles for Single Rod Models | Mounting Styles for Corresponding Double Rod Models[1] | | Dimensions Shown on This Page Supplement Dimensions on 1.50" - 6.00" Bore Pages Listed Below |
|---|---|---|---|
| | Load Connected To Rod On Cylinder Mounting End | Load Connected To Rod Opposite Cylinder Mounting End | |
| T | KT | KT | 92 |
| C | KC | KC | 93 |
| JJ | KJJ | KHH | 94 |
| D | KD | KDB | 97 |
| DD | KDD[2] | KDD[2] | 99 |
| DE | KDE[2] | KDE[2] | 99 |

[1] Connect load to piston rod without 'V' notch. If only one end of the Double Rod Cylinder is to be cushioned, be sure to clearly specify which end this will be.

[2] Specify XI dimension for Styles DD & DE from #1 rod end (without 'V' notch).

## How to Use Double Rod Cylinder Dimension Drawings

To determine dimensions for a double rod cylinder, first refer to the desired single rod mounting style cylinder shown on preceding pages of this catalog. (See table above.) After selecting necessary dimensions from that drawing, return to this page supplement the single rod dimensions with those shown on drawing at right and dimension table below. Note that double rod cylinders have a head (Dim. G) at both ends and that dimension LH replaces LG. The double rod dimensions differ from, or are in addition to those for single rod cylinders shown on preceding pages and provide the information needed to completely dimension a double rod cylinder.

On a double rod cylinder where the two rod ends are different, be sure to clearly state which rod end is to be assembled at which end. Port position 1 is standard. If other than standard, specify pos. 2, 3 or 4 when viewed from rod end #1 only. See port position information in Section H.

| Bore Ø | Rod No. | MM Rod Ø | Add Stroke | | Add 2X Stroke |
|---|---|---|---|---|---|
| | | | LH | SSK | ZM |
| 1.50 | 1 (std.) | 0.625 | 4.88 | 4.13 | 6.88 |
| | 2 | 1.000 | 4.88 | 4.13 | 7.63 |
| 2.00 | 1 (std.) | 1.000 | 4.88 | 3.88 | 7.63 |
| | 2 | 1.375 | 4.88 | 3.88 | 8.13 |
| 2.50 | 1 (std.) | 1.000 | 5.00 | 3.63 | 7.75 |
| | 2 | 1.750 | 5.00 | 3.63 | 8.75 |
| | 3 | 1.375 | 5.00 | 3.63 | 8.25 |
| 3.25 | 1 (std.) | 1.375 | 5.75 | 4.38 | 9.00 |
| | 2 | 2.000 | 5.75 | 4.38 | 9.75 |
| | 3 | 1.750 | 5.75 | 4.38 | 9.50 |
| 4.00 | 1 (std.) | 1.750 | 6.00 | 4.25 | 9.75 |
| | 2 | 2.500 | 6.00 | 4.25 | 10.50 |
| | 3 | 2.000 | 6.00 | 4.25 | 10.00 |
| 5.00 | 1 (std.) | 2.000 | 6.50 | 4.75 | 10.50 |
| | 2 | 3.500 | 6.50 | 4.75 | 11.00 |
| | 3 | 2.500 | 6.50 | 4.75 | 11.00 |
| | 4 | 3.000 | 6.50 | 4.75 | 11.00 |
| 6.00 | 1 (std.) | 2.500 | 7.38 | 5.13 | 11.88 |
| | 2 | 4.000 | 7.38 | 5.13 | 11.88 |
| | 3 | 3.000 | 7.38 | 5.13 | 11.88 |
| | 4 | 3.500 | 7.38 | 5.13 | 11.88 |
| Replaces On single rod mounting styles: | | | LG | SS | – |
| | | | All Mtg. Styles | C | All Mtg. Styles |

## Series 2HB Rod Gland Retention[3]

B = Bolt -On Gland with Circular Retainer
R = Full Square Gland Retainer

| Bore Ø | Rod No. | MM Rod Ø | Mounting Style | |
|---|---|---|---|---|
| | | | HH, C, D, DB, DD, DE, BB, SB, SE | JJ |
| 1.50 | 1 (Std.) | 0.625 | B | B |
| | 2 | 1.000 | R | B |
| 2.00 | 1 (Std.) | 1.000 | B | B |
| | 2 | 1.375 | R | B |
| 2.50 | 1 (Std.) | 1.000 | B | B |
| | 2 | 1.750 | B | B |
| | 3 | 1.375 | B | B |
| 3.25 | All | All | B | B |
| 4.00 | All | All | B | B |
| 5.00 | All | All | B | B |
| 6.00 | All | All | B | B |

[3] Gland retention style may vary when thrust key retainer or gland drain option is included. Contact factory for details.

View Table of Contents

## Rod End Dimensions

**Thread Style 4 (NFPA Style SM)**
**Small Male**

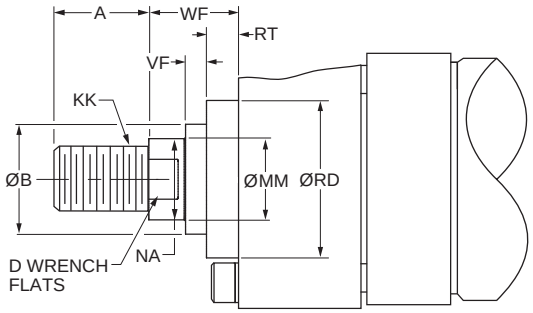


**Thread Style 8 (NFPA Style IM)**
**Intermediate Male**

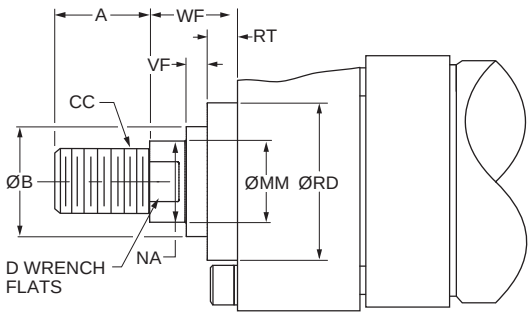


**Thread Style 9[2] (NFPA Style SF)**
**Small Female**

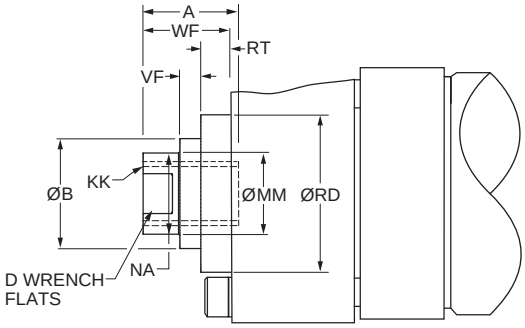


**Thread Style 55[1]**

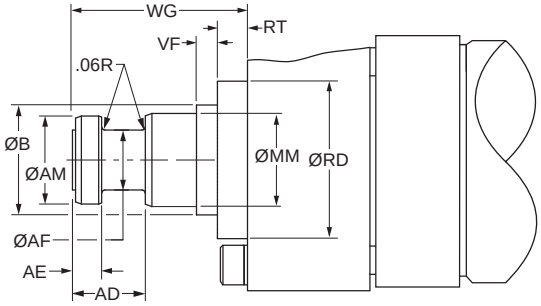


## Rod End Dimensions

| Bore Ø | Rod No. | MM Rod Ø | Thread | | Rod Extensions and Pilot Dimensions | | | | | | | |
|---|---|---|---|---|---|---|---|---|---|---|---|---|
| | | | Style 8 CC | Style 4 & 9 KK | A | B Ø +.000 -.002 | D | NA | VF | RD Ø | RT | WF |
| 7.00 | 1 (std.) | 3.000 | 2 3/4-12 | 2 1/4-12 | 3.50 | 3.749 | 2.63 | 2.88 | 0.40 | 5.26 | 0.85 | 2.25 |
| | 2 | 5.000 | 4 3/4-12 | 3 1/2-12 | 5.00 | 5.749 | -[3] | 4.88 | 0.34 | 7.25 | 0.91 | 2.25 |
| | 3 | 3.500 | 3 1/4-12 | 2 1/2-12 | 3.50 | 4.249 | 3.00 | 3.38 | 0.34 | 5.76 | 0.91 | 2.25 |
| | 4 | 4.000 | 3 3/4-12 | 3-12 | 4.00 | 4.749 | 3.38 | 3.88 | 0.34 | 6.31 | 0.91 | 2.25 |
| | 5 | 4.500 | 4 1/4-12 | 3 1/4-12 | 4.50 | 5.249 | -[3] | 4.38 | 0.34 | 6.94 | 0.91 | 2.25 |
| 8.00 | 1 (std.) | 3.500 | 3 1/4-12 | 2 1/2-12 | 3.50 | 4.249 | 3.00 | 3.38 | 0.34 | 5.76 | 0.91 | 2.25 |
| | 2 | 5.500 | 5 1/4-12 | 4-12 | 5.50 | 6.249 | -[3] | 5.38 | 0.34 | 7.94 | 0.91 | 2.25 |
| | 3 | 4.000 | 3 3/4-12 | 3-12 | 4.00 | 4.749 | 3.38 | 3.88 | 0.34 | 6.31 | 0.91 | 2.25 |
| | 4 | 4.500 | 4 1/4-12 | 3 1/4-12 | 4.50 | 5.249 | -[3] | 4.38 | 0.34 | 6.94 | 0.91 | 2.25 |
| | 5 | 5.000 | 4 3/4-12 | 3 1/2-12 | 5.00 | 5.749 | -[3] | 4.88 | 0.34 | 7.25 | 0.91 | 2.25 |

### "Special" Thread Style 3

Special thread, extension, rod eye, blank, etc., are also available.

To order, specify "Style 3" and give desired dimensions for KK, A, W or WF. If otherwise special, furnish dimensioned sketch.

[1] For special WG dimension, specify "Style 3" and give desired dimension for WG. For other changes, place "S" in the model code, and describe rod end with dimensioned sketch.

[2] Style 9 stroke restrictions may apply. See Style 9 Minimum Stroke Table on How to Order page for details.

[3] These piston rod numbers will have 4 spanner wrench holes instead of wrench flats. See rod drawings on 3H Large Bore Piston Rod Ends page for dimensions.

### Style 55 Rod End

| MM Rod Ø | AD | AE +.001 -.001 | AF Ø | AM Ø | WG[1] |
|---|---|---|---|---|---|
| 3.000 | 2.44 | 0.874 | 2.25 | 2.95 | 4.88 |
| 3.500 | 2.69 | 0.999 | 2.50 | 3.45 | 5.63 |
| 4.000 | 2.69 | 0.999 | 3.00 | 3.95 | 5.75 |
| 4.500 | 3.19 | 1.499 | 3.50 | 4.45 | 6.50 |
| 5.000 | 3.19 | 1.499 | 3.88 | 4.95 | 6.63 |
| 5.500 | 3.94 | 1.874 | 4.38 | 5.45 | 7.50 |

View Table of Contents

## Basic Mounting
Style T
(NFPA Style MX0)

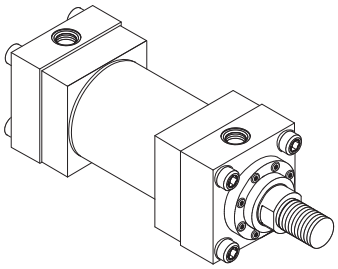

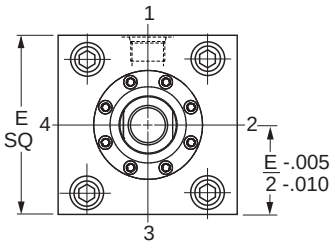


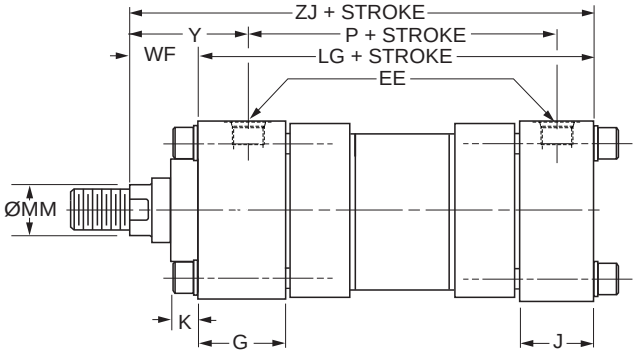


Note: 8.00" bore threaded flanges extend beyond head and cap E square.
See 8.00" Bore Threaded Flange page for details.

### Style T – Dimensional and Mounting Data

| Bore Ø | Rod No. | MM Rod Ø | E | EE | | G | J | K Max. | WF | Y | Add Stroke | | |
|---|---|---|---|---|---|---|---|---|---|---|---|---|---|
| | | | | NPTF[1] | SAE[2] | | | | | | LG | P | ZJ |
| 7.00 | 1 (std.) | 3.000 | 8.50 | 1 1/4 | 20 | 2.75 | 2.75 | 1.44 | 2.25 | 3.69 | 8.50 | 5.63 | 10.75 |
| | 2 | 5.000 | 8.50 | 1 1/4 | 20 | 2.75 | 2.75 | 1.44 | 2.25 | 3.69 | 8.50 | 5.63 | 10.75 |
| | 3 | 3.500 | 8.50 | 1 1/4 | 20 | 2.75 | 2.75 | 1.44 | 2.25 | 3.69 | 8.50 | 5.63 | 10.75 |
| | 4 | 4.000 | 8.50 | 1 1/4 | 20 | 2.75 | 2.75 | 1.44 | 2.25 | 3.69 | 8.50 | 5.63 | 10.75 |
| | 5 | 4.500 | 8.50 | 1 1/4 | 20 | 2.75 | 2.75 | 1.44 | 2.25 | 3.69 | 8.50 | 5.63 | 10.75 |
| 8.00 | 1 (std.) | 3.500 | 9.50 | 1 1/2 | 24 | 3.00 | 3.00 | 1.56 | 2.25 | 3.81 | 9.50 | 6.38 | 11.75 |
| | 2 | 5.500 | 9.50 | 1 1/2 | 24 | 3.00 | 3.00 | 1.56 | 2.25 | 3.81 | 9.50 | 6.38 | 11.75 |
| | 3 | 4.000 | 9.50 | 1 1/2 | 24 | 3.00 | 3.00 | 1.56 | 2.25 | 3.81 | 9.50 | 6.38 | 11.75 |
| | 4 | 4.500 | 9.50 | 1 1/2 | 24 | 3.00 | 3.00 | 1.56 | 2.25 | 3.81 | 9.50 | 6.38 | 11.75 |
| | 5 | 5.000 | 9.50 | 1 1/2 | 24 | 3.00 | 3.00 | 1.56 | 2.25 | 3.81 | 9.50 | 6.38 | 11.75 |

[1]NPTF ports are available at no extra charge. [2]SAE straight thread ports are standard and are indicated by port number.

## Side Lug Mounting
Style C
(NFPA Style MS2)

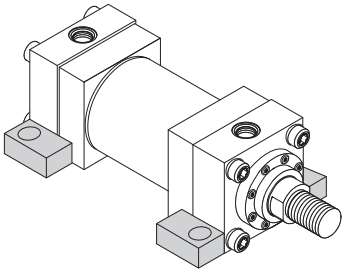

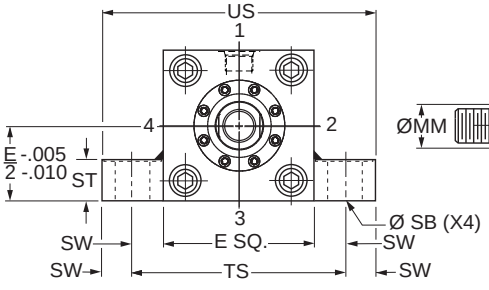


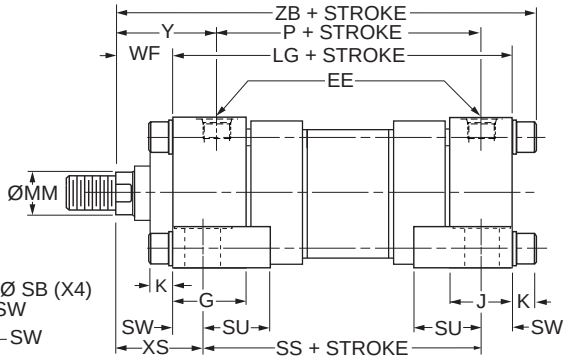


Note: 8.00" bore threaded flanges extend beyond head and cap E square.
See 8.00" Bore Threaded Flange page for details.

### Style C – Dimensional and Mounting Data

| Bore Ø | Rod No. | MM Rod Ø | E | EE | | G | J | K Max. | SB Ø | ST | SU | SW | TS | US | WF | XS | Y | Add Stroke | | | |
|---|---|---|---|---|---|---|---|---|---|---|---|---|---|---|---|---|---|---|---|---|---|
| | | | | NPTF[1] | SAE[2] | | | | | | | | | | | | | LG | P | SS | ZB Max. |
| 7.00 | 1 (std.) | 3.000 | 8.50 | 1 1/4 | 20 | 2.75 | 2.75 | 1.44 | 1.56 | 1.75 | 2.88 | 1.38 | 11.25 | 14.00 | 2.25 | 3.63 | 3.69 | 8.50 | 5.63 | 5.75 | 12.19 |
| | 2 | 5.000 | 8.50 | 1 1/4 | 20 | 2.75 | 2.75 | 1.44 | 1.56 | 1.75 | 2.88 | 1.38 | 11.25 | 14.00 | 2.25 | 3.63 | 3.69 | 8.50 | 5.63 | 5.75 | 12.19 |
| | 3 | 3.500 | 8.50 | 1 1/4 | 20 | 2.75 | 2.75 | 1.44 | 1.56 | 1.75 | 2.88 | 1.38 | 11.25 | 14.00 | 2.25 | 3.63 | 3.69 | 8.50 | 5.63 | 5.75 | 12.19 |
| | 4 | 4.000 | 8.50 | 1 1/4 | 20 | 2.75 | 2.75 | 1.44 | 1.56 | 1.75 | 2.88 | 1.38 | 11.25 | 14.00 | 2.25 | 3.63 | 3.69 | 8.50 | 5.63 | 5.75 | 12.19 |
| | 5 | 4.500 | 8.50 | 1 1/4 | 20 | 2.75 | 2.75 | 1.44 | 1.56 | 1.75 | 2.88 | 1.38 | 11.25 | 14.00 | 2.25 | 3.63 | 3.69 | 8.50 | 5.63 | 5.75 | 12.19 |
| 8.00 | 1 (std.) | 3.500 | 9.50 | 1 1/2 | 24 | 3.00 | 3.00 | 1.56 | 1.56 | 1.75 | 2.88 | 1.38 | 12.25 | 15.00 | 2.25 | 3.63 | 3.81 | 9.50 | 6.38 | 6.75 | 13.31 |
| | 2 | 5.500 | 9.50 | 1 1/2 | 24 | 3.00 | 3.00 | 1.56 | 1.56 | 1.75 | 2.88 | 1.38 | 12.25 | 15.00 | 2.25 | 3.63 | 3.81 | 9.50 | 6.38 | 6.75 | 13.31 |
| | 3 | 4.000 | 9.50 | 1 1/2 | 24 | 3.00 | 3.00 | 1.56 | 1.56 | 1.75 | 2.88 | 1.38 | 12.25 | 15.00 | 2.25 | 3.63 | 3.81 | 9.50 | 6.38 | 6.75 | 13.31 |
| | 4 | 4.500 | 9.50 | 1 1/2 | 24 | 3.00 | 3.00 | 1.56 | 1.56 | 1.75 | 2.88 | 1.38 | 12.25 | 15.00 | 2.25 | 3.63 | 3.81 | 9.50 | 6.38 | 6.75 | 13.31 |
| | 5 | 5.000 | 9.50 | 1 1/2 | 24 | 3.00 | 3.00 | 1.56 | 1.56 | 1.75 | 2.88 | 1.38 | 12.25 | 15.00 | 2.25 | 3.63 | 3.81 | 9.50 | 6.38 | 6.75 | 13.31 |

[1]NPTF ports are available at no extra charge. [2]SAE straight thread ports are standard and are indicated by port number.

View Table of Contents

## Head Rectangular Mounting
Style JJ
(NFPA Style ME5)

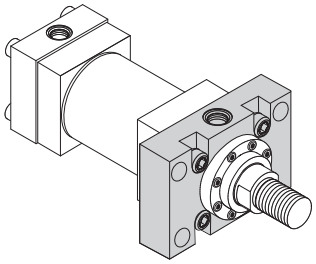

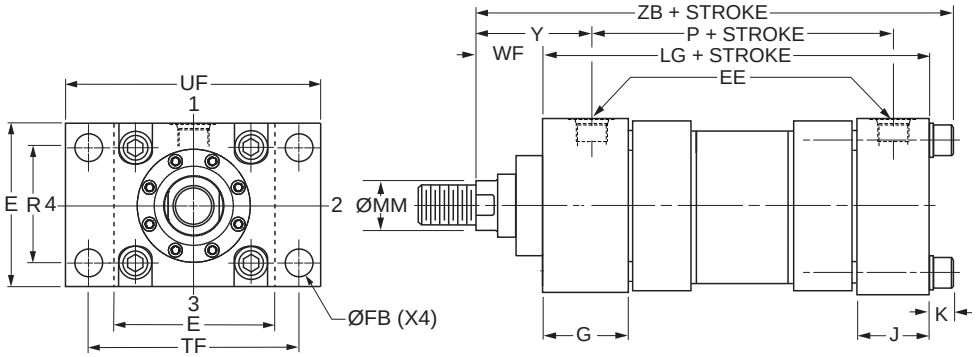


### Style JJ – Dimensional and Mounting Data

Note: 8.00" bore threaded flanges extend beyond head and cap E square. See 8.00" Bore Threaded Flange page for details.

| Bore Ø | Rod No. | MM Rod Ø | E | EE | | FB Ø | G | J | K Max. | R | TF | UF | WF | Y | Add Stroke | | |
|---|---|---|---|---|---|---|---|---|---|---|---|---|---|---|---|---|---|
| | | | | NPTF[1] | SAE[2] | | | | | | | | | | LG | P | ZB Max. |
| 7.00 | 1 (std.) | 3.000 | 8.50 | 1 1/4 | 20 | 1.19 | 2.75 | 2.75 | 1.44 | 6.58 | 10.63 | 12.63 | 2.25 | 3.69 | 8.50 | 5.63 | 12.19 |
| | 2 | 5.000 | 8.50 | 1 1/4 | 20 | 1.19 | 2.75 | 2.75 | 1.44 | 6.58 | 10.63 | 12.63 | 2.25 | 3.69 | 8.50 | 5.63 | 12.19 |
| | 3 | 3.500 | 8.50 | 1 1/4 | 20 | 1.19 | 2.75 | 2.75 | 1.44 | 6.58 | 10.63 | 12.63 | 2.25 | 3.69 | 8.50 | 5.63 | 12.19 |
| | 4 | 4.000 | 8.50 | 1 1/4 | 20 | 1.19 | 2.75 | 2.75 | 1.44 | 6.58 | 10.63 | 12.63 | 2.25 | 3.69 | 8.50 | 5.63 | 12.19 |
| | 5 | 4.500 | 8.50 | 1 1/4 | 20 | 1.19 | 2.75 | 2.75 | 1.44 | 6.58 | 10.63 | 12.63 | 2.25 | 3.69 | 8.50 | 5.63 | 12.19 |
| 8.00 | 1 (std.) | 3.500 | 9.50 | 1 1/2 | 24 | 1.31 | 3.00 | 3.00 | 1.56 | 7.50 | 11.81 | 14.00 | 2.25 | 3.81 | 9.50 | 6.38 | 13.31 |
| | 2 | 5.500 | 9.50 | 1 1/2 | 24 | 1.31 | 3.00 | 3.00 | 1.56 | 7.50 | 11.81 | 14.00 | 2.25 | 3.81 | 9.50 | 6.38 | 13.31 |
| | 3 | 4.000 | 9.50 | 1 1/2 | 24 | 1.31 | 3.00 | 3.00 | 1.56 | 7.50 | 11.81 | 14.00 | 2.25 | 3.81 | 9.50 | 6.38 | 13.31 |
| | 4 | 4.500 | 9.50 | 1 1/2 | 24 | 1.31 | 3.00 | 3.00 | 1.56 | 7.50 | 11.81 | 14.00 | 2.25 | 3.81 | 9.50 | 6.38 | 13.31 |
| | 5 | 5.000 | 9.50 | 1 1/2 | 24 | 1.31 | 3.00 | 3.00 | 1.56 | 7.50 | 11.81 | 14.00 | 2.25 | 3.81 | 9.50 | 6.38 | 13.31 |

[1]NPTF ports are available at no extra charge.
[2]SAE straight thread ports are standard and are indicated by port number.

## Cap Rectangular Mounting
Style HH
(NFPA Style ME6)

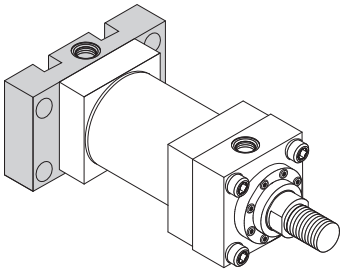

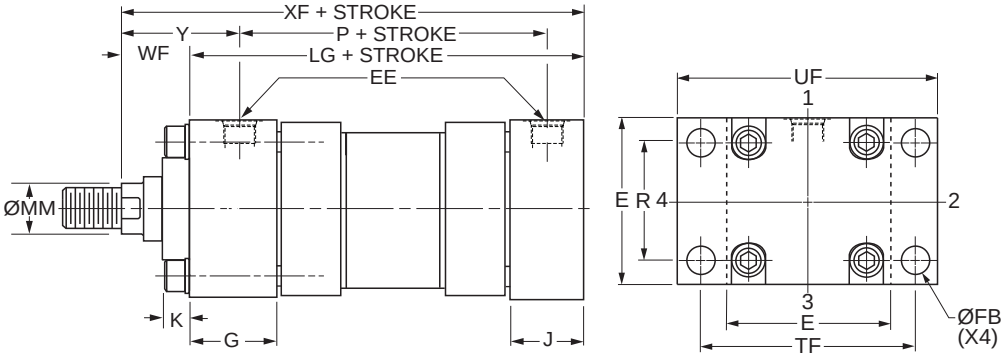


### Style HH – Dimensional and Mounting Data

Note: 8.00" bore threaded flanges extend beyond head and cap E square. See 8.00" Bore Threaded Flange page for details.

| Bore Ø | Rod No | MM Rod Ø | E | EE | | FB Ø | G | J | K Max. | R | TF | UF | WF | Y | Add Stroke | | |
|---|---|---|---|---|---|---|---|---|---|---|---|---|---|---|---|---|---|
| | | | | NPTF[1] | SAE[2] | | | | | | | | | | LG | P | XF |
| 7.00 | 1 (std.) | 3.000 | 8.50 | 1 1/4 | 20 | 1.19 | 2.75 | 2.75 | 1.44 | 6.58 | 10.63 | 12.63 | 2.25 | 3.69 | 8.50 | 5.63 | 10.75 |
| | 2 | 5.000 | 8.50 | 1 1/4 | 20 | 1.19 | 2.75 | 2.75 | 1.44 | 6.58 | 10.63 | 12.63 | 2.25 | 3.69 | 8.50 | 5.63 | 10.75 |
| | 3 | 3.500 | 8.50 | 1 1/4 | 20 | 1.19 | 2.75 | 2.75 | 1.44 | 6.58 | 10.63 | 12.63 | 2.25 | 3.69 | 8.50 | 5.63 | 10.75 |
| | 4 | 4.000 | 8.50 | 1 1/4 | 20 | 1.19 | 2.75 | 2.75 | 1.44 | 6.58 | 10.63 | 12.63 | 2.25 | 3.69 | 8.50 | 5.63 | 10.75 |
| | 5 | 4.500 | 8.50 | 1 1/4 | 20 | 1.19 | 2.75 | 2.75 | 1.44 | 6.58 | 10.63 | 12.63 | 2.25 | 3.69 | 8.50 | 5.63 | 10.75 |
| 8.00 | 1 (std.) | 3.500 | 9.50 | 1 1/2 | 24 | 1.31 | 3.00 | 3.00 | 1.56 | 7.50 | 11.81 | 14.00 | 2.25 | 3.81 | 9.50 | 6.38 | 11.75 |
| | 2 | 5.500 | 9.50 | 1 1/2 | 24 | 1.31 | 3.00 | 3.00 | 1.56 | 7.50 | 11.81 | 14.00 | 2.25 | 3.81 | 9.50 | 6.38 | 11.75 |
| | 3 | 4.000 | 9.50 | 1 1/2 | 24 | 1.31 | 3.00 | 3.00 | 1.56 | 7.50 | 11.81 | 14.00 | 2.25 | 3.81 | 9.50 | 6.38 | 11.75 |
| | 4 | 4.500 | 9.50 | 1 1/2 | 24 | 1.31 | 3.00 | 3.00 | 1.56 | 7.50 | 11.81 | 14.00 | 2.25 | 3.81 | 9.50 | 6.38 | 11.75 |
| | 5 | 5.000 | 9.50 | 1 1/2 | 24 | 1.31 | 3.00 | 3.00 | 1.56 | 7.50 | 11.81 | 14.00 | 2.25 | 3.81 | 9.50 | 6.38 | 11.75 |

[1]NPTF ports are available at no extra charge.
[2]SAE straight thread ports are standard and are indicated by port number.

View Table of Contents

## Cap Fixed Clevis Mounting
Style BB
(NFPA Style MP1)

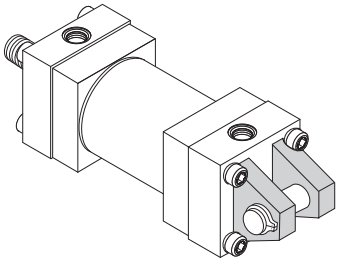

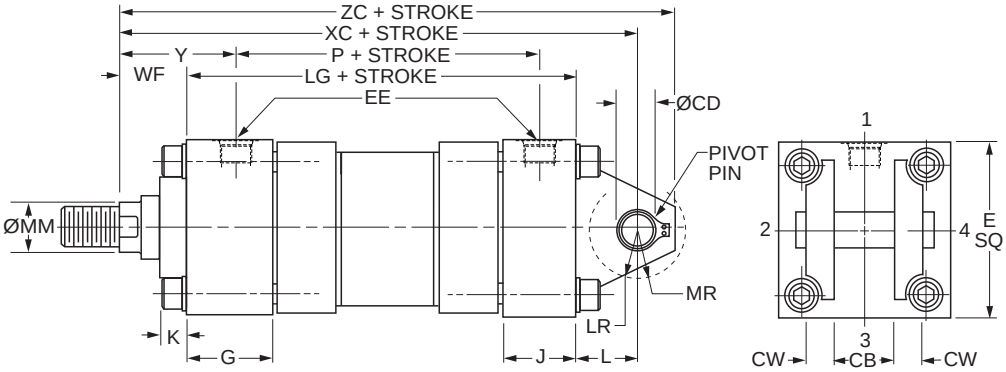


Note: 8.00" bore threaded flanges extend beyond head and cap E square. See 8.00" Bore Threaded Flange page for details.

### Style BB – Dimensional and Mounting Data

| Bore Ø | Rod No. | MM Rod Ø | CB | CD[3] Ø +.000 -.002 | CW | E | EE NPTF[1] | EE SAE[2] | G | J | K Max. | L | LR | MR | WF | Y |
|---|---|---|---|---|---|---|---|---|---|---|---|---|---|---|---|---|
| 7.00 | 1 (std.) | 3.000 | 3.00 | 2.501 | 1.50 | 8.50 | 1 1/4 | 20 | 2.75 | 2.75 | 1.44 | 3.00 | 2.75 | 2.88 | 2.25 | 3.69 |
| | 2 | 5.000 | 3.00 | 2.501 | 1.50 | 8.50 | 1 1/4 | 20 | 2.75 | 2.75 | 1.44 | 3.00 | 2.75 | 2.88 | 2.25 | 3.69 |
| | 3 | 3.500 | 3.00 | 2.501 | 1.50 | 8.50 | 1 1/4 | 20 | 2.75 | 2.75 | 1.44 | 3.00 | 2.75 | 2.88 | 2.25 | 3.69 |
| | 4 | 4.000 | 3.00 | 2.501 | 1.50 | 8.50 | 1 1/4 | 20 | 2.75 | 2.75 | 1.44 | 3.00 | 2.75 | 2.88 | 2.25 | 3.69 |
| | 5 | 4.500 | 3.00 | 2.501 | 1.50 | 8.50 | 1 1/4 | 20 | 2.75 | 2.75 | 1.44 | 3.00 | 2.75 | 2.88 | 2.25 | 3.69 |
| 8.00 | 1 (std.) | 3.500 | 3.00 | 3.001 | 1.50 | 9.50 | 1 1/2 | 24 | 3.00 | 3.00 | 1.56 | 3.25 | 3.25 | 3.13 | 2.25 | 3.81 |
| | 2 | 5.500 | 3.00 | 3.001 | 1.50 | 9.50 | 1 1/2 | 24 | 3.00 | 3.00 | 1.56 | 3.25 | 3.25 | 3.13 | 2.25 | 3.81 |
| | 3 | 4.000 | 3.00 | 3.001 | 1.50 | 9.50 | 1 1/2 | 24 | 3.00 | 3.00 | 1.56 | 3.25 | 3.25 | 3.13 | 2.25 | 3.81 |
| | 4 | 4.500 | 3.00 | 3.001 | 1.50 | 9.50 | 1 1/2 | 24 | 3.00 | 3.00 | 1.56 | 3.25 | 3.25 | 3.13 | 2.25 | 3.81 |
| | 5 | 5.000 | 3.00 | 3.001 | 1.50 | 9.50 | 1 1/2 | 24 | 3.00 | 3.00 | 1.56 | 3.25 | 3.25 | 3.13 | 2.25 | 3.81 |

[1]NPTF ports are available at no extra charge.
[2]SAE straight thread ports are standard and are indicated by port number.
[3]Diameter CD is pin diameter.

### Style BB – Dimensional and Mounting Data

| Bore Ø | Rod No. | MM Rod Ø | Add Stroke LG | Add Stroke P | Add Stroke XC | Add Stroke ZC |
|---|---|---|---|---|---|---|
| 7.00 | 1 (std.) | 3.000 | 8.50 | 5.63 | 13.75 | 16.25 |
| | 2 | 5.000 | 8.50 | 5.63 | 13.75 | 16.25 |
| | 3 | 3.500 | 8.50 | 5.63 | 13.75 | 16.25 |
| | 4 | 4.000 | 8.50 | 5.63 | 13.75 | 16.25 |
| | 5 | 4.500 | 8.50 | 5.63 | 13.75 | 16.25 |
| 8.00 | 1 (std.) | 3.500 | 9.50 | 6.38 | 15.00 | 17.75 |
| | 2 | 5.500 | 9.50 | 6.38 | 15.00 | 17.75 |
| | 3 | 4.000 | 9.50 | 6.38 | 15.00 | 17.75 |
| | 4 | 4.500 | 9.50 | 6.38 | 15.00 | 17.75 |
| | 5 | 5.000 | 9.50 | 6.38 | 15.00 | 17.75 |

View Table of Contents

## Head Trunnion Mounting
Style D
(NFPA Style MT1)

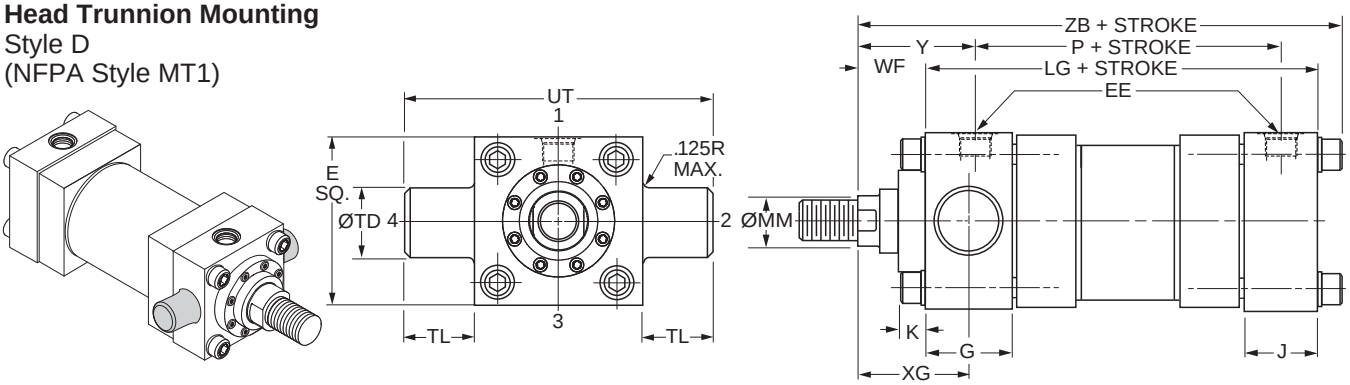


### Style D – Dimensional and Mounting Data

| Bore Ø | Rod No. | MM Rod Ø | E | EE | | G | J | K Max. | TD Ø +.000 -.002 | TL | UT | WF | Y | XG |
|---|---|---|---|---|---|---|---|---|---|---|---|---|---|---|
| | | | | NPTF[1] | SAE[2] | | | | | | | | | |
| 7.00 | 1 (std.) | 3.000 | 8.50 | 1 1/4 | 20 | 2.75 | 2.75 | 1.44 | 2.500 | 2.50 | 13.50 | 2.25 | 3.69 | 3.63 |
| | 2 | 5.000 | 8.50 | 1 1/4 | 20 | 2.75 | 2.75 | 1.44 | 2.500 | 2.50 | 13.50 | 2.25 | 3.69 | 3.63 |
| | 3 | 3.500 | 8.50 | 1 1/4 | 20 | 2.75 | 2.75 | 1.44 | 2.500 | 2.50 | 13.50 | 2.25 | 3.69 | 3.63 |
| | 4 | 4.000 | 8.50 | 1 1/4 | 20 | 2.75 | 2.75 | 1.44 | 2.500 | 2.50 | 13.50 | 2.25 | 3.69 | 3.63 |
| | 5 | 4.500 | 8.50 | 1 1/4 | 20 | 2.75 | 2.75 | 1.44 | 2.500 | 2.50 | 13.50 | 2.25 | 3.69 | 3.63 |

[1]NPTF ports are available at no extra charge.
[2]SAE straight thread ports are standard and are indicated by port number.

### Style D – Dimensional and Mounting Data

| Bore Ø | Rod No. | MM Rod Ø | Add Stroke | | |
|---|---|---|---|---|---|
| | | | LG | P | ZB Max. |
| 7.00 | 1 (std.) | 3.000 | 8.50 | 5.63 | 12.19 |
| | 2 | 5.000 | 8.50 | 5.63 | 12.19 |
| | 3 | 3.500 | 8.50 | 5.63 | 12.19 |
| | 4 | 4.000 | 8.50 | 5.63 | 12.19 |
| | 5 | 4.500 | 8.50 | 5.63 | 12.19 |

View Table of Contents

## Cap Trunnion Mounting
Style DB
(NFPA Style MT2)

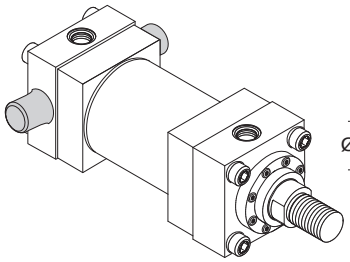

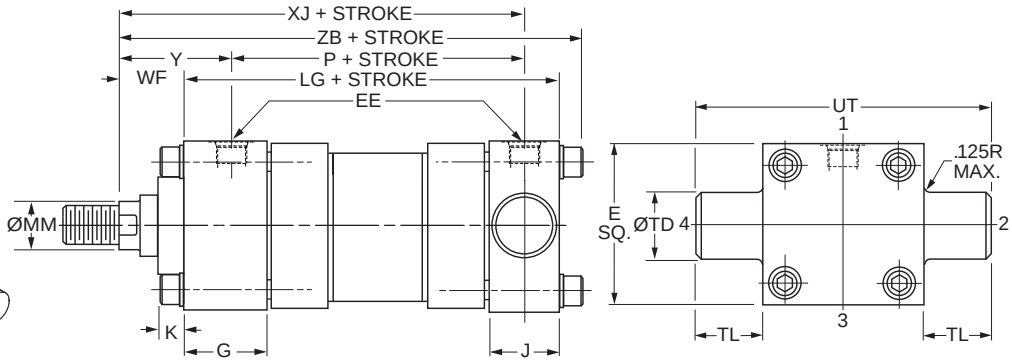


### Style DB – Dimensional and Mounting Data

| Bore Ø | Rod No. | MM Rod Ø | E | EE | | G | J | K Max. | TD Ø +.000 -.002 | TL | UT | WF | Y |
|---|---|---|---|---|---|---|---|---|---|---|---|---|---|
| | | | | NPTF[1] | SAE[2] | | | | | | | | |
| 7.00 | 1 (std.) | 3.000 | 8.50 | 1 1/4 | 20 | 2.75 | 2.75 | 1.44 | 2.500 | 2.50 | 13.50 | 2.25 | 3.69 |
| | 2 | 5.000 | 8.50 | 1 1/4 | 20 | 2.75 | 2.75 | 1.44 | 2.500 | 2.50 | 13.50 | 2.25 | 3.69 |
| | 3 | 3.500 | 8.50 | 1 1/4 | 20 | 2.75 | 2.75 | 1.44 | 2.500 | 2.50 | 13.50 | 2.25 | 3.69 |
| | 4 | 4.000 | 8.50 | 1 1/4 | 20 | 2.75 | 2.75 | 1.44 | 2.500 | 2.50 | 13.50 | 2.25 | 3.69 |
| | 5 | 4.500 | 8.50 | 1 1/4 | 20 | 2.75 | 2.75 | 1.44 | 2.500 | 2.50 | 13.50 | 2.25 | 3.69 |

[1]NPTF ports are available at no extra charge.
[2]SAE straight thread ports are standard and are indicated by port number.



### Style DB – Dimensional and Mounting Data

| Bore Ø | Rod No. | MM Rod Ø | Add Stroke | | | |
|---|---|---|---|---|---|---|
| | | | LG | P | XJ | ZB Max |
| 7.00 | 1 (std.) | 3.000 | 8.50 | 5.63 | 9.38 | 12.19 |
| | 2 | 5.000 | 8.50 | 5.63 | 9.38 | 12.19 |
| | 3 | 3.500 | 8.50 | 5.63 | 9.38 | 12.19 |
| | 4 | 4.000 | 8.50 | 5.63 | 9.38 | 12.19 |
| | 5 | 4.500 | 8.50 | 5.63 | 9.38 | 12.19 |

View Table of Contents

## Heavy Duty Intermediate Fixed Trunnion Mounting

Style DE
(NFPA Current Standard Style MT4)

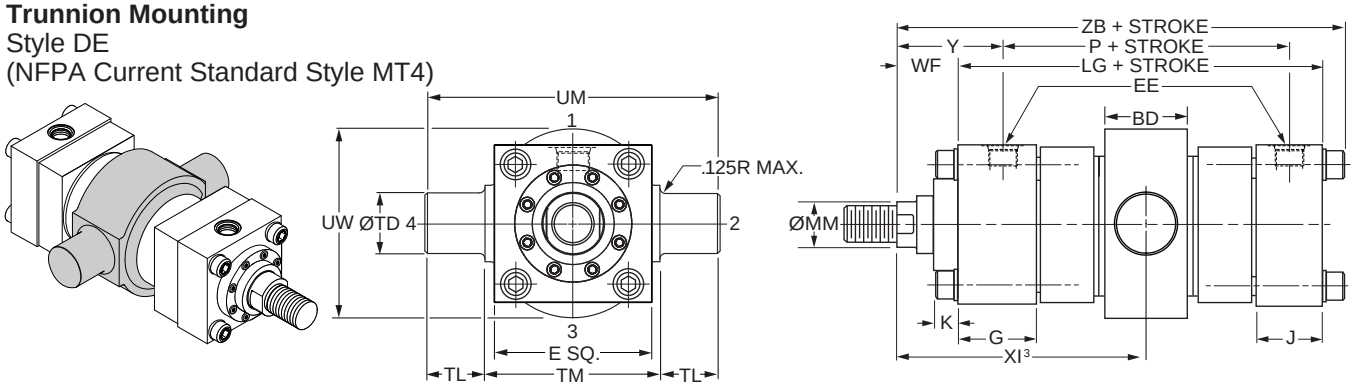


Note: 8.00" bore threaded flanges extend beyond head and cap E square. See 8.00" Bore Threaded Flange page for details.

### Style DE – Dimensional and Mounting Data

| Bore Ø | Rod No. | MM Rod Ø | BD | E | EE NPTF[1] | EE SAE[2] | G | J | K Max. | TD Ø +.000 -.002 | TL | TM | UM | UW | WF | Y |
|---|---|---|---|---|---|---|---|---|---|---|---|---|---|---|---|---|
| 7.00 | 1 (std.) | 3.000 | 3.88 | 8.50 | 1 1/4 | 20 | 2.75 | 2.75 | 1.44 | 3.500 | 2.50 | 9.75 | 14.75 | 10.25 | 2.25 | 3.69 |
| | 2 | 5.000 | 3.88 | 8.50 | 1 1/4 | 20 | 2.75 | 2.75 | 1.44 | 3.500 | 2.50 | 9.75 | 14.75 | 10.25 | 2.25 | 3.69 |
| | 3 | 3.500 | 3.88 | 8.50 | 1 1/4 | 20 | 2.75 | 2.75 | 1.44 | 3.500 | 2.50 | 9.75 | 14.75 | 10.25 | 2.25 | 3.69 |
| | 4 | 4.000 | 3.88 | 8.50 | 1 1/4 | 20 | 2.75 | 2.75 | 1.44 | 3.500 | 2.50 | 9.75 | 14.75 | 10.25 | 2.25 | 3.69 |
| | 5 | 4.500 | 3.88 | 8.50 | 1 1/4 | 20 | 2.75 | 2.75 | 1.44 | 3.500 | 2.50 | 9.75 | 14.75 | 10.25 | 2.25 | 3.69 |
| 8.00 | 1 (std.) | 3.500 | 4.44 | 9.50 | 1 1/2 | 24 | 3.00 | 3.00 | 1.56 | 4.000 | 3.00 | 11.00 | 17.00 | 11.75 | 2.25 | 3.81 |
| | 2 | 5.500 | 4.44 | 9.50 | 1 1/2 | 24 | 3.00 | 3.00 | 1.56 | 4.000 | 3.00 | 11.00 | 17.00 | 11.75 | 2.25 | 3.81 |
| | 3 | 4.000 | 4.44 | 9.50 | 1 1/2 | 24 | 3.00 | 3.00 | 1.56 | 4.000 | 3.00 | 11.00 | 17.00 | 11.75 | 2.25 | 3.81 |
| | 4 | 4.500 | 4.44 | 9.50 | 1 1/2 | 24 | 3.00 | 3.00 | 1.56 | 4.000 | 3.00 | 11.00 | 17.00 | 11.75 | 2.25 | 3.81 |
| | 5 | 5.000 | 4.44 | 9.50 | 1 1/2 | 24 | 3.00 | 3.00 | 1.56 | 4.000 | 3.00 | 11.00 | 17.00 | 11.75 | 2.25 | 3.81 |

[1]NPTF ports are available at no extra charge.
[2]SAE straight thread ports are standard and are indicated by port number.

### Style DE – Dimensional and Mounting Data

| Bore Ø | Rod No. | MM Rod Ø | Style DE Minimum Stroke | Minimum XI[3] Styles 4, 8 & 9 | Minimum XI[3] Style 55 | Add Stroke LG | Add Stroke P | Maximum XI[4] Styles 4, 8 & 9 | Maximum XI[4] Style 55 | ZB Max. |
|---|---|---|---|---|---|---|---|---|---|---|
| 7.00 | 1 (std.) | 3.000 | 8.06 | 10.50 | 13.13 | 8.50 | 5.63 | 2.50 | 5.13 | 12.19 |
| | 2 | 5.000 | 8.06 | 10.50 | 14.88 | 8.50 | 5.63 | 2.50 | 6.88 | 12.19 |
| | 3 | 3.500 | 8.06 | 10.50 | 13.88 | 8.50 | 5.63 | 2.50 | 5.87 | 12.19 |
| | 4 | 4.000 | 8.06 | 10.50 | 14.00 | 8.50 | 5.63 | 2.50 | 6.00 | 12.19 |
| | 5 | 4.500 | 8.06 | 10.50 | 14.75 | 8.50 | 5.63 | 2.50 | 6.75 | 12.19 |
| 8.00 | 1 (std.) | 3.500 | 8.25 | 11.13 | 14.50 | 9.50 | 6.38 | 2.88 | 6.25 | 13.31 |
| | 2 | 5.500 | 8.25 | 11.13 | 16.38 | 9.50 | 6.38 | 2.88 | 8.13 | 13.31 |
| | 3 | 4.000 | 8.25 | 11.13 | 14.63 | 9.50 | 6.38 | 2.88 | 6.39 | 13.31 |
| | 4 | 4.500 | 8.25 | 11.13 | 15.38 | 9.50 | 6.38 | 2.88 | 7.13 | 13.31 |
| | 5 | 5.000 | 8.25 | 11.13 | 15.50 | 9.50 | 6.38 | 2.88 | 7.25 | 13.31 |

[3]Dimension XI to be specified by customer. Reference point for rod end Style 55 is end of piston rod.
[4]Dimensions shown are valid for standard WF and WG dimension.

View Table of Contents

## Spherical Bearing Mounting
Style SE

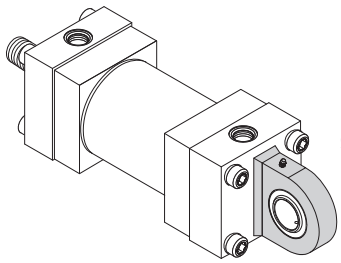

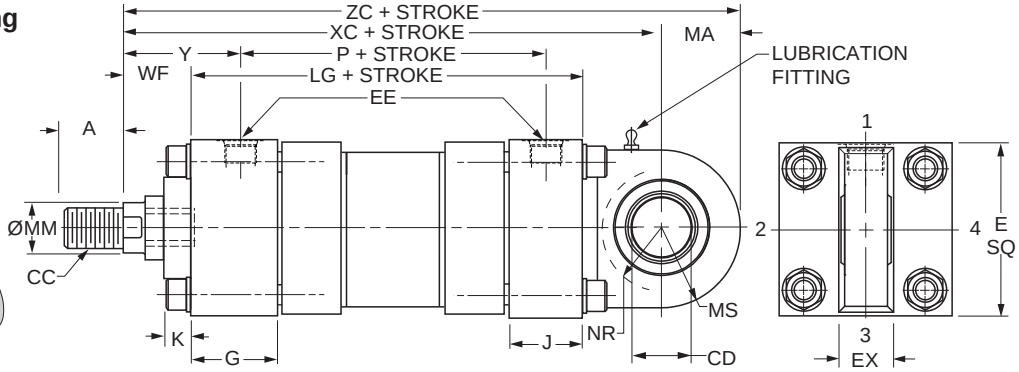


Note: 8.00" bore threaded flanges extend beyond head and cap E square. See 8.00" Bore Threaded Flange page for details.

### Style SE – Dimensional and Mounting Data

| Bore Ø | Rod No. | MM Rod Ø | A | CD[3] Ø +0.0000 -0.0005 | E | EX | EE NPTF[1] | EE SAE[2] | G | J | K Max. | MS | MA | NR | WF | Y |
|---|---|---|---|---|---|---|---|---|---|---|---|---|---|---|---|---|
| 7.00 | 1 (std.) | 3.000 | 3.500 | 3.5000 | 8.50 | 3.06 | 1 1/4 | 20 | 2.75 | 2.75 | 1.44 | 4.00 | 4.00 | 3.68 | 2.25 | 3.69 |
| | 2 | 5.000 | 3.500 | 3.5000 | 8.50 | 3.06 | 1 1/4 | 20 | 2.75 | 2.75 | 1.44 | 4.00 | 4.00 | 3.68 | 2.25 | 3.69 |
| | 3 | 3.500 | 3.500 | 3.5000 | 8.50 | 3.06 | 1 1/4 | 20 | 2.75 | 2.75 | 1.44 | 4.00 | 4.00 | 3.68 | 2.25 | 3.69 |
| | 4 | 4.000 | 3.500 | 3.5000 | 8.50 | 3.06 | 1 1/4 | 20 | 2.75 | 2.75 | 1.44 | 4.00 | 4.00 | 3.68 | 2.25 | 3.69 |
| | 5 | 4.500 | 3.500 | 3.5000 | 8.50 | 3.06 | 1 1/4 | 20 | 2.75 | 2.75 | 1.44 | 4.00 | 4.00 | 3.68 | 2.25 | 3.69 |
| 8.00 | 1 (std.) | 3.500 | 3.500 | 4.0000 | 9.50 | 3.50 | 1 1/2 | 24 | 3.00 | 3.00 | 1.56 | 4.50 | 4.50 | 4.13 | 2.25 | 3.81 |
| | 2 | 5.500 | 3.500 | 4.0000 | 9.50 | 3.50 | 1 1/2 | 24 | 3.00 | 3.00 | 1.56 | 4.50 | 4.50 | 4.13 | 2.25 | 3.81 |
| | 3 | 4.000 | 3.500 | 4.0000 | 9.50 | 3.50 | 1 1/2 | 24 | 3.00 | 3.00 | 1.56 | 4.50 | 4.50 | 4.13 | 2.25 | 3.81 |
| | 4 | 4.500 | 3.500 | 4.0000 | 9.50 | 3.50 | 1 1/2 | 24 | 3.00 | 3.00 | 1.56 | 4.50 | 4.50 | 4.13 | 2.25 | 3.81 |
| | 5 | 5.000 | 3.500 | 4.0000 | 9.50 | 3.50 | 1 1/2 | 24 | 3.00 | 3.00 | 1.56 | 4.50 | 4.50 | 4.13 | 2.25 | 3.81 |

[1]NPTF ports are available at no extra charge.
[2]SAE straight thread ports are standard and are indicated by port number.
[3]Dimension CD is pin diameter.



### Style SE – Dimensional and Mounting Data

| Bore Ø | Rod No. | MM Rod Ø | Thread Style 8 CC[4] | A | Add Stroke LG | Add Stroke P | Add Stroke XC | Add Stroke XL | Add Stroke ZC |
|---|---|---|---|---|---|---|---|---|---|
| 7.00 | 1 (std.) | 3.000 | 2 3/4-12 | 3.50 | 8.50 | 5.63 | 15.25 | 23.25 | 19.25 |
| | 2 | 5.000 | [4] | [4] | 8.50 | 5.63 | 15.25 | 23.25 | 19.25 |
| | 3 | 3.500 | [4] | [4] | 8.50 | 5.63 | 15.25 | 23.25 | 19.25 |
| | 4 | 4.000 | [4] | [4] | 8.50 | 5.63 | 15.25 | 23.25 | 19.25 |
| | 5 | 4.500 | [4] | [4] | 8.50 | 5.63 | 15.25 | 23.25 | 19.25 |
| 8.00 | 1 (std.) | 3.500 | 3 1/4-12 | 3.50 | 9.50 | 6.38 | 16.75 | 25.25 | 21.25 |
| | 2 | 5.500 | [4] | [4] | 9.50 | 6.38 | 16.75 | 25.25 | 21.25 |
| | 3 | 4.000 | [4] | [4] | 9.50 | 6.38 | 16.75 | 25.25 | 21.25 |
| | 4 | 4.500 | [4] | [4] | 9.50 | 6.38 | 16.75 | 25.25 | 21.25 |
| | 5 | 5.000 | [4] | [4] | 9.50 | 6.38 | 16.75 | 25.25 | 21.25 |

[4] To match pin diameter in rod eye and cap, when an oversize rod is required, specify rod end style '3', 'CC' thread and 'A' thread length for the standard rod diameter (Rod No. 1 for the bore), and 'WF' for the oversize rod. Order the rod eye and clevis bracket for the required bore size from the tables on the Style SE Spherical Bearing Accessories page.

### Style SE – Recommended maximum swivel angle on each side of the cylinder centerline.

| Bore Ø | Head End Mounted Angle a | Head End Mounted Tan. of a | Cap End Mounted Angle a | Cap End Mounted Tan. of a |
|---|---|---|---|---|
| 7.00 | 3.00° | 0.052 | 3.00° | 0.052 |
| 8.00 | 3.00° | 0.052 | 3.00° | 0.052 |

Note: Dimension X is the maximum off center mounting of the cylinder. To determine dimension X for various stroke lengths multiply the distance between pivot pin holes by tangent of angle a. For extended position use X = XL + 2X stroke.

### Mounting Information
Head End Mounting

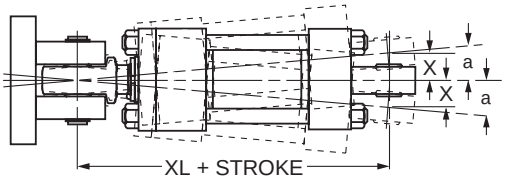


Cap End Mounting

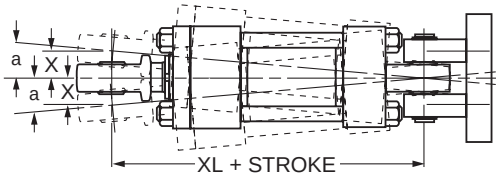

View Table of Contents

## Double Rod Cylinder
Style K

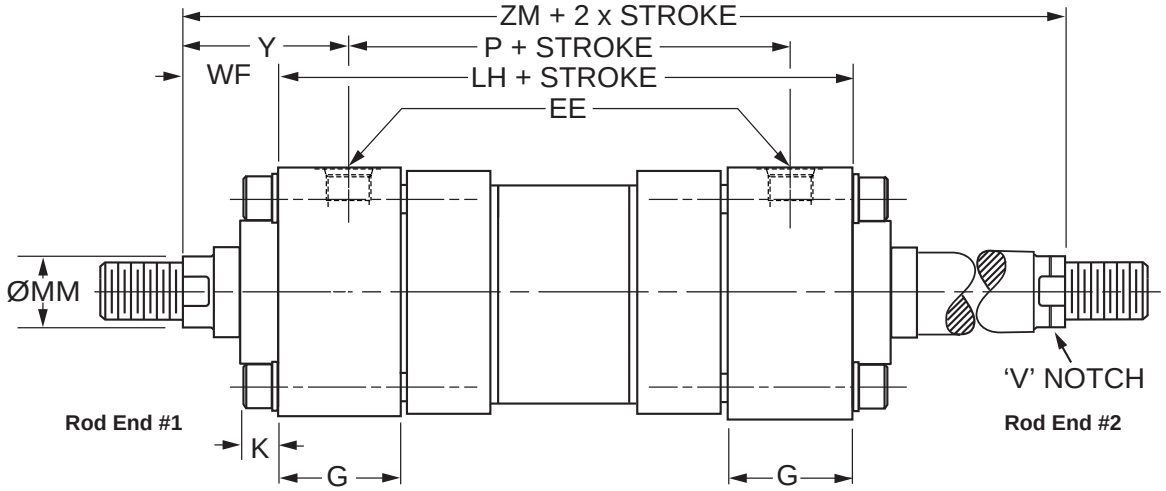


## Double Rod End Mounting Styles

See Mounting Groups page in Section H for guidance on double rod end cylinder mounting style selection.

| Mounting Styles for Single Rod Models | Mounting Styles for Corresponding Double Rod Models[1] | | Dimensions Shown on This Page Supplement Dimensions on 7.00" - 8.00" Bore Pages Listed Below |
|---|---|---|---|
| | Load Connected To Rod On Cylinder Mounting End | Load Connected To Rod Opposite Cylinder Mounting End | |
| C | KC | KC | 104 |
| JJ | KJJ | KHH | 105 |
| D | KD | KDB | 107 |
| DE | KDE[2] | KDE[2] | 109 |

[1] Connect load to piston rod without 'V' notch. If only one end of the Double Rod Cylinder is to be cushioned, be sure to clearly specify which end this will be.

[2] Specify XI dimension for Styles DD & DE from #1 rod end (without 'V' notch).

| Bore Ø | Rod No. | MM Rod Ø | WF | Add Stroke | | Add 2X Stroke |
|---|---|---|---|---|---|---|
| | | | | LH | SSK | ZM |
| 7.00 | 1 (std.) | 3.00 | 2.25 | 8.50 | 5.75 | 13.00 |
| | 2 | 5.00 | 2.25 | 8.50 | 5.75 | 13.00 |
| | 3 | 3.50 | 2.25 | 8.50 | 5.75 | 13.00 |
| | 4 | 4.00 | 2.25 | 8.50 | 5.75 | 13.00 |
| | 5 | 4.50 | 2.25 | 8.50 | 5.75 | 13.00 |
| 8.00 | 1 (std.) | 3.50 | 2.25 | 9.50 | 6.75 | 14.00 |
| | 2 | 5.50 | 2.25 | 9.50 | 6.75 | 14.00 |
| | 3 | 4.00 | 2.25 | 9.50 | 6.75 | 14.00 |
| | 4 | 4.50 | 2.25 | 9.50 | 6.75 | 14.00 |
| | 5 | 5.00 | 2.25 | 9.50 | 6.75 | 14.00 |
| **Replaces On single rod mounting styles:** | | | | **LG** | **SS** | **–** |
| | | | | **All Mtg. Styles** | **C** | **All Mtg. Styles** |

## How to Use Double Rod Cylinder Dimension Drawings

To determine dimensions for a double rod cylinder, first refer to the desired single rod mounting style cylinder shown on preceding pages of this catalog. (See table above.) After selecting necessary dimensions from that drawing, return to this page supplement the single rod dimensions with those shown on drawing at right and dimension table below. Note that double rod cylinders have a head (Dim. G) at both ends and that dimension LH replaces LG. The double rod dimensions differ from, or are in addition to those for single rod cylinders shown on preceding pages and provide the information needed to completely dimension a double rod cylinder.

On a double rod cylinder where the two rod ends are different, be sure to clearly state which rod end is to be assembled at which end. Port position 1 is standard. If other than standard, specify pos. 2, 3 or 4 when viewed from rod end #1 only. See port position information in Section H.

View Table of Contents

## Threaded Flange Dimensions for 8.00" Bore 3HB

Threaded flanges that secure the 8.00” bore 3HB head and cap to the ends of the cylinder body extend beyond the head and cap ‘E’ square. Dimensions of the flange extensions are detailed below.

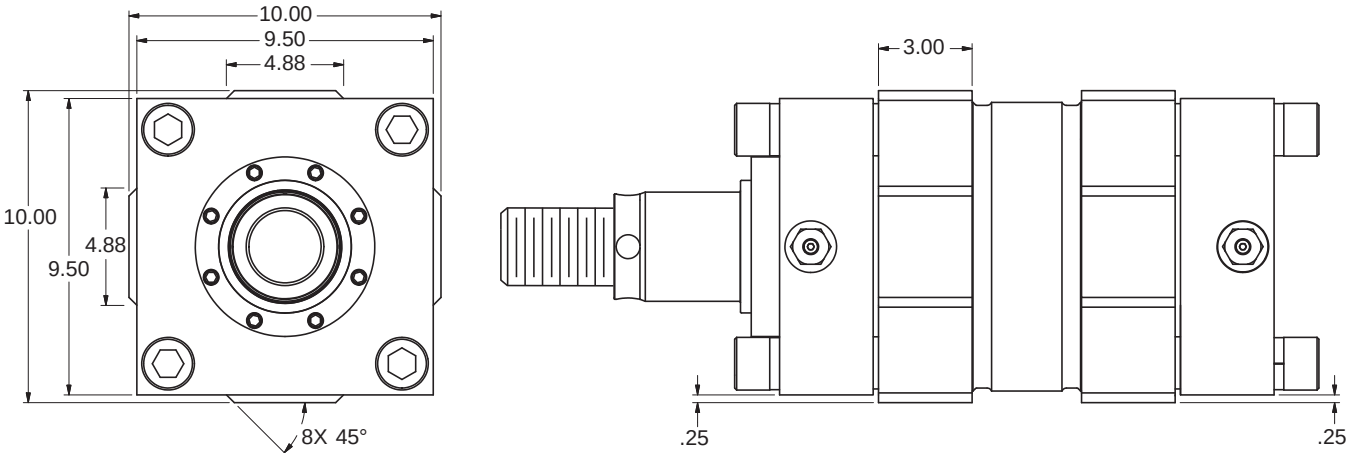




## Suggested Machining for Mounting Series 3HB, 8.00" Bore Style C

To install an 8.00" bore Mounting Style C, Series 3HB cylinder, the extension of the threaded flanges below the mounting lug surface must be considered. The drawings and dimensions below can be used as a suggested guide for preparing the machine mounting surface with slots to accommodate the extensions.

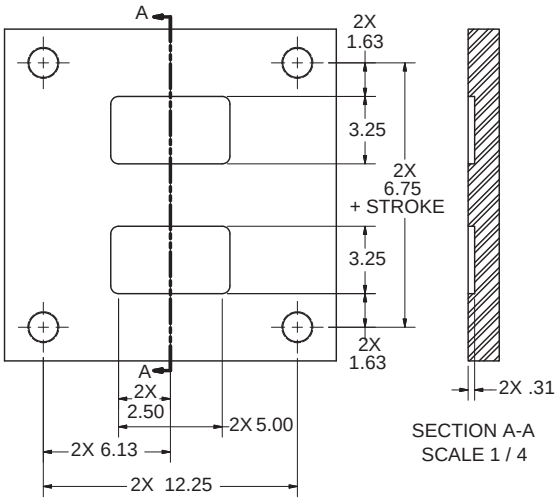


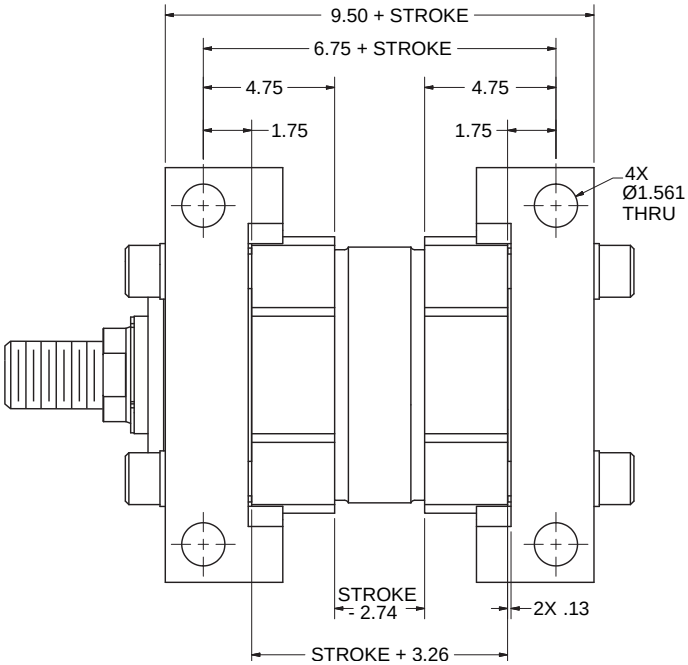

View Table of Contents

# Section E

## Series 3H Large Bore
## Heavy Duty Hydraulic Cylinders


| | |
|---|---|
| Performance | 114 |
| Construction | 115 |
| Specifications, Mounting Styles | 116 |
| Rod End Styles and Dimensions | 117 |
| Model Number | 118-119 |
| TD, TB, TC Mount Dimensions | 120 |
| C Mount Dimensions | 121 |
| JJ Mount Dimensions | 122 |
| JB Mount Dimensions | 123 |
| HH Mount Dimensions | 124 |
| HB Mount Dimensions | 125 |
| BB Mount Dimensions | 126 |
| D Mount Dimensions | 127 |
| DB Mount Dimensions | 128 |
| DD Mount Dimensions | 129 |
| Double Rod Cylinders | 130 |

View Table of Contents

# The large bore, high pressure hydraulic cylinder Parker designed to meet your needs

Parker Series 3H large bore cylinders provide unmatched reliability, performance, and innovative design features that aid in increasing productivity while reducing operating costs.

Parker's externally removable bolt-on gland assembly makes preventive and routine maintenance quick and easy! In many cases, the cylinder does not have to be removed or disassembled to facilitate service. Our innovative design provides for fast turn around, reduced downtime, and increased productivity.

In addition to our removable gland assembly, Series 3H cylinders also include a multitude of innovative design features such as: anti-extrusion body end seals, floating cushions, hi load piston (standard), and various port and rod end options to meet your application requirements.

Every Series 3H cylinder is individually tested before leaving our plant to assure proper and leak free operation. All Series 3H cylinders come with an eighteen month warranty standard.

View Table of Contents

# These innovative design features make Parker Series 3H your best choice...

## for all your large bore heavy duty hydraulic cylinder applications.

**Primary Seal –** PolyPak double-bevel lip design combines ease of installation with rugged construction. The ultimate seal in extra heavy duty applications. Completely self-compensating and self-relieving to withstand pressure variations and conform to mechanical deflection that may occur.

**Piston Rod –** Hard chrome-plated and polished for maximum seal and rod bearing life. Two standard thread styles. Rod end is supplied with spanner wrench holes.

**Align-A-Groove –** A $^{3}/_{16}$" wide surface machined at each end of the cylinder body. Makes precise mounting quick and easy.

**End Seals –** Pressure-actuated cylinder body-to-head and cap "O" rings and back-up washers.

**The Cylinder Body –** Heavy-wall steel tubing is honed to a micro finish bore, providing a wear surface for long lasting piston bearing and seal life.

**Hi-Load Piston Seals** – Are standard.

**Ports –** SAE O-ring straight thread ports are standard.

**Secondary Seal –** Double-Service Wiperseal™ – wipes clean any oil film adhering to the rod on the extend stroke and cleans the rod on the return stroke.

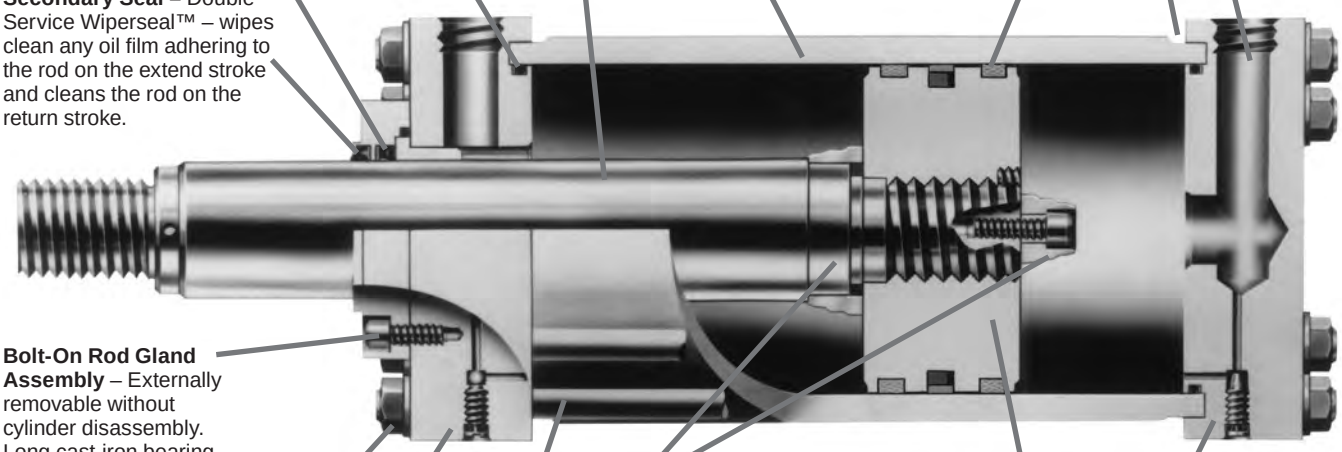

**Bolt-On Rod Gland Assembly** – Externally removable without cylinder disassembly. Long cast-iron bearing surface is inboard of the seals, assuring positive lubrication from within the cylinder. An "O" ring is used as a seal between gland and head.

**Adjustable Floating Stepped Cushions –** For maximum performance. Economical and flexible for even the most demanding applications. Provides superior performance in reducing shock. Cushions are optional and can be supplied at head end, cap end, or both ends without change in envelope or mounting dimensions.

**Steel Cap –** Bored and grooved to provide concentricity for mating parts.

**Alloy Steel Tie Rod Nuts** – With hardened washer.

**Steel Head –** Bored and grooved to provide concentricity for mating parts.

**High Strength Tie Rods –** Made from 100,000 PSI minimum yield steel with rolled threads for added strength.

**One-Piece Nodular Iron Piston –** The wide piston surface contacting cylinder bore reduces bearing loads. One piece design is piloted to piston rod assuring concentricity. Piston is locked with set screw. Anaerobic adhesive and peening of set screw locks and seals piston to rod.

View Table of Contents

## Standard Specifications

- Heavy Duty Service
- Standard Construction – Square Head – Tie Rod Design
- Nominal Pressure – 3000 psi[1]
- Standard Fluid – Hydraulic Oil
- Standard Temperature – -10°F to +165°F[2]
- Bore Sizes – 10.00" through 20.00"
- Piston Rod Diameter – 4.500" through 10.000"
- Mounting Styles – 12 standard styles at various application ratings
- Strokes – Available in any practical stroke length
- Cushions – Optional at either end or both ends of stroke
- Rod Ends – Three Standard Choices – Specials to Order

[1] If hydraulic operating pressure exceeds 3000 psi, send application data for engineering evaluation and recommendation. See Section H for actual design factors.

[2] See Section H for higher temperature service.

*In line with our policy of continuing product improvement, specifications in this catalog are subject to change.*

## Available Mounting Styles

Tie Rods Extended Head End

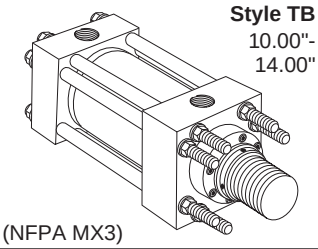

**Style TB**
10.00"-
14.00"
(NFPA MX3)

Tie Rods Extended Cap End

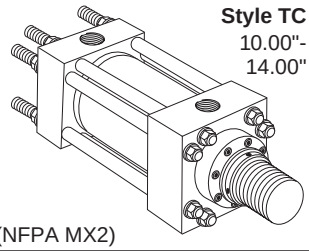

**Style TC**
10.00"-
14.00"
(NFPA MX2)

Tie Rods Extended Both Ends

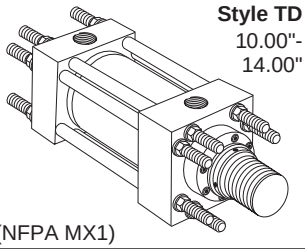

**Style TD**
10.00"-
14.00"
(NFPA MX1)

Head Rectangular

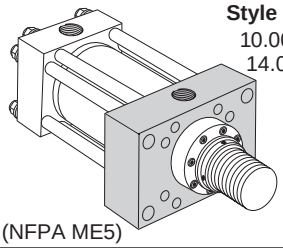

**Style JJ**
10.00"-
14.00"
(NFPA ME5)

Head Square Flange

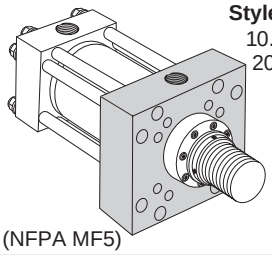

**Style JB**
10.00"-
20.00"
(NFPA MF5)

Cap Rectangular

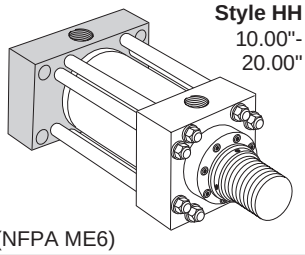

**Style HH**
10.00"-
20.00"
(NFPA ME6)

Cap Square Flange

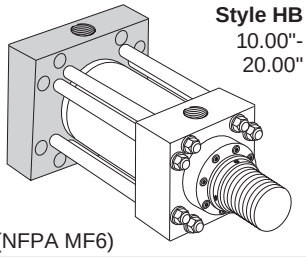

**Style HB**
10.00"-
20.00"
(NFPA MF6)

Side Lug

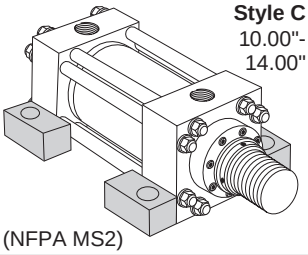

**Style C**
10.00"-
14.00"
(NFPA MS2)

Cap Fixed Clevis

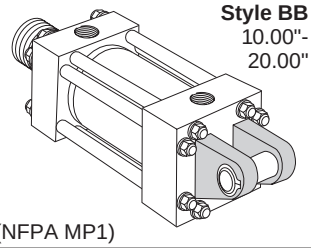

**Style BB**
10.00"-
20.00"
(NFPA MP1)

Head Trunnion

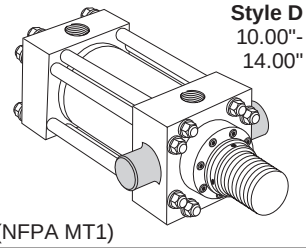

**Style D**
10.00"-
14.00"
(NFPA MT1)

Cap Trunnion

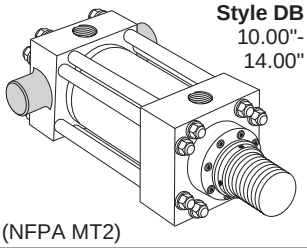

**Style DB**
10.00"-
14.00"
(NFPA MT2)

Intermediate Fixed Trunnion

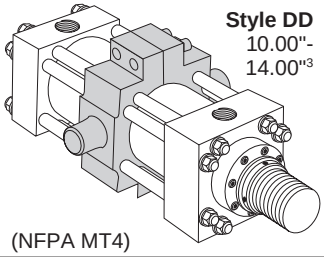

**Style DD**
10.00"-
14.00"[3]
(NFPA MT4)

[3] Consult factory for 16.00"-20.00"

Double Rod Cylinders

**Style KC Shown**

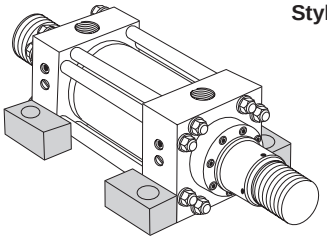

Most of the above illustrated mounting styles are available in double rod cylinders.

View Table of Contents

## Rod End Dimensions – 10.00" - 20.00" Bore

**Thread Style 4 (NFPA Style SM)**
**Small Male**

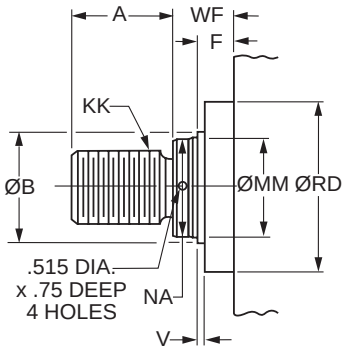


**Thread Style 55[1]**
**Flanged Rod End**

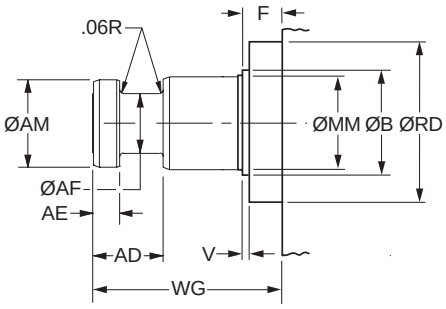


**Thread Style 9[2] (NFPA Style SF)**
**Small Female**

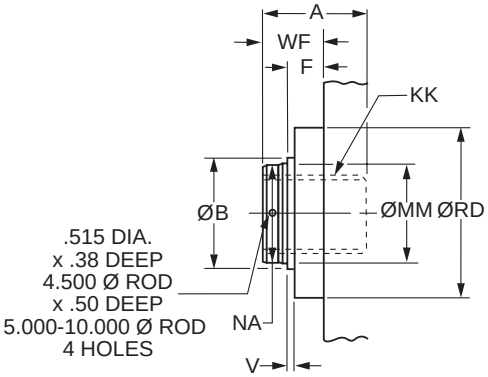


## Rod End Dimensions – 10.00" - 20.00" Bore

| Bore Ø | Rod No. | MM Rod Ø | Thread Style 4 & 9 KK | Rod Extensions and Pilot Dimensions | | | | | | |
|---|---|---|---|---|---|---|---|---|---|---|
| | | | | A | B Ø +.000 -.005 | F | NA | RD | V | WF |
| 10.00 | 1 (std.) | 4.500 | 3 1/4-12 | 4.50 | 5.249 | 1.94 | 4.38 | 8.25 | 0.25 | 2.94 |
| | 2 | 7.000 | 5-12 | 7.00 | 7.999 | 1.94 | 6.88 | 10.50 | 0.38 | 3.50 |
| | 3 | 5.000 | 3 1/2-12 | 5.00 | 5.749 | 1.94 | 4.88 | 8.88 | 0.25 | 3.19 |
| | 4 | 5.500 | 4-12 | 5.50 | 6.249 | 1.94 | 5.38 | 9.38 | 0.25 | 3.19 |
| 12.00 | 1 (std.) | 5.500 | 4-12 | 5.50 | 6.249 | 1.94 | 5.38 | 9.38 | 0.25 | 3.19 |
| | 2 | 8.000 | 5 3/4-12 | 8.00 | 8.999 | 1.94 | 7.88 | 12.50 | 0.38 | 4.00 |
| | 3 | 7.000 | 5-12 | 7.00 | 7.999 | 1.94 | 6.88 | 10.50 | 0.38 | 3.50 |
| 14.00 | 1 (std.) | 7.000 | 5-12 | 7.00 | 7.999 | 1.94 | 6.88 | 10.50 | 0.38 | 3.50 |
| | 2 | 10.000 | 7 1/4-12 | 10.00 | 10.999 | 1.94 | 9.88 | 14.50 | 0.38 | 4.50 |
| | 3 | 8.000 | 5 3/4-12 | 8.00 | 8.999 | 1.94 | 7.88 | 12.50 | 0.38 | 4.00 |
| 16.00 | 1 | 8.000 | 5 3/4-12 | 8.00 | 8.999 | 1.94 | 7.88 | 12.50 | 0.38 | 4.00 |
| | 3 | 9.000 | 6 1/2-12 | 9.00 | 9.999 | 1.94 | 8.88 | 13.50 | 0.38 | 4.25 |
| | 4 | 10.000 | 7 1/4-12 | 10.00 | 10.999 | 1.94 | 9.88 | 14.50 | 0.38 | 4.50 |
| 18.00 | 1 | 9.000 | 6 1/2-12 | 9.00 | 9.999 | 1.94 | 8.88 | 13.50 | 0.38 | 4.25 |
| | 3 | 10.000 | 7 1/4-12 | 10.00 | 10.999 | 1.94 | 9.88 | 14.50 | 0.38 | 4.50 |
| 20.00 | 1 | 10.000 | 7 1/4-12 | 10.00 | 10.999 | 1.94 | 9.88 | 14.50 | 0.38 | 4.50 |

**"Special" Thread Style 3**
Special thread, extension, rod eye, blank, etc., are also available.

To order, specify "Style 3" and give desired dimensions for KK, A & WF. If otherwise special, furnish dimensioned sketch.

[1] For special WG dimension, specify "Style 3" and give desired dimension for WG. For other changes, place "S" in the model code, and describe rod end with dimensioned sketch.

[2] Style 9 stroke restrictions may apply. See Style 9 Minimum Stroke Table on How to Order page for details.

### Style 55 Rod End

| MM Rod Ø | AD | AE +.001 -.001 | AF Ø | AM Ø | WG[1] |
|---|---|---|---|---|---|
| 4.500 | 3.19 | 1.499 | 3.50 | 4.45 | 6.50 |
| 5.000 | 3.19 | 1.499 | 3.88 | 4.95 | 6.63 |
| 5.500 | 3.94 | 1.874 | 4.38 | 5.45 | 7.50 |
| 7.000 | 4.06 | 1.999 | 5.75 | 6.95 | 8.44 |
| 8.000 | 4.06 | 1.999 | 6.50 | 7.95 | 8.69 |
| 9.000 | 4.63 | 2.374 | 7.25 | 8.95 | 8.75 |
| 10.000 | 4.63 | 2.374 | 8.00 | 9.95 | 9.75 |

View Table of Contents

## 3H Large Bore Model Code

| 10.00 | C | K | F | TB | 3H | K | T |
|---|---|---|---|---|---|---|---|
| Bore Dia. | Cushion Head | Double Rod End Cylinder | Mounting Style | Combination Mounts[5] | Series Designator | Piston Seal | Ports |

**Bore Dia.**

Specify bore dia. in inches
10.00
12.00
14.00
16.00
18.00
20.00

**Cushion Head**

Use "C" only if head end cushion is required.

**Double Rod End Cylinder**

Use "K" only if a double rod end cylinder is required.[1]

**Mounting Style**

T = Basic, No Mount
TB = Tie Rods Ext. Head
TC = Tie Rods Ext. Cap
TD = Tie Rods Ext. Both Ends
JB = Head Square Flange
JJ = Head Rectangular
HB = Cap Square Flange
HH = Cap Rectangular
C = Side Lug[2]
BB = Cap Fixed Clevis
D = Head Trunnion
Limited to 10.00" - 14.00" bore
DB = Cap Trunnion
Limited to 10.00" - 14.00" bore
DD = Intermediate Fixed Trunnion[3]
TX = Special Mounting
(Consult Factory)[4]

**Combination Mounts[5]**

Any practical mounting style listed.

**Series Designator**

3H

**Piston Seal**

L = Lip Seal Piston
K = Hi Load Piston (Std.)
C = Ring Packed Piston

**Ports**

T = SAE Straight Thread O-Ring (Std.)
U = NPTF Ports (Dry Seal Pipe Thread)
R = BSP Ports Parallel Thread ISO 228)
P = SAE Flange Ports (3,000 psi)
B = BSPT Ports (Taper Thread)
G = Metric Thread Ports
Y = Metric Thread Ports per ISO 6149

Shaded boxes identify required model number fields.

[1] Available mounting styles for K Type cylinders are located at the end of this section. When ordering a double rod end cylinder, the piston rod number and piston rod end threads are to be specified for both rod ends.

The model number should be created as viewing the primary rod end on the left hand side.

Example: K Type Cylinder:
10.00CKTD3HKT14A29AC10.000

[2] Mounting Style C cylinders should have a minimum stroke length equal to or greater than their bore size.

[3] Specify XI dimension.

[4] Special mounting styles that do not resemble a standard catalog offering will be designated as style TX by the factory. See page 4 for instructions to enter a mounting that resembles a standard style.

[5] In general, the model numbers as read left to right corresponding to the cylinder as viewed from left to right with the primary end at the left. The second or subsequent mountings are mountings called out as they appear in the assembly moving away from the rod end. Except when tie rod extension mountings are part of a combination, all combinations should have a "S" (Special) in the model code and a note in the body of the order clarifying the mounting arrangement.

View Table of Contents

## 3H Large Bore Model Code

| J | S | 1 | 4 | A | C | 16.000 |
|---|---|---|---|---|---|---|
| Common Modification[6] | Special Modification | Piston Rod Number[8] | Piston Rod End | Piston Rod Threads | Cushion Cap | Stroke[7] |

**Common Modification:**
2 = Water Based Fluid Seals
J = High Water Content Fluid Seals
V = Fluorocarbon Seals
X = EPR Seals
E = Fluorocarbon Seals – Piston Rod only

**Special Modification:**
Use only if special modifications are required:
Oversize Ports
Port Position Change
Special Seals
Stop Tube[7]
Stroke Adjusters
Tie Rod Supports

**Piston Rod Number:**
1
2
3
4

**Piston Rod End:**
Select:
Style 4 Small Male
Style 9 Short Female[9]
Style 55 Rod End for Flange Coupling
Style 3 Special (Specify)[10]

**Piston Rod Threads:**
A = UNF Standard
M = Metric[11]
N = No Thread[12]

**Cushion Cap:**
Used only if cushion required

**Stroke:**
Specify in inches

Shaded boxes identify required model number fields.

[6] See common modifications Section G for additional options.

[7] S = Stop Tube. Specify: stop tube length, net stroke and gross stroke. Gross stroke = stop tube length + net stroke. Gross stroke to be placed in the model number field.

Example:

2.000 inches long stop tube
+14.000 inches net stroke
16.000 inches gross stroke

[8] Refer to Rod buckling chart in Section H to assure rod number selected will not buckle under load.

[9] Style 9 stroke restrictions may apply. See Style 9 minimum stroke table for details.

[10] Provide dimensions for KK, A, W or WF. If otherwise special, furnish dimensioned sketch.

[11] See Section G for detailed information regarding standard metric rod end thread sizes.

[12] Must be specified for Piston Rod End Style 55.

### Style 9 Minimum Stroke Table

| Bore Ø | Rod Ø | Minimum Stroke |
|---|---|---|
| 10.00 | 4.500 | 1.125 |
| | 5.000 | 1.375 |
| | 5.500 | 2.000 |
| | 7.000 | 3.125 |
| 12.00 | 5.500 | 1.250 |
| | 7.000 | 2.375 |
| | 8.000 | 3.125 |
| 14.00 | 7.000 | 2.000 |
| | 8.000 | 2.750 |
| | 10.000 | 4.250 |

| Bore Ø | Rod Ø | Minimum Stroke |
|---|---|---|
| 16.00 | 8.000 | 1.750 |
| | 9.000 | 2.500 |
| | 10.000 | 3.250 |
| 18.00 | 9.000 | 1.500 |
| | 10.000 | 2.250 |
| 20.00 | 10.000 | 1.250 |

View Table of Contents

## Tie Rods Extended Both Ends Mounting

Style TD
(NFPA Style MX1)

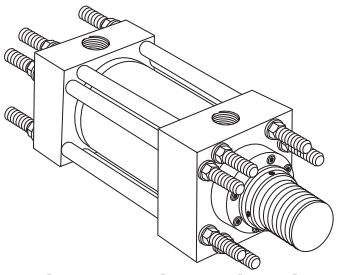

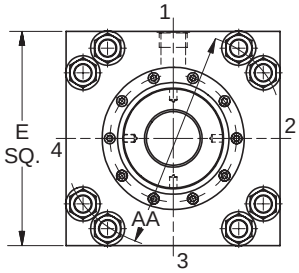


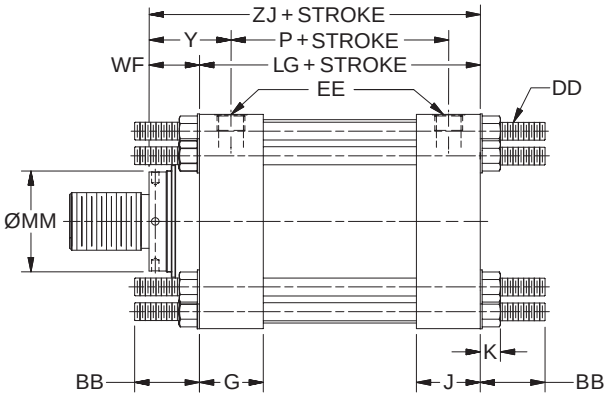


### Style TD – Dimensional and Mounting Data

| Bore Ø | Rod No. | MM Rod Ø | AA | BB | DD | E | EE | | | G | J | K Max. | WF | Y | Add Stroke | | |
|---|---|---|---|---|---|---|---|---|---|---|---|---|---|---|---|---|---|
| | | | | | | | NPTF[1] | SAE Flange Ports[2] | SAE Straight Thread[3] | | | | | | LG | P | ZJ |
| 10.00 | 1 (std.) | 4.500 | 13.00 | 4.13 | 1 1/8-12 | 12.63 | 2.00 | 2.00 | 24 | 3.69 | 3.69 | 1.17 | 2.94 | 4.75 | 12.13 | 8.50 | 15.06 |
| | 2 | 7.000 | 13.00 | 4.13 | 1 1/8-12 | 12.63 | 2.00 | 2.00 | 24 | 3.69 | 3.69 | 1.17 | 3.50 | 5.31 | 12.13 | 8.50 | 15.63 |
| | 3 | 5.000 | 13.00 | 4.13 | 1 1/8-12 | 12.63 | 2.00 | 2.00 | 24 | 3.69 | 3.69 | 1.17 | 3.19 | 5.00 | 12.13 | 8.50 | 15.31 |
| | 4 | 5.500 | 13.00 | 4.13 | 1 1/8-12 | 12.63 | 2.00 | 2.00 | 24 | 3.69 | 3.69 | 1.17 | 3.19 | 5.00 | 12.13 | 8.50 | 15.31 |
| 12.00 | 1 (std.) | 5.500 | 15.50 | 4.50 | 1 1/4-12 | 14.88 | 2.50 | 2.50[4] | 24 | 4.44 | 4.44 | 1.30 | 3.19 | 5.38 | 14.50 | 10.13 | 17.69 |
| | 2 | 8.000 | 15.50 | 4.50 | 1 1/4-12 | 14.88 | 2.50 | 2.50[4] | 24 | 4.44 | 4.44 | 1.30 | 4.00 | 6.19 | 14.50 | 10.13 | 18.50 |
| | 3 | 7.000 | 15.50 | 4.50 | 1 1/4-12 | 14.88 | 2.50 | 2.50[4] | 24 | 4.44 | 4.44 | 1.30 | 3.50 | 5.69 | 14.50 | 10.13 | 18.00 |
| 14.00 | 1 (std.) | 7.000 | 17.38 | 4.50 | 1 1/4-12 | 17.13 | 2.50 | 2.50[4] | 24 | 4.88 | 4.88 | 1.30 | 3.50 | 5.88 | 15.63 | 10.88 | 19.13 |
| | 2 | 10.000 | 17.38 | 4.50 | 1 1/4-12 | 17.13 | 2.50 | 2.50[4] | 24 | 4.88 | 4.88 | 1.30 | 4.50 | 6.88 | 15.63 | 10.88 | 20.13 |
| | 3 | 8.000 | 17.38 | 4.50 | 1 1/4-12 | 17.13 | 2.50 | 2.50[4] | 24 | 4.88 | 4.88 | 1.30 | 4.00 | 6.38 | 15.63 | 10.88 | 19.63 |

[1] NPTF ports are available at no extra charge.
[2] Optional SAE flange ports may be specified – flange to be supplied by customer. See Optional SAE Flange Port Pattern table for dimensions.
[3] SAE straight thread ports are standard and are indicated by port number.
[4] 2.50 SAE flange port is rated at 2500 psi

### Optional SAE Flange Port Pattern

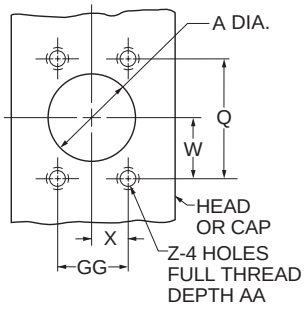


| Nom. Flange Size | A | Q | GG | W | X | Z-THD UNC-2B | AA Min. | SAE |
|---|---|---|---|---|---|---|---|---|
| 2 | 2.00 | 3.062 | 1.688 | 1.53 | 0.84 | 1/2-13 | 1.06 | 32 |
| 2 1/2 | 2.50 | 3.500 | 2.000 | 1.75 | 1.00 | 1/2-13 | 1.19 | 40 |

### Style TD – Tie Rod Information

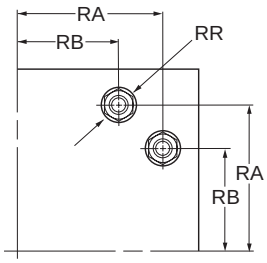


10.00", 12.00" Bores

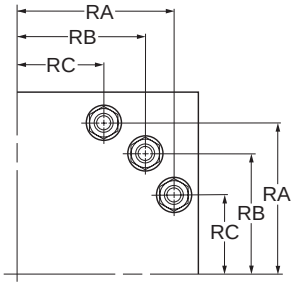


14.00" Bore

| Bore Ø | 10.00 | 12.00 | 14.00 |
|---|---|---|---|
| Tie Rod Thread | 1 1/8-12 | 1 1/4-12 | 1 1/4-12 |
| RA | 5.291 | 6.270 | 7.485 |
| RB | 3.775 | 4.555 | 6.143 |
| RC | — | — | 4.409 |
| RR | 2.00 | 2.19 | 2.19 |

### Style TB

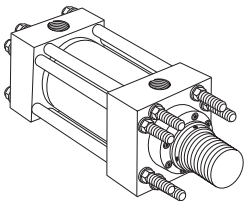

### Style TC

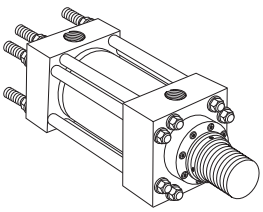

Dimensions for TB and TC Mount may be obtained from the above dimensional table.

View Table of Contents

## Side Lugs Mounting
Style C
(NFPA Style MS2)

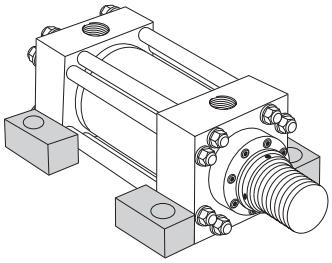

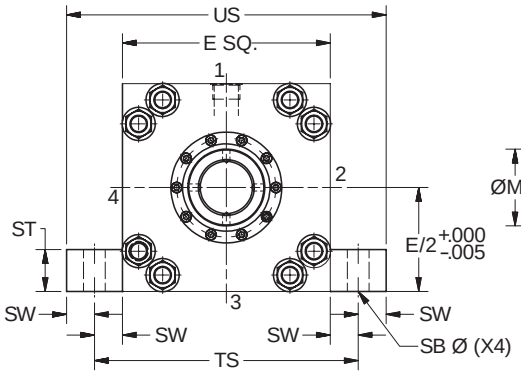


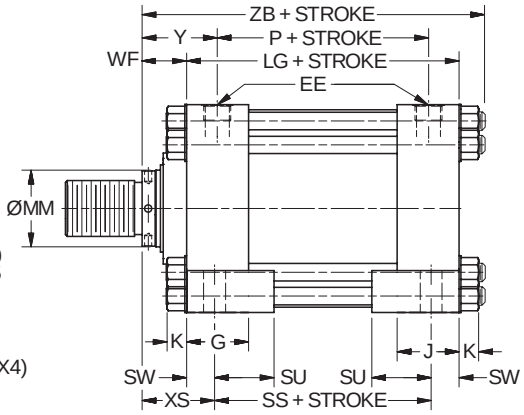


### Style C – Dimensional and Mounting Data

| Bore Ø | Rod No. | MM Rod Ø | E | Ports (EE) NPTF[1] | Ports (EE) SAE Flange Port[2] | Ports (EE) SAE Straight Thread Port[3] | G | J | K Max. | SB Ø | ST | SU | SW | Y | TS | US | WF | XS |
|---|---|---|---|---|---|---|---|---|---|---|---|---|---|---|---|---|---|---|
| 10.00 | 1 (std.) | 4.500 | 12.63 | 2.00 | 2.00 | 24 | 3.69 | 3.69 | 1.17 | 1.563 | 2.25 | 3.50 | 1.63 | 4.75 | 15.88 | 19.13 | 2.94 | 4.56 |
| | 2 | 7.000 | 12.63 | 2.00 | 2.00 | 24 | 3.69 | 3.69 | 1.17 | 1.563 | 2.25 | 3.50 | 1.63 | 5.31 | 15.88 | 19.13 | 3.50 | 5.13 |
| | 3 | 5.000 | 12.63 | 2.00 | 2.00 | 24 | 3.69 | 3.69 | 1.17 | 1.563 | 2.25 | 3.50 | 1.63 | 5.00 | 15.88 | 19.13 | 3.19 | 4.81 |
| | 4 | 5.500 | 12.63 | 2.00 | 2.00 | 24 | 3.69 | 3.69 | 1.17 | 1.563 | 2.25 | 3.50 | 1.63 | 5.00 | 15.88 | 19.13 | 3.19 | 4.81 |
| 12.00 | 1 (std.) | 5.500 | 14.88 | 2.50 | 2.50[4] | 24 | 4.44 | 4.44 | 1.30 | 1.563 | 3.00 | 4.25 | 2.00 | 5.38 | 18.88 | 22.88 | 3.19 | 5.19 |
| | 2 | 8.000 | 14.88 | 2.50 | 2.50[4] | 24 | 4.44 | 4.44 | 1.30 | 1.563 | 3.00 | 4.25 | 2.00 | 6.19 | 18.88 | 22.88 | 4.00 | 6.00 |
| | 3 | 7.000 | 14.88 | 2.50 | 2.50[4] | 24 | 4.44 | 4.44 | 1.30 | 1.563 | 3.00 | 4.25 | 2.00 | 5.69 | 18.88 | 22.88 | 3.50 | 5.50 |
| 14.00 | 1 (std.) | 7.000 | 17.13 | 2.50 | 2.50[4] | 24 | 4.88 | 4.88 | 1.30 | 2.313 | 4.00 | 4.75 | 2.25 | 5.88 | 21.63 | 26.13 | 3.50 | 5.75 |
| | 2 | 10.000 | 17.13 | 2.50 | 2.50[4] | 24 | 4.88 | 4.88 | 1.30 | 2.313 | 4.00 | 4.75 | 2.25 | 6.88 | 21.63 | 26.13 | 4.50 | 6.75 |
| | 3 | 8.000 | 17.13 | 2.50 | 2.50[4] | 24 | 4.88 | 4.88 | 1.30 | 2.313 | 4.00 | 4.75 | 2.25 | 6.38 | 21.63 | 26.13 | 4.00 | 6.25 |

[1]NPTF ports are available at no extra charge.
[2]Optional SAE flange ports may be specified – flange to be supplied by customer. See Optional SAE Flange Port Pattern table for dimensions.
[3]SAE straight thread ports are standard and are indicated by port number.
[4] 2.50 SAE flange port is rated at 2500 psi

### Style C – Dimensional and Mounting Data (cont.)

| Bore Ø | Rod No. | MM Rod Ø | Add Stroke LG | Add Stroke P | Add Stroke SS | Add Stroke ZB Max. |
|---|---|---|---|---|---|---|
| 10.00 | 1 (std.) | 4.500 | 12.13 | 8.50 | 8.88 | 16.49 |
| | 2 | 7.000 | 12.13 | 8.50 | 8.88 | 17.05 |
| | 3 | 5.000 | 12.13 | 8.50 | 8.88 | 16.74 |
| | 4 | 5.500 | 12.13 | 8.50 | 8.88 | 16.74 |
| 12.00 | 1 (std.) | 5.500 | 14.50 | 10.13 | 10.50 | 19.24 |
| | 2 | 8.000 | 14.50 | 10.13 | 10.50 | 20.05 |
| | 3 | 7.000 | 14.50 | 10.13 | 10.50 | 19.55 |
| 14.00 | 1 (std.) | 7.000 | 15.63 | 10.88 | 11.13 | 20.68 |
| | 2 | 10.000 | 15.63 | 10.88 | 11.13 | 21.68 |
| | 3 | 8.000 | 15.63 | 10.88 | 11.13 | 21.18 |

### Optional SAE Flange Port Pattern

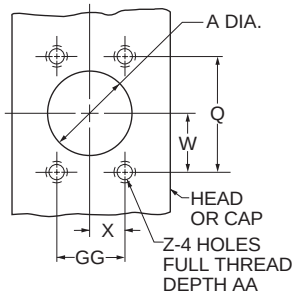


| Nom. Flange Size | A | Q | GG | W | X | Z-THD UNC-2B | AA Min. | SAE |
|---|---|---|---|---|---|---|---|---|
| 2 | 2.00 | 3.062 | 1.688 | 1.53 | 0.84 | 1/2-13 | 1.06 | 32 |
| 2 1/2 | 2.50 | 3.500 | 2.000 | 1.75 | 1.00 | 1/2-13 | 1.19 | 40 |

View Table of Contents

## Head Rectangular Mounting

Style JJ
(NFPA Style ME5)

(10.00-14.00 Bore)

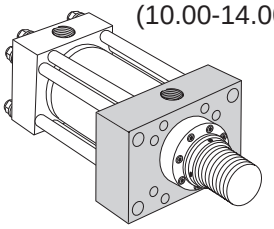

(16.00-20.00 Bore)

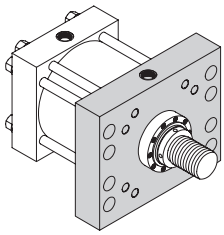

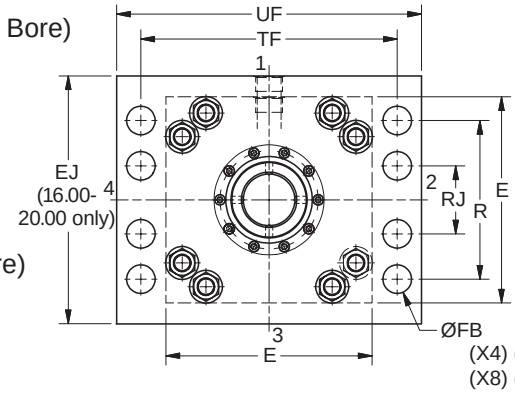


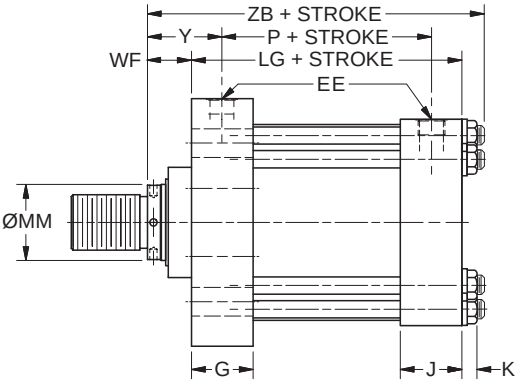


### Style JJ – Dimensional and Mounting Data

| Bore Ø | Rod No. | MM Rod Ø | E | EJ | Ports (EE) | | | FB Ø | G | J | K Max. | R | RJ | TF | UF | WF | Y | Add Stroke | | |
|---|---|---|---|---|---|---|---|---|---|---|---|---|---|---|---|---|---|---|---|---|
| | | | | | NPTF[1] | SAE Flange Port[2] | SAE Straight Thread Port[3] | | | | | | | | | | | LG | P | ZB Max. |
| 10.00 | 1 (std.) | 4.500 | 12.63 | - | 2.00 | 2.00 | 24 | 1.81 | 3.69 | 3.69 | 1.17 | 9.62 | - | 15.88 | 19.00 | 2.94 | 4.75 | 12.13 | 8.50 | 16.49 |
| | 2 | 7.000 | 12.63 | - | 2.00 | 2.00 | 24 | 1.81 | 3.69 | 3.69 | 1.17 | 9.62 | - | 15.88 | 19.00 | 3.50 | 5.31 | 12.13 | 8.50 | 17.05 |
| | 3 | 5.000 | 12.63 | - | 2.00 | 2.00 | 24 | 1.81 | 3.69 | 3.69 | 1.17 | 9.62 | - | 15.88 | 19.00 | 3.19 | 5.00 | 12.13 | 8.50 | 16.74 |
| | 4 | 5.500 | 12.63 | - | 2.00 | 2.00 | 24 | 1.81 | 3.69 | 3.69 | 1.17 | 9.62 | - | 15.88 | 19.00 | 3.19 | 5.00 | 12.13 | 8.50 | 16.74 |
| 12.00 | 1 (std.) | 5.500 | 14.88 | - | 2.50 | 2.50[4] | 24 | 2.06 | 4.44 | 4.44 | 1.30 | 11.45 | - | 18.50 | 22.00 | 3.19 | 5.38 | 14.50 | 10.13 | 19.24 |
| | 2 | 8.000 | 14.88 | - | 2.50 | 2.50[4] | 24 | 2.06 | 4.44 | 4.44 | 1.30 | 11.45 | - | 18.50 | 22.00 | 4.00 | 6.19 | 14.50 | 10.13 | 20.05 |
| | 3 | 7.000 | 14.88 | - | 2.50 | 2.50[4] | 24 | 2.06 | 4.44 | 4.44 | 1.30 | 11.45 | - | 18.50 | 22.00 | 3.50 | 5.69 | 14.50 | 10.13 | 19.55 |
| 14.00 | 1 (std.) | 7.000 | 17.13 | - | 2.50 | 2.50[4] | 24 | 2.31 | 4.88 | 4.88 | 1.30 | 13.26 | - | 21.00 | 25.00 | 3.50 | 5.88 | 15.63 | 10.88 | 20.68 |
| | 2 | 10.000 | 17.13 | - | 2.50 | 2.50[4] | 24 | 2.31 | 4.88 | 4.88 | 1.30 | 13.26 | - | 21.00 | 25.00 | 4.50 | 6.88 | 15.63 | 10.88 | 21.68 |
| | 3 | 8.000 | 17.13 | - | 2.50 | 2.50[4] | 24 | 2.31 | 4.88 | 4.88 | 1.30 | 13.26 | - | 21.00 | 25.00 | 4.00 | 6.38 | 15.63 | 10.88 | 21.18 |
| 16.00 | 1 (std.) | 8.000 | 19.00 | 20.00 | - | 3.00[5] | 24 | 1.81 | 5.88 | 5.88 | 1.70 | 15.50 | 8.00 | 21.00 | 24.50 | 4.00 | 7.00 | 18.13 | 12.13 | 24.08 |
| | 3 | 9.000 | 19.00 | 20.00 | - | 3.00[5] | 24 | 1.81 | 5.88 | 5.88 | 1.70 | 15.50 | 8.00 | 21.00 | 24.50 | 4.25 | 7.25 | 18.13 | 12.13 | 24.33 |
| | 4 | 10.000 | 19.00 | 20.00 | - | 3.00[5] | 24 | 1.81 | 5.88 | 5.88 | 1.70 | 15.50 | 8.00 | 21.00 | 24.50 | 4.50 | 7.50 | 18.13 | 12.13 | 24.58 |
| 18.00 | 1 (std.) | 9.000 | 22.00 | 23.00 | - | 3.00[5] | 24 | 2.06 | 6.88 | 6.88 | 1.70 | 18.00 | 7.25 | 24.25 | 28.25 | 4.25 | 7.25 | 21.13 | 15.13 | 27.33 |
| | 3 | 10.000 | 22.00 | 23.00 | - | 3.00[5] | 24 | 2.06 | 6.88 | 6.88 | 1.70 | 18.00 | 7.25 | 24.25 | 28.25 | 4.50 | 7.50 | 21.13 | 15.13 | 27.58 |
| 20.00 | 1 (std.) | 10.000 | 24.00 | 25.00 | - | 3.00[5] | 24 | 2.06 | 7.88 | 7.88 | 1.70 | 20.00 | 8.00 | 26.50 | 30.50 | 4.50 | 7.50 | 23.63 | 17.63 | 30.08 |

[1] NPTF ports are available at no extra charge.
[2] Optional SAE flange ports may be specified – flange to be supplied by customer. See Optional SAE Flange Port Pattern table for dimensions.
[3] SAE straight thread ports are standard and are indicated by port number.
[4] 2.50 SAE flange port is rated at 2500 psi
[5] 3.00 SAE flange port is rated at 2000 psi

### Optional SAE Flange Port Pattern

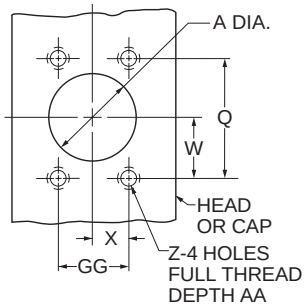


| Nom. Flange Size | A | Q | GG | W | X | Z-THD UNC-2B | AA Min. | SAE |
|---|---|---|---|---|---|---|---|---|
| 2 | 2.00 | 3.062 | 1.688 | 1.53 | 0.84 | 1/2-13 | 1.06 | 32 |
| 2 1/2 | 2.50 | 3.500 | 2.000 | 1.75 | 1.00 | 1/2-13 | 1.19 | 40 |
| 3 | 3.00 | 4.188 | 2.438 | 2.09 | 1.22 | 5/8-11 | 1.19 | 48 |

View Table of Contents

## Head Square Flange Mounting
Style JB
(NFPA Style MF5)

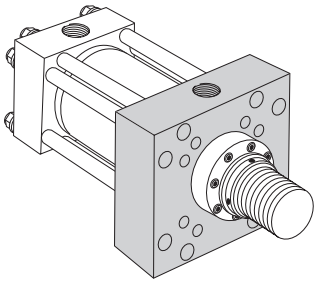

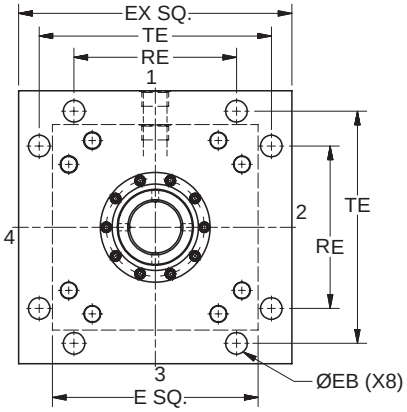


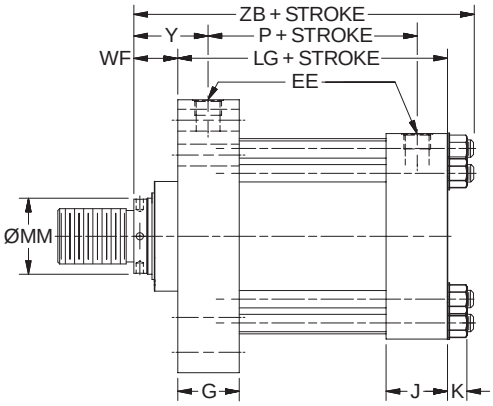


### Style JB – Dimensional and Mounting Data

| Bore Ø | Rod No. | MM Rod Ø | E | EB Ø | Ports (EE) NPTF[1] | Ports (EE) SAE Flange Port[2] | Ports (EE) SAE Straight Thread Port[3] | EX | G | J | K Max. | RE | TE | WF | Y | Add Stroke LG | Add Stroke P | Add Stroke ZB Max. |
|---|---|---|---|---|---|---|---|---|---|---|---|---|---|---|---|---|---|---|
| 10.00 | 1 (std.) | 4.500 | 12.63 | 1.31 | 2.00 | 2.00 | 24 | 16.63 | 3.69 | 3.69 | 1.17 | 9.89 | 14.13 | 2.94 | 4.75 | 12.13 | 8.50 | 16.49 |
| | 2 | 7.000 | 12.63 | 1.31 | 2.00 | 2.00 | 24 | 16.63 | 3.69 | 3.69 | 1.17 | 9.89 | 14.13 | 3.50 | 5.31 | 12.13 | 8.50 | 17.05 |
| | 3 | 5.000 | 12.63 | 1.31 | 2.00 | 2.00 | 24 | 16.63 | 3.69 | 3.69 | 1.17 | 9.89 | 14.13 | 3.19 | 5.00 | 12.13 | 8.50 | 16.74 |
| | 4 | 5.500 | 12.63 | 1.31 | 2.00 | 2.00 | 24 | 16.63 | 3.69 | 3.69 | 1.17 | 9.89 | 14.13 | 3.19 | 5.00 | 12.13 | 8.50 | 16.74 |
| 12.00 | 1 (std.) | 5.500 | 14.88 | 1.56 | 2.50 | 2.50[4] | 24 | 19.75 | 4.44 | 4.44 | 1.30 | 11.75 | 16.79 | 3.19 | 5.38 | 14.50 | 10.13 | 19.24 |
| | 2 | 8.000 | 14.88 | 1.56 | 2.50 | 2.50[4] | 24 | 19.75 | 4.44 | 4.44 | 1.30 | 11.75 | 16.79 | 4.00 | 6.19 | 14.50 | 10.13 | 20.05 |
| | 3 | 7.000 | 14.88 | 1.56 | 2.50 | 2.50[4] | 24 | 19.75 | 4.44 | 4.44 | 1.30 | 11.75 | 16.79 | 3.50 | 5.69 | 14.50 | 10.13 | 19.55 |
| 14.00 | 1 (std.) | 7.000 | 17.13 | 1.81 | 2.50 | 2.50[4] | 24 | 21.75 | 4.88 | 4.88 | 1.30 | 12.90 | 18.43 | 3.50 | 5.88 | 15.63 | 10.88 | 20.68 |
| | 2 | 10.000 | 17.13 | 1.81 | 2.50 | 2.50[4] | 24 | 21.75 | 4.88 | 4.88 | 1.30 | 12.90 | 18.43 | 4.50 | 6.88 | 15.63 | 10.88 | 21.68 |
| | 3 | 8.000 | 17.13 | 1.81 | 2.50 | 2.50[4] | 24 | 21.75 | 4.88 | 4.88 | 1.30 | 12.90 | 18.43 | 4.00 | 6.38 | 15.63 | 10.88 | 21.18 |
| 16.00 | 1 (std.) | 8.000 | 19.00 | 1.81 | - | 3.00[5] | 24 | 24.50 | 5.88 | 5.88 | 1.70 | 15.28 | 21.03 | 4.00 | 7.00 | 18.13 | 12.13 | 24.08 |
| | 3 | 9.000 | 19.00 | 1.81 | - | 3.00[5] | 24 | 24.50 | 5.88 | 5.88 | 1.70 | 15.28 | 21.03 | 4.25 | 7.25 | 18.13 | 12.13 | 24.33 |
| | 4 | 10.000 | 19.00 | 1.81 | - | 3.00[5] | 24 | 24.50 | 5.88 | 5.88 | 1.70 | 15.28 | 21.03 | 4.50 | 7.50 | 18.13 | 12.13 | 24.58 |
| 18.00 | 1 (std.) | 9.000 | 22.00 | 2.06 | - | 3.00[5] | 24 | 26.50 | 6.88 | 6.88 | 1.70 | 16.45 | 22.65 | 4.25 | 7.25 | 21.13 | 15.13 | 27.33 |
| | 3 | 10.000 | 22.00 | 2.06 | - | 3.00[5] | 24 | 26.50 | 6.88 | 6.88 | 1.70 | 16.45 | 22.65 | 4.50 | 7.50 | 21.13 | 15.13 | 27.58 |
| 20.00 | 1 (std.) | 10.000 | 24.00 | 2.06 | - | 3.00[5] | 24 | 29.00 | 7.88 | 7.88 | 1.70 | 18.07 | 24.87 | 4.50 | 7.50 | 23.63 | 17.63 | 30.08 |

[1] NPTF ports are available at no extra charge.
[2] Optional SAE flange ports may be specified – flange to be supplied by customer. See Optional SAE Flange Port Pattern table for dimensions.
[3] SAE straight thread ports are standard and are indicated by port number.
[4] 2.50 SAE flange port is rated at 2500 psi
[5] 3.00 SAE flange port is rated at 2000 psi

### Optional SAE Flange Port Pattern

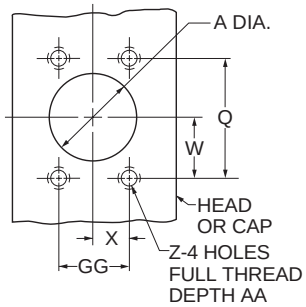


| Nom. Flange Size | A | Q | GG | W | X | Z-THD UNC-2B | AA Min. | SAE |
|---|---|---|---|---|---|---|---|---|
| 2 | 2.00 | 3.062 | 1.688 | 1.53 | 0.84 | 1/2-13 | 1.06 | 32 |
| 2 1/2 | 2.50 | 3.500 | 2.000 | 1.75 | 1.00 | 1/2-13 | 1.19 | 40 |
| 3 | 3.00 | 4.188 | 2.438 | 2.09 | 1.22 | 5/8-11 | 1.19 | 48 |

View Table of Contents

## Cap Rectangular Mounting
Style HH
(NFPA Style ME6)

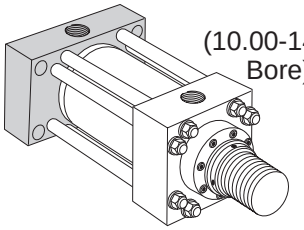

(10.00-14.00 Bore)

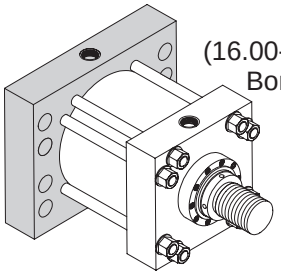

(16.00-20.00 Bore)

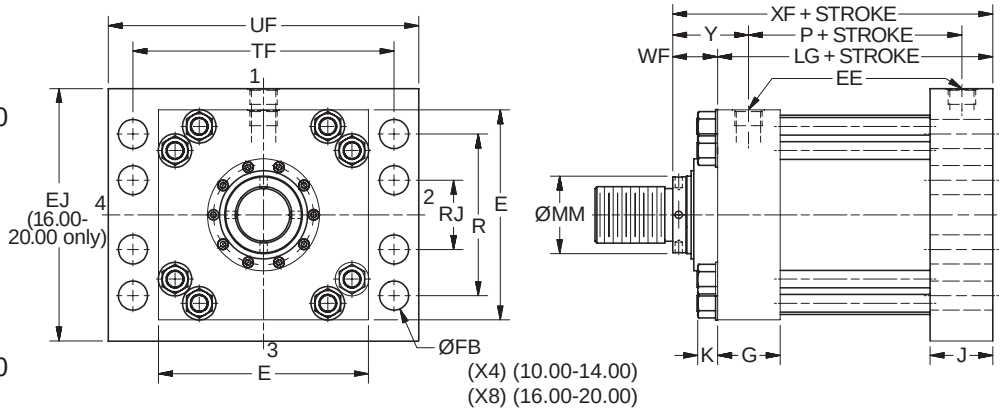


## Style HH – Dimensional and Mounting Data

| Bore Ø | Rod No. | MM Rod Ø | E | Ports (EE) | | | EJ | FB Ø | G | J | K Max. | R | RJ | TF | UF | WF | Y | Add Stroke | | |
|---|---|---|---|---|---|---|---|---|---|---|---|---|---|---|---|---|---|---|---|---|
| | | | | NPTF[1] | SAE Flange Port[2] | SAE Straight Thread Port[3] | | | | | | | | | | | | LG | P | XF |
| 10.00 | 1 (std.) | 4.500 | 12.63 | 2.00 | 2.00 | 24 | - | 1.81 | 3.69 | 3.69 | 1.17 | 9.62 | - | 15.88 | 19.00 | 2.94 | 4.75 | 12.13 | 8.50 | 15.06 |
| | 2 | 7.000 | 12.63 | 2.00 | 2.00 | 24 | - | 1.81 | 3.69 | 3.69 | 1.17 | 9.62 | - | 15.88 | 19.00 | 3.50 | 5.31 | 12.13 | 8.50 | 15.63 |
| | 3 | 5.000 | 12.63 | 2.00 | 2.00 | 24 | - | 1.81 | 3.69 | 3.69 | 1.17 | 9.62 | - | 15.88 | 19.00 | 3.19 | 5.00 | 12.13 | 8.50 | 15.31 |
| | 4 | 5.500 | 12.63 | 2.00 | 2.00 | 24 | - | 1.81 | 3.69 | 3.69 | 1.17 | 9.62 | - | 15.88 | 19.00 | 3.19 | 5.00 | 12.13 | 8.50 | 15.31 |
| 12.00 | 1 (std.) | 5.500 | 14.88 | 2.50 | 2.50[4] | 24 | - | 2.06 | 4.44 | 4.44 | 1.30 | 11.45 | - | 18.50 | 22.00 | 3.19 | 5.38 | 14.50 | 10.13 | 17.69 |
| | 2 | 8.000 | 14.88 | 2.50 | 2.50[4] | 24 | - | 2.06 | 4.44 | 4.44 | 1.30 | 11.45 | - | 18.50 | 22.00 | 4.00 | 6.19 | 14.50 | 10.13 | 18.50 |
| | 3 | 7.000 | 14.88 | 2.50 | 2.50[4] | 24 | - | 2.06 | 4.44 | 4.44 | 1.30 | 11.45 | - | 18.50 | 22.00 | 3.50 | 5.69 | 14.50 | 10.13 | 18.00 |
| 14.00 | 1 (std.) | 7.000 | 17.13 | 2.50 | 2.50[4] | 24 | - | 2.31 | 4.88 | 4.88 | 1.30 | 13.26 | - | 21.00 | 25.00 | 3.50 | 5.88 | 15.63 | 10.88 | 19.13 |
| | 2 | 10.000 | 17.13 | 2.50 | 2.50[4] | 24 | - | 2.31 | 4.88 | 4.88 | 1.30 | 13.26 | - | 21.00 | 25.00 | 4.50 | 6.88 | 15.63 | 10.88 | 20.13 |
| | 3 | 8.000 | 17.13 | 2.50 | 2.50[4] | 24 | - | 2.31 | 4.88 | 4.88 | 1.30 | 13.26 | - | 21.00 | 25.00 | 4.00 | 6.38 | 15.63 | 10.88 | 19.63 |
| 16.00 | 1 (std.) | 8.000 | 19.00 | - | 3.00[5] | 24 | 20.00 | 1.81 | 5.88 | 5.88 | 1.70 | 15.50 | 8.00 | 21.00 | 24.50 | 4.00 | 7.00 | 18.13 | 12.13 | 22.13 |
| | 3 | 9.000 | 19.00 | - | 3.00[5] | 24 | 20.00 | 1.81 | 5.88 | 5.88 | 1.70 | 15.50 | 8.00 | 21.00 | 24.50 | 4.25 | 7.25 | 18.13 | 12.13 | 22.38 |
| | 4 | 10.000 | 19.00 | - | 3.00[5] | 24 | 20.00 | 1.81 | 5.88 | 5.88 | 1.70 | 15.50 | 8.00 | 21.00 | 24.50 | 4.50 | 7.50 | 18.13 | 12.13 | 22.63 |
| 18.00 | 1 (std.) | 9.000 | 22.00 | - | 3.00[5] | 24 | 23.00 | 2.06 | 6.88 | 6.88 | 1.70 | 18.00 | 7.25 | 24.25 | 28.25 | 4.25 | 7.25 | 21.13 | 15.13 | 25.38 |
| | 3 | 10.000 | 22.00 | - | 3.00[5] | 24 | 23.00 | 2.06 | 6.88 | 6.88 | 1.70 | 18.00 | 7.25 | 24.25 | 28.25 | 4.50 | 7.50 | 21.13 | 15.13 | 25.63 |
| 20.00 | 1 (std.) | 10.000 | 24.00 | - | 3.00[5] | 24 | 25.00 | 2.06 | 7.88 | 7.88 | 1.70 | 20.00 | 8.00 | 26.50 | 30.50 | 4.50 | 7.50 | 23.63 | 17.63 | 28.13 |

[1]NPTF ports are available at no extra charge.
[2]Optional SAE flange ports may be specified – flange to be supplied by customer. See Optional SAE Flange Port Pattern table for dimensions.
[3]SAE straight thread ports are standard and are indicated by port number.
[4] 2.50 SAE flange port is rated at 2500 psi
[5] 3.00 SAE flange port is rated at 2000 psi

## Optional SAE Flange Port Pattern

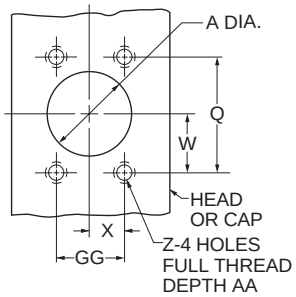


| Nom. Flange Size | A | Q | GG | W | X | Z-THD UNC-2B | AA Min. | SAE |
|---|---|---|---|---|---|---|---|---|
| 2 | 2.00 | 3.062 | 1.688 | 1.53 | 0.84 | 1/2-13 | 1.06 | 32 |
| 2 1/2 | 2.50 | 3.500 | 2.000 | 1.75 | 1.00 | 1/2-13 | 1.19 | 40 |
| 3 | 3.00 | 4.188 | 2.438 | 2.09 | 1.22 | 5/8-11 | 1.19 | 48 |

View Table of Contents

## Cap Square Flange Mounting
Style HB
(NFPA Style MF6)

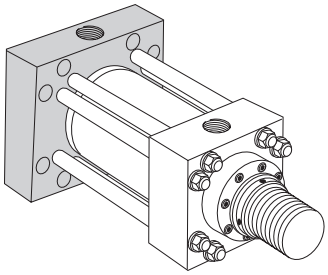

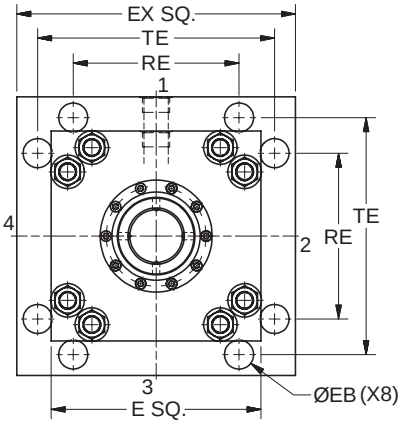


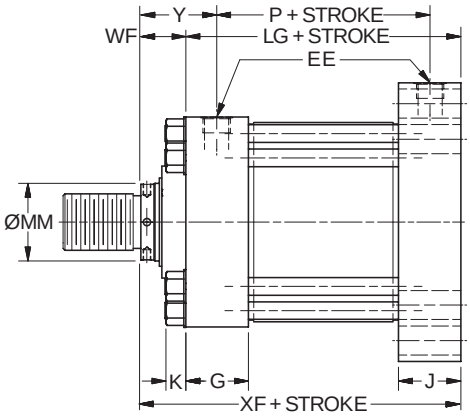


## Style HB – Dimensional and Mounting Data

| Bore Ø | Rod No. | MM Rod Ø | E | EB Ø | Ports (EE) NPTF[1] | Ports (EE) SAE Flange Port[2] | Ports (EE) SAE Straight Thread Port[3] | EX | G | J | K Max. | RE | TE | WF | Y | Add Stroke LG | Add Stroke P | Add Stroke XF |
|---|---|---|---|---|---|---|---|---|---|---|---|---|---|---|---|---|---|---|
| 10.00 | 1 (std.) | 4.500 | 12.63 | 1.31 | 2.00 | 2.00 | 24 | 16.63 | 3.69 | 3.69 | 1.17 | 9.89 | 14.13 | 2.94 | 4.75 | 12.13 | 8.50 | 15.06 |
| | 2 | 7.000 | 12.63 | 1.31 | 2.00 | 2.00 | 24 | 16.63 | 3.69 | 3.69 | 1.17 | 9.89 | 14.13 | 3.50 | 5.31 | 12.13 | 8.50 | 15.63 |
| | 3 | 5.000 | 12.63 | 1.31 | 2.00 | 2.00 | 24 | 16.63 | 3.69 | 3.69 | 1.17 | 9.89 | 14.13 | 3.19 | 5.00 | 12.13 | 8.50 | 15.31 |
| | 4 | 5.500 | 12.63 | 1.31 | 2.00 | 2.00 | 24 | 16.63 | 3.69 | 3.69 | 1.17 | 9.89 | 14.13 | 3.19 | 5.00 | 12.13 | 8.50 | 15.31 |
| 12.00 | 1 (std.) | 5.500 | 14.88 | 1.56 | 2.50 | 2.50[4] | 24 | 19.75 | 4.44 | 4.44 | 1.30 | 11.75 | 16.79 | 3.19 | 5.38 | 14.50 | 10.13 | 17.69 |
| | 2 | 8.000 | 14.88 | 1.56 | 2.50 | 2.50[4] | 24 | 19.75 | 4.44 | 4.44 | 1.30 | 11.75 | 16.79 | 4.00 | 6.19 | 14.50 | 10.13 | 18.50 |
| | 3 | 7.000 | 14.88 | 1.56 | 2.50 | 2.50[4] | 24 | 19.75 | 4.44 | 4.44 | 1.30 | 11.75 | 16.79 | 3.50 | 5.69 | 14.50 | 10.13 | 18.00 |
| 14.00 | 1 (std.) | 7.000 | 17.13 | 1.81 | 2.50 | 2.50[4] | 24 | 21.75 | 4.88 | 4.88 | 1.30 | 12.90 | 18.43 | 3.50 | 5.88 | 15.63 | 10.88 | 19.13 |
| | 2 | 10.000 | 17.13 | 1.81 | 2.50 | 2.50[4] | 24 | 21.75 | 4.88 | 4.88 | 1.30 | 12.90 | 18.43 | 4.50 | 6.88 | 15.63 | 10.88 | 20.13 |
| | 3 | 8.000 | 17.13 | 1.81 | 2.50 | 2.50[4] | 24 | 21.75 | 4.88 | 4.88 | 1.30 | 12.90 | 18.43 | 4.00 | 6.38 | 15.63 | 10.88 | 19.63 |
| 16.00 | 1 (std.) | 8.000 | 19.00 | 1.81 | - | 3.00[5] | 24 | 24.50 | 5.88 | 5.88 | 1.70 | 15.28 | 21.03 | 4.00 | 7.00 | 18.13 | 12.13 | 22.13 |
| | 3 | 9.000 | 19.00 | 1.81 | - | 3.00[5] | 24 | 24.50 | 5.88 | 5.88 | 1.70 | 15.28 | 21.03 | 4.25 | 7.25 | 18.13 | 12.13 | 22.38 |
| | 4 | 10.000 | 19.00 | 1.81 | - | 3.00[5] | 24 | 24.50 | 5.88 | 5.88 | 1.70 | 15.28 | 21.03 | 4.50 | 7.50 | 18.13 | 12.13 | 22.63 |
| 18.00 | 1 (std.) | 9.000 | 22.00 | 2.06 | - | 3.00[5] | 24 | 26.50 | 6.88 | 6.88 | 1.70 | 16.45 | 22.65 | 4.25 | 7.25 | 21.13 | 15.13 | 25.38 |
| | 3 | 10.000 | 22.00 | 2.06 | - | 3.00[5] | 24 | 26.50 | 6.88 | 6.88 | 1.70 | 16.45 | 22.65 | 4.50 | 7.50 | 21.13 | 15.13 | 25.63 |
| 20.00 | 1 (std.) | 10.000 | 24.00 | 2.06 | - | 3.00[5] | 24 | 29.00 | 7.88 | 7.88 | 1.70 | 18.07 | 24.87 | 4.50 | 7.50 | 23.63 | 17.63 | 28.13 |

[1]NPTF ports are available at no extra charge.
[2]Optional SAE flange ports may be specified – flange to be supplied by customer. See Optional SAE Flange Port Pattern table for dimensions.
[3]SAE straight thread ports are standard and are indicated by port number.
[4] 2.50 SAE flange port is rated at 2500 psi
[5] 3.00 SAE flange port is rated at 2000 psi

## Optional SAE Flange Port Pattern

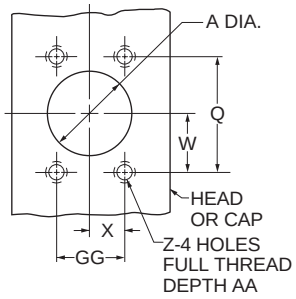


| Nom. Flange Size | A | Q | GG | W | X | Z-THD UNC-2B | AA Min. | SAE |
|---|---|---|---|---|---|---|---|---|
| 2 | 2.00 | 3.062 | 1.688 | 1.53 | 0.84 | 1/2-13 | 1.06 | 32 |
| 2 1/2 | 2.50 | 3.500 | 2.000 | 1.75 | 1.00 | 1/2-13 | 1.19 | 40 |
| 3 | 3.00 | 4.188 | 2.438 | 2.09 | 1.22 | 5/8-11 | 1.19 | 48 |

View Table of Contents

## Cap Fixed Clevis Mounting
Style BB
(NFPA Style MP1)

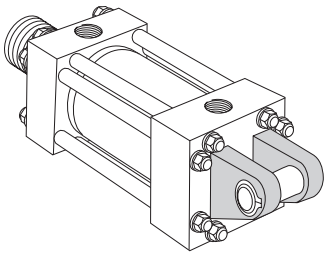

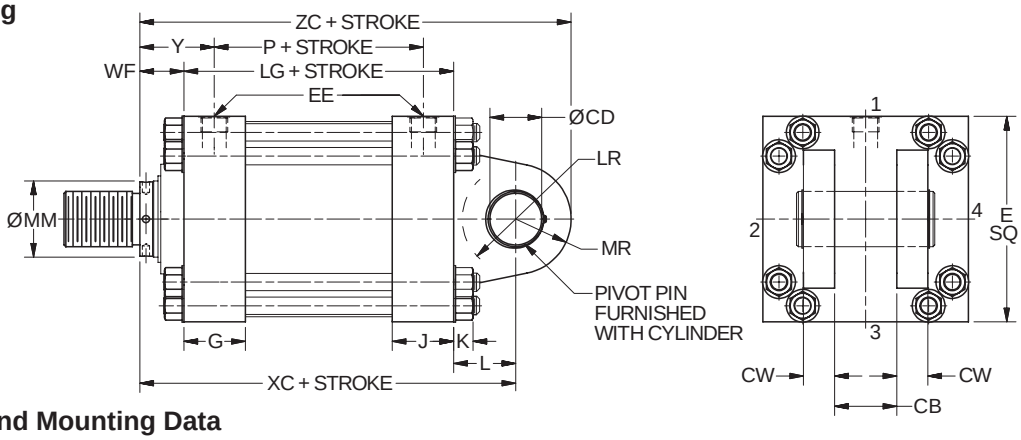


## Style BB – Dimensional and Mounting Data

| Bore Ø | Rod No. | MM Rod Ø | CB | CD[4] Ø +.000 -.002 | CW | E | EE Ports NPTF[1] | EE Ports SAE Flange Port[2] | EE Ports SAE Straight Thread Port[3] | G | J | K Max. | L | LR | MR | WF | Y | Add Stroke LG | Add Stroke P | Add Stroke XC | Add Stroke ZC |
|---|---|---|---|---|---|---|---|---|---|---|---|---|---|---|---|---|---|---|---|---|---|
| 10.00 | 1 (std.) | 4.500 | 4.00 | 3.501 | 2.00 | 12.63 | 2.00 | 2.00 | 24 | 3.69 | 3.69 | 1.17 | 4.00 | 3.38 | 3.50 | 2.94 | 4.75 | 12.13 | 8.50 | 19.06 | 22.56 |
| | 2 | 7.000 | 4.00 | 3.501 | 2.00 | 12.63 | 2.00 | 2.00 | 24 | 3.69 | 3.69 | 1.17 | 4.00 | 3.38 | 3.50 | 3.50 | 5.31 | 12.13 | 8.50 | 19.63 | 23.13 |
| | 3 | 5.000 | 4.00 | 3.501 | 2.00 | 12.63 | 2.00 | 2.00 | 24 | 3.69 | 3.69 | 1.17 | 4.00 | 3.38 | 3.50 | 3.19 | 5.00 | 12.13 | 8.50 | 19.31 | 22.81 |
| | 4 | 5.500 | 4.00 | 3.501 | 2.00 | 12.63 | 2.00 | 2.00 | 24 | 3.69 | 3.69 | 1.17 | 4.00 | 3.38 | 3.50 | 3.19 | 5.00 | 12.13 | 8.50 | 19.31 | 22.81 |
| 12.00 | 1 (std.) | 5.500 | 4.50 | 4.001 | 2.25 | 14.88 | 2.50 | 2.50[5] | 24 | 4.44 | 4.44 | 1.30 | 4.50 | 3.88 | 4.00 | 3.19 | 5.38 | 14.50 | 10.13 | 22.19 | 26.19 |
| | 2 | 8.000 | 4.50 | 4.001 | 2.25 | 14.88 | 2.50 | 2.50[5] | 24 | 4.44 | 4.44 | 1.30 | 4.50 | 3.88 | 4.00 | 4.00 | 6.19 | 14.50 | 10.13 | 23.00 | 27.00 |
| | 3 | 7.000 | 4.50 | 4.001 | 2.25 | 14.88 | 2.50 | 2.50[5] | 24 | 4.44 | 4.44 | 1.30 | 4.50 | 3.88 | 4.00 | 3.50 | 5.69 | 14.50 | 10.13 | 22.50 | 26.50 |
| 14.00 | 1 (std.) | 7.000 | 6.00 | 5.001 | 3.00 | 17.13 | 2.50 | 2.50[5] | 24 | 4.88 | 4.88 | 1.30 | 5.75 | 4.19 | 5.00 | 3.50 | 5.88 | 15.63 | 10.88 | 24.88 | 29.88 |
| | 2 | 10.000 | 6.00 | 5.001 | 3.00 | 17.13 | 2.50 | 2.50[5] | 24 | 4.88 | 4.88 | 1.30 | 5.75 | 4.19 | 5.00 | 4.50 | 6.88 | 15.63 | 10.88 | 25.88 | 30.88 |
| | 3 | 8.000 | 6.00 | 5.001 | 3.00 | 17.13 | 2.50 | 2.50[5] | 24 | 4.88 | 4.88 | 1.30 | 5.75 | 4.19 | 5.00 | 4.00 | 6.38 | 15.63 | 10.88 | 25.38 | 30.38 |
| 16.00 | 1 (std.) | 8.000 | 7.00 | 6.001 | 3.50 | 19.00 | - | 3.00[6] | 24 | 5.88 | 5.88 | 1.70 | 7.00 | 6.25 | 6.00 | 4.00 | 7.00 | 18.13 | 12.13 | 29.13 | 35.13 |
| | 3 | 9.000 | 7.00 | 6.001 | 3.50 | 19.00 | - | 3.00[6] | 24 | 5.88 | 5.88 | 1.70 | 7.00 | 6.25 | 6.00 | 4.25 | 7.25 | 18.13 | 12.13 | 29.38 | 35.38 |
| | 4 | 10.000 | 7.00 | 6.001 | 3.50 | 19.00 | - | 3.00[6] | 24 | 5.88 | 5.88 | 1.70 | 7.00 | 6.25 | 6.00 | 4.50 | 7.50 | 18.13 | 12.13 | 29.63 | 35.63 |
| 18.00 | 1 (std.) | 9.000 | 8.00 | 6.501 | 4.00 | 22.00 | - | 3.00[6] | 24 | 6.88 | 6.88 | 1.70 | 7.63 | 6.75 | 6.50 | 4.25 | 7.25 | 21.13 | 15.13 | 33.00 | 39.50 |
| | 3 | 10.000 | 8.00 | 6.501 | 4.00 | 22.00 | - | 3.00[6] | 24 | 6.88 | 6.88 | 1.70 | 7.63 | 6.75 | 6.50 | 4.50 | 7.50 | 21.13 | 15.13 | 33.25 | 39.75 |
| 20.00 | 1 (std.) | 10.000 | 9.00 | 7.501 | 4.50 | 24.00 | - | 3.00[6] | 24 | 7.88 | 7.88 | 1.70 | 8.75 | 7.75 | 7.50 | 4.50 | 7.50 | 23.63 | 17.63 | 36.88 | 44.38 |

[1]NPTF ports are available at no extra charge.
[2]Optional SAE flange ports may be specified – flange to be supplied by customer. See Optional SAE Flange Port Pattern table for dimensions.
[3]SAE straight thread ports are standard and are indicated by port number.
[4] Diameter CD is pin diameter.
[5] 2.50 SAE flange port is rated at 2500 psi
[6] 3.00 SAE flange port is rated at 2000 psi

## Optional SAE Flange Port Pattern

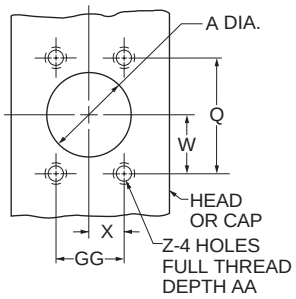


| Nom. Flange Size | A | Q | GG | W | X | Z-THD UNC-2B | AA Min. | SAE |
|---|---|---|---|---|---|---|---|---|
| 2 | 2.00 | 3.062 | 1.688 | 1.53 | 0.84 | 1/2-13 | 1.06 | 32 |
| 2 1/2 | 2.50 | 3.500 | 2.000 | 1.75 | 1.00 | 1/2-13 | 1.19 | 40 |
| 3 | 3.00 | 4.188 | 2.438 | 2.09 | 1.22 | 5/8-11 | 1.19 | 48 |

View Table of Contents

## Head Trunnion Mounting
Style D
(NFPA Style MT1)

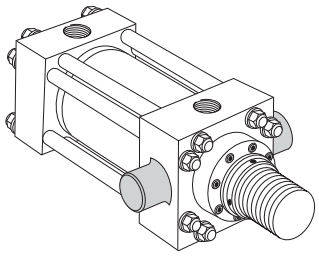

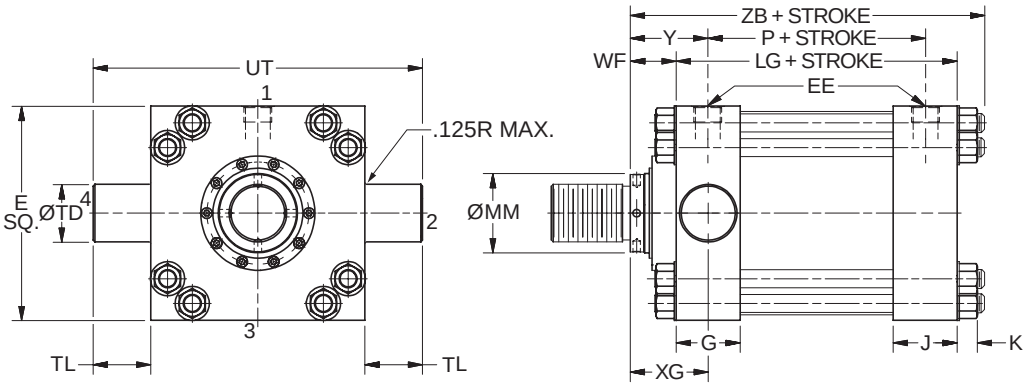


### Style D – Dimensional and Mounting Data

| Bore Ø | Rod No. | MM Rod Ø | E | Ports (EE) NPTF[1] | Ports (EE) SAE Flange Port[2] | Ports (EE) SAE Straight Thread Port[3] | G | J | K Max. | TD Ø +.000 -.001 | TL | UT | WF | XG | Y | Add Stroke LG | Add Stroke P | Add Stroke ZB Max. |
|---|---|---|---|---|---|---|---|---|---|---|---|---|---|---|---|---|---|---|
| 10.00 | 1 (std.) | 4.500 | 12.63 | 2.00 | 2.00 | 24 | 3.69 | 3.69 | 1.17 | 3.500 | 3.50 | 19.63 | 2.94 | 4.75 | 4.75 | 12.13 | 8.50 | 16.49 |
| | 2 | 7.000 | 12.63 | 2.00 | 2.00 | 24 | 3.69 | 3.69 | 1.17 | 3.500 | 3.50 | 19.63 | 3.50 | 5.31 | 5.31 | 12.13 | 8.50 | 17.05 |
| | 3 | 5.000 | 12.63 | 2.00 | 2.00 | 24 | 3.69 | 3.69 | 1.17 | 3.500 | 3.50 | 19.63 | 3.19 | 5.00 | 5.00 | 12.13 | 8.50 | 16.74 |
| | 4 | 5.500 | 12.63 | 2.00 | 2.00 | 24 | 3.69 | 3.69 | 1.17 | 3.500 | 3.50 | 19.63 | 3.19 | 5.00 | 5.00 | 12.13 | 8.50 | 16.74 |
| 12.00 | 1 (std.) | 5.500 | 14.88 | 2.50 | 2.50[4] | 24 | 4.44 | 4.44 | 1.30 | 4.000 | 4.00 | 22.88 | 3.19 | 5.38 | 5.38 | 14.50 | 10.13 | 19.24 |
| | 2 | 8.000 | 14.88 | 2.50 | 2.50[4] | 24 | 4.44 | 4.44 | 1.30 | 4.000 | 4.00 | 22.88 | 4.00 | 6.19 | 6.19 | 14.50 | 10.13 | 20.05 |
| | 3 | 7.000 | 14.88 | 2.50 | 2.50[4] | 24 | 4.44 | 4.44 | 1.30 | 4.000 | 4.00 | 22.88 | 3.50 | 5.69 | 5.69 | 14.50 | 10.13 | 19.55 |
| 14.00 | 1 (std.) | 7.000 | 17.13 | 2.50 | 2.50[4] | 24 | 4.88 | 4.88 | 1.30 | 4.500 | 4.50 | 26.13 | 3.50 | 5.94 | 5.88 | 15.63 | 10.88 | 20.68 |
| | 2 | 10.000 | 17.13 | 2.50 | 2.50[4] | 24 | 4.88 | 4.88 | 1.30 | 4.500 | 4.50 | 26.13 | 4.50 | 6.94 | 6.88 | 15.63 | 10.88 | 21.68 |
| | 3 | 8.000 | 17.13 | 2.50 | 2.50[4] | 24 | 4.88 | 4.88 | 1.30 | 4.500 | 4.50 | 26.13 | 4.00 | 6.44 | 6.38 | 15.63 | 10.88 | 21.18 |

[1] NPTF ports are available at no extra charge.
[2] Optional SAE flange ports may be specified – flange to be supplied by customer. See Optional SAE Flange Port Pattern table for dimensions.
[3] SAE straight thread ports are standard and are indicated by port number.
[4] 2.50 SAE flange port is rated at 2500 psi

### Style D – Maximum Operating Pressure

| Bore Ø | psi |
|---|---|
| 10.00 | 2800 |
| 12.00 | 2350 |
| 14.00 | 2200 |

### Optional SAE Flange Port Pattern

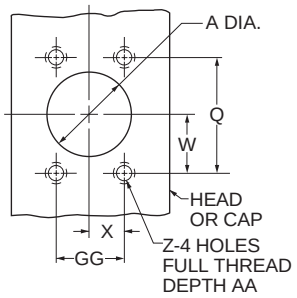


| Nom. Flange Size | A | Q | GG | W | X | Z-THD UNC-2B | AA Min. | SAE |
|---|---|---|---|---|---|---|---|---|
| 2 | 2.00 | 3.062 | 1.688 | 1.53 | 0.84 | 1/2-13 | 1.06 | 32 |
| 2 1/2 | 2.50 | 3.500 | 2.000 | 1.75 | 1.00 | 1/2-13 | 1.19 | 40 |

View Table of Contents

## Cap Trunnion Mounting
Style DB
(NFPA Style MT2)

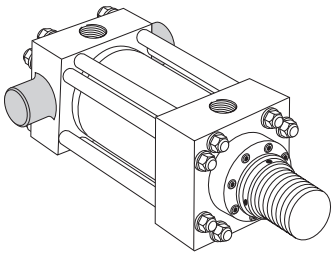

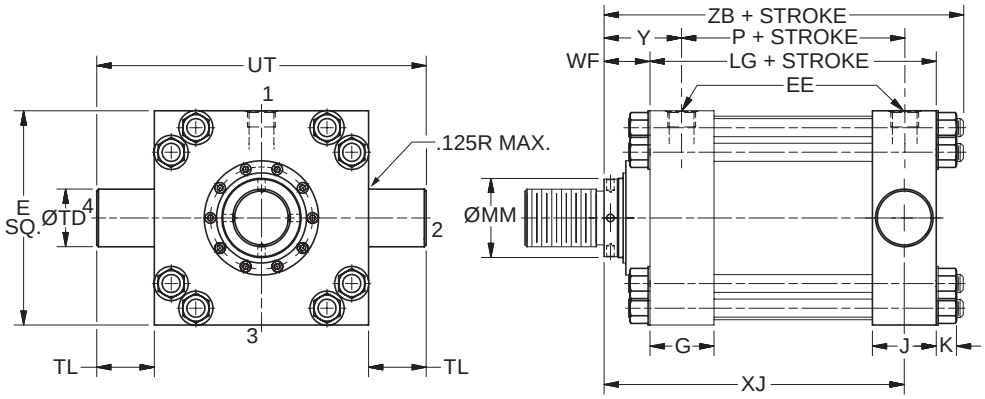


### Style DB – Dimensional and Mounting Data

| Bore Ø | Rod No. | MM Rod Ø | E | Ports (EE) NPTF[1] | Ports (EE) SAE Flange Port[2] | Ports (EE) SAE Straight Thread Port[3] | G | J | K Max. | TD Ø +.000 -.001 | TL | UT | WF | Y | Add Stroke LG | Add Stroke P | Add Stroke XJ | Add Stroke ZB Max. |
|---|---|---|---|---|---|---|---|---|---|---|---|---|---|---|---|---|---|---|
| 10.00 | 1 (std.) | 4.500 | 12.63 | 2.00 | 2.00 | 24 | 3.69 | 3.69 | 1.17 | 3.500 | 3.50 | 19.63 | 2.94 | 4.75 | 12.13 | 8.50 | 13.38 | 16.49 |
| | 2 | 7.000 | 12.63 | 2.00 | 2.00 | 24 | 3.69 | 3.69 | 1.17 | 3.500 | 3.50 | 19.63 | 3.50 | 5.31 | 12.13 | 8.50 | 13.94 | 17.05 |
| | 3 | 5.000 | 12.63 | 2.00 | 2.00 | 24 | 3.69 | 3.69 | 1.17 | 3.500 | 3.50 | 19.63 | 3.19 | 5.00 | 12.13 | 8.50 | 13.63 | 16.74 |
| | 4 | 5.500 | 12.63 | 2.00 | 2.00 | 24 | 3.69 | 3.69 | 1.17 | 3.500 | 3.50 | 19.63 | 3.19 | 5.00 | 12.13 | 8.50 | 13.63 | 16.74 |
| 12.00 | 1 (std.) | 5.500 | 14.88 | 2.50 | 2.50[4] | 24 | 4.44 | 4.44 | 1.30 | 4.000 | 4.00 | 22.88 | 3.19 | 5.38 | 14.50 | 10.13 | 15.50 | 19.24 |
| | 2 | 8.000 | 14.88 | 2.50 | 2.50[4] | 24 | 4.44 | 4.44 | 1.30 | 4.000 | 4.00 | 22.88 | 4.00 | 6.19 | 14.50 | 10.13 | 16.31 | 20.05 |
| | 3 | 7.000 | 14.88 | 2.50 | 2.50[4] | 24 | 4.44 | 4.44 | 1.30 | 4.000 | 4.00 | 22.88 | 3.50 | 5.69 | 14.50 | 10.13 | 15.81 | 19.55 |
| 14.00 | 1 (std.) | 7.000 | 17.13 | 2.50 | 2.50[4] | 24 | 4.88 | 4.88 | 1.30 | 4.500 | 4.50 | 26.13 | 3.50 | 5.88 | 15.63 | 10.88 | 16.69 | 20.68 |
| | 2 | 10.000 | 17.13 | 2.50 | 2.50[4] | 24 | 4.88 | 4.88 | 1.30 | 4.500 | 4.50 | 26.13 | 4.50 | 6.88 | 15.63 | 10.88 | 17.69 | 21.68 |
| | 3 | 8.000 | 17.13 | 2.50 | 2.50[4] | 24 | 4.88 | 4.88 | 1.30 | 4.500 | 4.50 | 26.13 | 4.00 | 6.38 | 15.63 | 10.88 | 17.19 | 21.18 |

[1] NPTF ports are available at no extra charge.
[2] Optional SAE flange ports may be specified – flange to be supplied by customer. See Optional SAE Flange Port Pattern table for dimensions.
[3] SAE straight thread ports are standard and are indicated by port number.
[4] 2.50 SAE flange port is rated at 2500 psi



### Optional SAE Flange Port Pattern

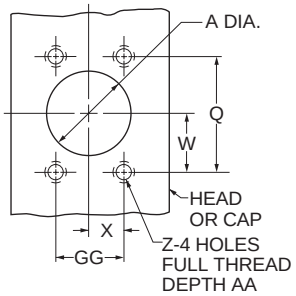


| Nom. Flange Size | A | Q | GG | W | X | Z-THD UNC-2B | AA Min. | SAE |
|---|---|---|---|---|---|---|---|---|
| 2 | 2.00 | 3.062 | 1.688 | 1.53 | 0.84 | 1/2-13 | 1.06 | 32 |
| 2 1/2 | 2.50 | 3.500 | 2.000 | 1.75 | 1.00 | 1/2-13 | 1.19 | 40 |

### Style DB – Maximum Operating Pressure

| Bore Ø | psi |
|---|---|
| 10.00 | 2800 |
| 12.00 | 2350 |
| 14.00 | 2200 |

View Table of Contents

## Intermediate Fixed Trunnion Mounting

Style DD
(NFPA Style MT4)

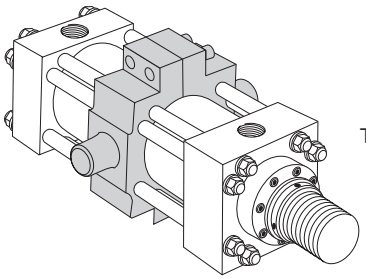

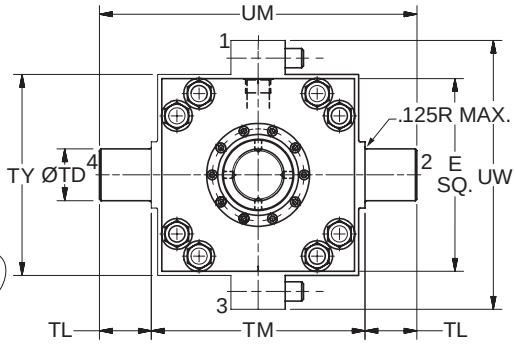


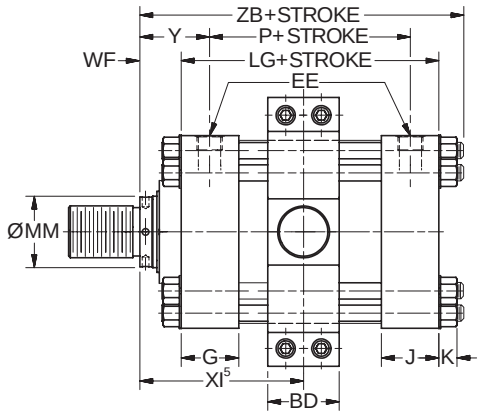


## Style DD – Dimensional and Mounting Data

| Bore Ø | Rod No. | MM Rod Ø | E | EE Ports NPTF[1] | EE Ports SAE Flge. Port[2] | EE Ports SAE Str. Thr. Port[3] | BD | G | J | K Max. | TD Ø +.000 -.001 | TL | TM | TY | UM | UW | WF | Min. XI[5] Styles 4 & 9 | Y | Add Stroke LG | Add Stroke P | Add Stroke ZB Max. |
|---|---|---|---|---|---|---|---|---|---|---|---|---|---|---|---|---|---|---|---|---|---|---|
| 10.00 | 1(std.) | 4.500 | 12.63 | 2.00 | 2.00 | 24 | 4.50 | 3.69 | 3.69 | 1.17 | 3.500 | 3.50 | 14.00 | 13.00 | 21.00 | 17.50 | 2.94 | 9.06 | 4.75 | 12.13 | 8.50 | 16.49 |
| | 2 | 7.000 | 12.63 | 2.00 | 2.00 | 24 | 4.50 | 3.69 | 3.69 | 1.17 | 3.500 | 3.50 | 14.00 | 13.00 | 21.00 | 17.50 | 3.50 | 9.63 | 5.31 | 12.13 | 8.50 | 17.05 |
| | 3 | 5.000 | 12.63 | 2.00 | 2.00 | 24 | 4.50 | 3.69 | 3.69 | 1.17 | 3.500 | 3.50 | 14.00 | 13.00 | 21.00 | 17.50 | 3.19 | 9.31 | 5.00 | 12.13 | 8.50 | 16.74 |
| | 4 | 5.500 | 12.63 | 2.00 | 2.00 | 24 | 4.50 | 3.69 | 3.69 | 1.17 | 3.500 | 3.50 | 14.00 | 13.00 | 21.00 | 17.50 | 3.19 | 9.31 | 5.00 | 12.13 | 8.50 | 16.74 |
| 12.00 | 1(std.) | 5.500 | 14.88 | 2.50 | 2.50[6] | 24 | 5.50 | 4.44 | 4.44 | 1.30 | 4.000 | 4.00 | 16.50 | 15.50 | 24.50 | 20.75 | 3.19 | 10.63 | 5.38 | 14.50 | 10.13 | 19.24 |
| | 2 | 8.000 | 14.88 | 2.50 | 2.50[6] | 24 | 5.50 | 4.44 | 4.44 | 1.30 | 4.000 | 4.00 | 16.50 | 15.50 | 24.50 | 20.75 | 4.00 | 11.50 | 6.19 | 14.50 | 10.13 | 20.05 |
| | 3 | 7.000 | 14.88 | 2.50 | 2.50[6] | 24 | 5.50 | 4.44 | 4.44 | 1.30 | 4.000 | 4.00 | 16.50 | 15.50 | 24.50 | 20.75 | 3.50 | 10.94 | 5.69 | 14.50 | 10.13 | 19.55 |
| 14.00 | 1(std.) | 7.000 | 17.13 | 2.50 | 2.50[6] | 24 | 5.50 | 4.88 | 4.88 | 1.30 | 4.500 | 4.50 | 19.50 | 19.25 | 28.50 | 24.75 | 3.50 | 11.44 | 5.88 | 15.63 | 10.88 | 20.68 |
| | 2 | 10.000 | 17.13 | 2.50 | 2.50[6] | 24 | 5.50 | 4.88 | 4.88 | 1.30 | 4.500 | 4.50 | 19.50 | 19.25 | 28.50 | 24.75 | 4.50 | 12.44 | 6.88 | 15.63 | 10.88 | 21.68 |
| | 3 | 8.000 | 17.13 | 2.50 | 2.50[6] | 24 | 5.50 | 4.88 | 4.88 | 1.30 | 4.500 | 4.50 | 19.50 | 19.25 | 28.50 | 24.75 | 4.00 | 11.94 | 6.38 | 15.63 | 10.88 | 21.18 |
| 16.00 | 1(std.) | 8.000 | 19.00 | [4] | 3.00[7] | 24 | [4] | 5.88 | 5.88 | 1.70 | [4] | [4] | [4] | [4] | [4] | [4] | 4.00 | [4] | 7.00 | 18.13 | 12.13 | 24.08 |
| | 3 | 9.000 | 19.00 | [4] | 3.00[7] | 24 | [4] | 5.88 | 5.88 | 1.70 | [4] | [4] | [4] | [4] | [4] | [4] | 4.25 | [4] | 7.25 | 18.13 | 12.13 | 24.33 |
| | 4 | 10.000 | 19.00 | [4] | 3.00[7] | 24 | [4] | 5.88 | 5.88 | 1.70 | [4] | [4] | [4] | [4] | [4] | [4] | 4.50 | [4] | 7.50 | 18.13 | 12.13 | 24.58 |
| 18.00 | 1(std.) | 9.000 | 22.00 | [4] | 3.00[7] | 24 | [4] | 6.88 | 6.88 | 1.70 | [4] | [4] | [4] | [4] | [4] | [4] | 4.25 | [4] | 7.25 | 21.13 | 15.13 | 27.33 |
| | 3 | 10.000 | 22.00 | [4] | 3.00[7] | 24 | [4] | 6.88 | 6.88 | 1.70 | [4] | [4] | [4] | [4] | [4] | [4] | 4.50 | [4] | 7.50 | 21.13 | 15.13 | 27.58 |
| 20.00 | 1(std.) | 10.000 | 24.00 | [4] | 3.00[7] | 24 | [4] | 7.88 | 7.88 | 1.70 | [4] | [4] | [4] | [4] | [4] | [4] | 4.50 | [4] | 7.50 | 23.63 | 17.63 | 30.08 |

[1]NPTF ports are available at no extra charge.
[2]Optional SAE flange ports may be specified – flange to be supplied by customer. See Optional SAE Flange Port Pattern table for dimensions.
[3]SAE straight thread ports are standard and are indicated by port number.
[4]Consult Factory
[5]Dimension XI to be specified by customer. Reference point for rod end Style 55 is end of piston rod.
[6]2.50 SAE flange port is rated at 2500 psi
[7]3.00 SAE flange port is rated at 2000 psi

## Optional SAE Flange Port Pattern

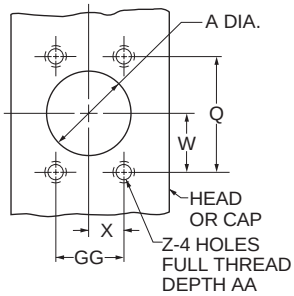


| Nom. Flange Size | A | Q | GG | W | X | Z-THD UNC-2B | AA Min. | SAE |
|---|---|---|---|---|---|---|---|---|
| 2 | 2.00 | 3.062 | 1.688 | 1.53 | 0.84 | 1/2-13 | 1.06 | 32 |
| 2 1/2 | 2.50 | 3.500 | 2.000 | 1.75 | 1.00 | 1/2-13 | 1.19 | 40 |
| 3 | 3.00 | 4.188 | 2.438 | 2.09 | 1.22 | 5/8-11 | 1.19 | 48 |

## Style DD – Maximum Operating Pressure

| Bore Ø | psi |
|---|---|
| 10.00 | 2800 |
| 12.00 | 2350 |
| 14.00 | 2200 |

View Table of Contents

## Double Rod Cylinder
Style K

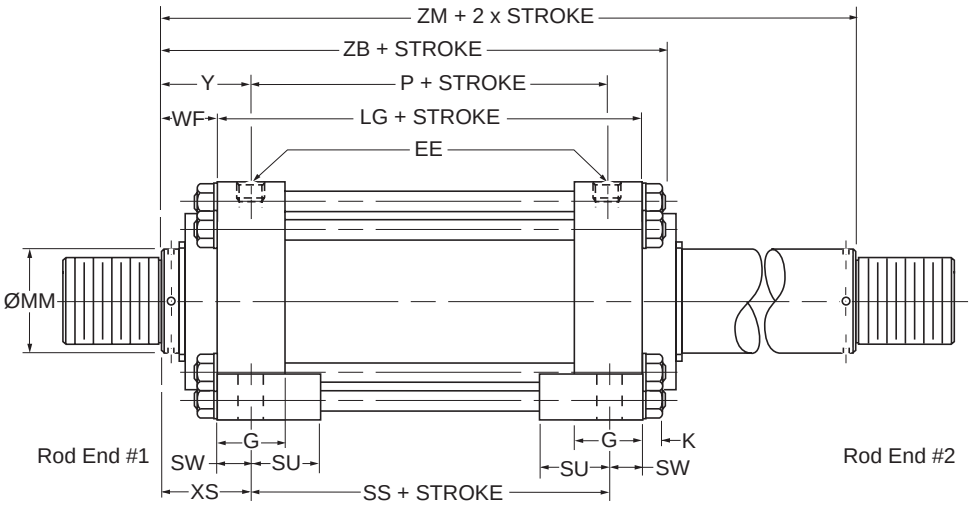


| Mounting Styles for Single Rod Models | Mounting Styles for Corresponding Double Rod Models[1] | Dimension Shown on This Page Supplement Dimensions on Pages Listed Below |
|---|---|---|
| TB | KTB | 120 |
| TD | KTD | 120 |
| C | KC | 121 |
| JJ | KJJ | 122 |
| JB | KJB | 123 |
| D | KD | 127 |
| DD | KDD[2] | 129 |

[1]If only one end of these Double Rod Cylinders is to be cushioned, be sure to specify clearly which end this will be.

[2]Specify XI dimension from rod end #1.

| Bore Ø | Rod Code | Rod Ø | Add 2X Stroke ZM |
|---|---|---|---|
| 10.00 | 1 | 4.500 | 18.00 |
| | 2 | 7.000 | 19.12 |
| | 3 | 5.000 | 18.50 |
| | 4 | 5.500 | 18.50 |
| 12.00 | 1 | 5.500 | 20.88 |
| | 2 | 8.000 | 22.50 |
| | 3 | 7.000 | 21.50 |
| 14.00 | 1 | 7.000 | 22.63 |
| | 2 | 10.000 | 24.63 |
| | 3 | 8.000 | 23.63 |
| 16.00 | 1 | 8.000 | 26.13 |
| | 3 | 9.000 | 26.63 |
| | 4 | 10.000 | 27.13 |
| 18.00 | 1 | 9.000 | 29.63 |
| | 3 | 10.000 | 30.13 |
| 20.00 | 1 | 10.000 | 32.63 |

### How to Use Double Rod Cylinder Dimension Drawings

To obtain dimensioning information on a double rod cylinder, first select the desired mounting style and refer to the corresponding single rod cylinder model shown on the preceding pages. (See table above.) After you have determined all necessary dimensions from that drawing, turn back to this page and supplement those dimensions with additional ones from the drawing above and table at right. These added dimensions differ from, or are in addition to, those shown on the preceding pages and provide the additional information needed to completely dimension a double rod cylinder model.

On a double rod cylinder where the two rod ends are different, be sure to clearly state which rod end is to be assembled at which end. Port position 1 is standard. If other than standard, specify pos. 2, 3 or 4 when viewed from rod end #1 only. See port position information in Section H.

View Table of Contents

# Section F

## Cylinder Accessories and Replacement Parts


| | |
|---|---|
| Mounting Accessories | 132-135 |
| Style SB Spherical Bearing Mounting Accessories | 136 |
| Style SE Spherical Bearing Mounting Accessories | 137 |
| Linear Alignment Couplers | 138 |
| Split Couplers / Weld Plates / Dual Axis Knuckles | 139 |
| 2H / 2HD Parts Identification and Tie Rod Torque | 140 |
| 2HB Parts Identification and Flange Screw Torque | 141 |
| 2H / 2HD / 2HB Rod Gland and Rod Seal Kits (Including Crown Wiper Kits), Gland Retainer Screw Torque, Piston Seal and Body Seal Kits | 142-143 |
| 3H / 3HD / 3HB 7.00"-8.00" Bore Parts Identification, Rod Gland and Rod Seal Kits (Including Crown Wiper Kits), Gland Retainer Screw Torque, Piston Seal and Body Seal Kits | 144-145 |
| 3H Large Bore Parts Identification | 146 |
| 3H Large Bore Rod Bearing and Rod Seal Kits, Piston Seal Kits, Body Seal Kits, Tie Rod Torque and Retainer Bolt Torque | 147 |
| Gland and Spanner Wrenches | 148 |

View Table of Contents

## Cylinder Accessories

Parker offers a complete range of cylinder accessories to assure flexibility and versatility in present or future cylinder applications.

## Rod End Accessories

Accessories offered for the rod end of the cylinder include: Rod Clevis, Eye Bracket, Knuckle, Clevis Bracket and Pivot Pin. To select the proper part number for any desired accessory, refer to Chart A below and look opposite the thread size of the rod end as indicated in the first column. The Pivot Pins, Eye Brackets and Clevis Brackets are listed opposite the thread size which their mating Knuckles or Clevises fit.

## Accessory Load Capacity

The various accessories on this and the following pages have been load rated for your convenience. The load capacity shown in lbs. is the recommended maximum load for that accessory based on a 4:1 design factor in tension. (Pivot Pin is rated in shear.) Before specifying, compare the actual load or the tension (pull) force at maximum operating pressure of the cylinder with the load capacity of the accessory you plan to use. If load or pull force of cylinder exceeds load capacity of accessory, consult factory.

### Chart A

| Thread Size | Pin Ø | Rod Clevis | | Mounting Plate or Eye Bracket | | Pivot Pin | |
|---|---|---|---|---|---|---|---|
| | | | | Forged Steel or Cast Ductile Iron | | | |
| | | Part Number | Load Capacity (lb) | Part Number | Load Capacity (lb) | Part Number | Shear Capacity (lb) |
| 5/16-24 | 0.312 | 0512210000[1] | 2,600 | 0959810031 | 1,850 | – | – |
| 7/16-20 | 0.500 | 0509400000 | 4,250 | 0959810050[2] | 4,620 | 0683680000 | 8,600 |
| 1/2-20 | 0.500 | 0509410000 | 4,900 | 0959810050[2] | 4,620 | 0683680000 | 8,600 |
| 3/4-16 | 0.750 | 0509420000 | 11,200 | 0959810075[2] | 12,370 | 0683690000 | 19,300 |
| 3/4-16 | 0.750 | 1332840000 | 11,200 | 0959810075[2] | 12,370 | 0683690000 | 19,300 |
| 7/8-14 | 1.000 | 0509430000 | 18,800 | 0959810100[2] | 20,450 | 0683700000 | 34,300 |
| 1-14 | 1.000 | 0509440000 | 19,500 | 0959810100[2] | 20,450 | 0683700000 | 34,300 |
| 1-14 | 1.000 | 1332850000 | 19,500 | 0959810100[2] | 20,450 | 0683700000 | 34,300 |
| 1 1/4-12 | 1.375 | 0509450000 | 33,500 | 0959810138 | 33,500 | 0683710000 | 65,000 |
| 1 1/4-12 | 1.375 | 1332860000 | 33,500 | 0959810138 | 33,500 | 0683710000 | 65,000 |
| 1 1/2-12 | 1.750 | 0509460000 | 45,600 | 0959810175 | 49,480 | 0683720000 | 105,200 |
| 1 3/4-12 | 2.000 | 0509470000 | 65,600 | 0959810200[2] | 70,100 | 0683730000 | 137,400 |
| 1 7/8-12 | 2.000 | 0509480000 | 65,600 | 0959810200[2] | 70,100 | 0683730000 | 137,400 |
| 2 1/4-12 | 2.500 | 0509490000 | 98,200 | 0959810250[2] | 98,200 | 0683740000 | 214,700 |
| 2 1/2-12 | 3.000 | 0509500000 | 98,200 | 0959810300[2] | 121,940 | 0683750000 | 309,200 |
| 2 3/4-12 | 3.000 | 0509510000 | 98,200 | 0959810300[2] | 121,940 | 0683750000 | 309,200 |
| 3 1/4-12 | 3.500 | 0509520000 | 156,700 | 0959810350 | 187,910 | 0735450000 | 420,900 |
| 3 1/2-12 | 4.000 | 0509530000 | 193,200 | 0959810400 | 268,000 | 0735470000 | 565,800 |
| 4-12 | 4.000 | 0509540000 | 221,200 | 0959810400 | 268,000 | 0735470000 | 565,800 |

[1] Includes pivot pin.
[2] Cylinder accessory dimensions conform to ANSI/NFPA/T3.6.8 R3-2010.

## Mounting Plates

Mounting Plates for Style BB (clevis mounted) cylinders are offered. To select proper part number for your application, refer to Chart B at right.

### Chart B

| Series 2H, 2HD, 2HB | | Series 3H, 3HD, 3HB | |
|---|---|---|---|
| Mounting Plate Part Number | Bore Ø | Mounting Plate Part Number | Bore Ø |
| 0959810050 | 1.50 | 0959810250 | 7.00 |
| 0959810075 | 2.00, 2.50 | 0959810300 | 8.00 |
| 0959810100 | 3.25 | 0959810350 | 10.00 |
| 0959810138 | 4.00 | 0959810400 | 12.00 |
| 0959810175 | 5.00 | | |
| 0959810200 | 6.00 | | |

View Table of Contents

## Rod Clevis Dimensions

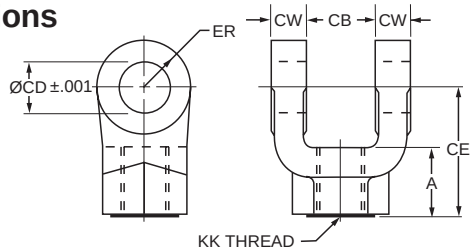


| Part Number[1] | Pin Ø | A | CB | CD Ø | CE | CW | ER | KK Thread |
|---|---|---|---|---|---|---|---|---|
| 0512210000[2] | 0.310 | 0.81 | 0.34 | 0.314 | 2.25 | 0.20 | 0.30 | 5/16-24 |
| 0509400000 | 0.500 | 0.75 | 0.77 | 0.503 | 1.50 | 0.49 | 0.50 | 7/16-20 |
| 0509410000 | 0.500 | 0.75 | 0.77 | 0.503 | 1.50 | 0.49 | 0.50 | 1/2-20 |
| 0509420000 | 0.750 | 1.13 | 1.27 | 0.753 | 2.13 | 0.62 | 0.75 | 3/4-16 |
| 1332840000 | 0.750 | 1.13 | 1.27 | 0.753 | 2.38 | 0.62 | 0.75 | 3/4-16 |
| 0509430000 | 1.000 | 1.63 | 1.52 | 1.003 | 2.94 | 0.74 | 1.00 | 7/8-14 |
| 0509440000 | 1.000 | 1.63 | 1.52 | 1.003 | 2.94 | 0.74 | 1.00 | 1-14 |
| 1332850000 | 1.000 | 1.63 | 1.52 | 1.003 | 3.13 | 0.74 | 1.00 | 1-14 |
| 0509450000 | 1.375 | 1.88 | 2.04 | 1.378 | 3.75 | 0.99 | 1.38 | 1 1/4-12 |
| 1332860000 | 1.375 | 2.00 | 2.04 | 1.378 | 4.13 | 0.99 | 1.38 | 1 1/4-12 |
| 0509460000 | 1.750 | 2.25 | 2.54 | 1.753 | 4.50 | 1.24 | 1.75 | 1 1/2-12 |
| 0509470000 | 2.000 | 3.00 | 2.54 | 2.003 | 5.50 | 1.24 | 2.00 | 1 3/4-12 |
| 0509480000 | 2.000 | 3.00 | 2.54 | 2.003 | 5.50 | 1.24 | 2.00 | 1 7/8-12 |
| 0509490000 | 2.500 | 3.50 | 3.04 | 2.503 | 6.50 | 1.49 | 2.50 | 2 1/4-12 |
| 0509500000 | 3.000 | 3.50 | 3.04 | 3.003 | 6.75 | 1.49 | 2.75 | 2 1/2-12 |
| 0509510000 | 3.000 | 3.50 | 3.04 | 3.003 | 6.75 | 1.49 | 2.75 | 2 3/4-12 |
| 0509520000 | 3.500 | 3.50[3] | 4.04 | 3.503 | 7.75 | 1.98 | 3.50 | 3 1/4-12 |
| 0509530000 | 4.000 | 4.00[3] | 4.54 | 4.003 | 8.81 | 2.23 | 4.00 | 3 1/2-12 |
| 0509540000 | 4.000 | 4.00[3] | 4.54 | 4.003 | 8.81 | 2.23 | 4.00 | 4-12 |

[1] Rod Clevises with pin diameters 0.312 thru 1.375 are forged steel. Rod Clevises with 1.750 pin diameter and larger are cast ductile iron.
[2] Includes Pivot Pin
[3] Consult appropriate cylinder rod end dimensions for compatibility.

## Pivot Pin Dimensions

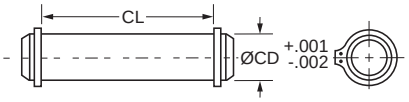


| Part Number | CD Ø | CL |
|---|---|---|
| 0683680000 | 0.500 | 1.88 |
| 0683690000 | 0.750 | 2.63 |
| 0683700000 | 1.000 | 3.13 |
| 0683710000 | 1.375 | 4.19 |
| 0683720000 | 1.750 | 5.19 |
| 0683730000 | 2.000 | 5.19 |
| 0683740000 | 2.500 | 6.19 |
| 0683750000 | 3.000 | 6.25 |
| 0735450000 | 3.500 | 8.25 |
| 0735470000[4] | 4.000 | 9.00 |

[4] This size supplied with cotter pins.

1. Pivot Pins are furnished with Clevis Mounted Cylinders as standard.
2. Pivot Pins are furnished with (2) Retainer Rings.
3. Pivot Pins must be ordered as a separate item if to be used with Knuckles, Rod Clevises, or Clevis Brackets.

## Forged Steel or Cast Ductile Iron Mounting Plate or Eye Bracket Dimensions[5]

**Note: Cast ductile iron eye brackets must not be welded in place.**

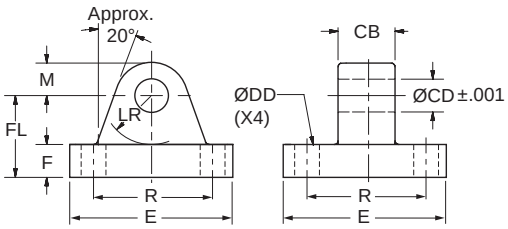


| Cast or Forged[6] Part Number | Pin Ø | CB | CD Ø | DD Ø | E (As Cast) | F | FL | LR | M (As Cast) | R |
|---|---|---|---|---|---|---|---|---|---|---|
| 0959810031 | 0.312 | 0.31 | 0.314 | 0.27 | 2.25 | 0.38 | 1.00 | 0.59 | 0.38 | 1.75 |
| 0959810050 | 0.500 | 0.75 | 0.503 | 0.41 | 2.50 | 0.38 | 1.13 | 0.69 | 0.50 | 1.63 |
| 0959810075 | 0.750 | 1.25 | 0.753 | 0.53 | 3.50 | 0.63 | 1.88 | 1.13 | 0.75 | 2.55 |
| 0959810100 | 1.000 | 1.50 | 1.003 | 0.66 | 4.50 | 0.88 | 2.38 | 1.37 | 1.00 | 3.25 |
| 0959810138 | 1.375 | 2.00 | 1.378 | 0.66 | 5.00 | 1.00[7] | 3.00 | 1.88 | 1.38 | 3.82 |
| 0959810175 | 1.750 | 2.50 | 1.753 | 0.91 | 6.50 | 1.25[7] | 3.38 | 2.13 | 1.75 | 4.95 |
| 0959810200 | 2.000 | 2.50 | 2.003 | 1.06 | 7.50 | 1.50 | 4.00 | 2.38 | 2.00 | 5.73 |
| 0959810250 | 2.500 | 3.00 | 2.503 | 1.19 | 8.50 | 1.75 | 4.75 | 2.88 | 2.50 | 6.58 |
| 0959810300 | 3.000 | 3.00 | 3.003 | 1.31 | 9.50 | 2.00 | 5.25 | 3.13 | 3.00 | 7.50 |
| 0959810350 | 3.500 | 4.00 | 3.503 | 1.81 | 12.63 | 2.50[8] | 6.50[8] | 3.88 | 3.50 | 9.62 |
| 0959810400 | 4.000 | 4.50 | 4.003 | 2.06 | 14.88 | 3.00[8] | 7.50[8] | 4.38 | 4.06 | 11.45 |

[5] When used to mate with the Rod Clevis, select by pin diameter in the table above.
[6] Eye Brackets with pin diameters 0.500 thru 1.375 are forged steel. Eye Brackets with 0.312 and 1.750 pin diameter and larger are cast ductile iron.
[7] These dimensions vary from NFPA standard. F is increased by 0.13. Sufficient LR clearance remains for full swing arc with Parker cap clevis cylinders and rod clevises.
[8] Mounting base thickness dimension F is increased on these sizes to provide greater load capacity than the former fabricated steel design. Cast ductile iron dimensions F and FL are 0.81 larger for 3.500 pin diameter and 1.06 larger for 4.000 pin diameter.

View Table of Contents

### Rod End Accessories

Accessories offered for the rod end of the cylinder include Rod Clevis, Eye Bracket, Knuckle, Clevis Bracket, and Pivot Pin. To select the proper part number for any desired accessory, refer to the table below or on the opposite page and look in the row to the right of the rod thread in the first column. For economical accessory selection, it is recommended that rod end style 4 be specified on your cylinder order.

### Accessory Load Capacity

The various accessories have been load rated for your convenience. The Load Capacity in pounds is the recommended maximum load for that accessory based on a 4:1 design factor in tension. (Pivot Pin is rated in shear.) Before specifying, compare the actual load or the tension (pull) force at the maximum operating pressure of the cylinder with the load capacity of the accessory you plan to use. If load or pull force of cylinder exceeds load capacity of accessory, consult factory.

| Thread Size | Pin Ø | Knuckle | | Clevis Bracket | | | | Pivot Pin | |
|---|---|---|---|---|---|---|---|---|---|
| | | Part Number | Load Capacity (lb) | Forged Steel or Cast Ductile Iron | | Fabricated Steel | | Part Number | Shear Capacity (lb) |
| | | | | Part Number | Load Capacity (lb) | Part Number | Load Capacity (lb) | | |
| 5/16-24 | 0.438 | 0740750000 | 3,300 | 0960160044 | 2,830 | 0740760000 | 3,600 | 0740780000 | 6,600 |
| 7/16-20 | 0.500 | 0690890000 | 5,000 | 0960160050 | 7,740 | 0692050000 | 7,300 | 0683680000 | 8,600 |
| 1/2-20 | 0.500 | 0690900000 | 5,700 | 0960160050 | 7,740 | 0692050000 | 7,300 | 0683680000 | 8,600 |
| 3/4-16 | 0.750 | 0690910000 | 12,100 | 0960160075 | 13,600 | 0692060000 | 10,880 | 0683690000 | 19,300 |
| 7/8-14 | 1.000 | 0690920000 | 13,000 | 0960160100 | 23,000 | 0692070000 | 15,180 | 0683700000 | 34,300 |
| 1-14 | 1.000 | 0690930000 | 21,700 | 0960160100 | 23,000 | 0692070000 | 15,180 | 0683700000 | 34,300 |
| 1 1/4-12 | 1.375 | 0690940000 | 33,500 | 0960160138 | 39,500 | 0692080000 | 23,560 | 0683710000 | 65,000 |
| 1 1/2-12 | 1.750 | 0690950000 | 45,000 | 0960160175 | 49,480 | 0692090000 | 21,520 | 0683720000 | 105,200 |
| 1 3/4-12 | 2.000 | 0690960000 | 53,500 | 0960160200 | 72,400 | 0692100000 | 26,000 | 0692150000 | 137,400 |
| 1 7/8-12 | 2.000 | 0962160000 | 75,000 | 0960160200 | 72,400 | 0692100000 | 26,000 | 0692150000 | 137,400 |
| 2 1/4-12 | 2.500 | 0962170000 | 98,700 | 0960160250 | 98,700 | 0692110000 | 28,710 | 0683740000 | 214,700 |
| 2 1/2-12 | 3.000 | 0962180000 | 110,000 | 0960160300 | 123,300 | 0692120000 | 28,190 | 0683750000 | 309,200 |
| 2 3/4-12 | 3.000 | 0962190000 | 123,300 | N/A | N/A | 0692130000 | 31,390 | 0692160000 | 309,200 |
| 3 1/4-12 | 3.500 | 0962200000 | 161,300 | 0960160350 | 200,400 | 0735420000 | 80,250 | 0735450000 | 420,900 |
| 3 1/2-12 | 3.500 | 0962210000 | 217,300 | 0960160350 | 200,400 | 0735420000 | 80,250 | 0735450000 | 420,900 |
| 4-12 | 4.000 | 0962220000 | 273,800 | 0960160400 | 292,100 | 0735430000 | 98,420 | 0821810000 | 565,800 |
| N/A | 4.000 | N/A | N/A | N/A | N/A | N/A | N/A | 0735470000[1] | 565,800 |

[1] This size supplied with cotter pins.

## Forged Steel or Cast Ductile Iron Clevis Bracket Dimensions

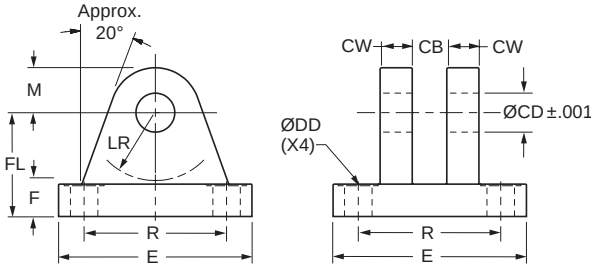


**Note: Cast ductile iron clevis brackets must not be welded in place.**

| Cast or Forged[2] Part Number | Pin Ø | CB | CD Ø | CW | DD Ø | E (As Cast) | F | FL | LR | M (As Cast) | R |
|---|---|---|---|---|---|---|---|---|---|---|---|
| 0960160044 | 0.438 | 0.46 | 0.440 | 0.37 | 0.27 | 2.25 | 0.38 | 1.00 | 0.56 | 0.44 | 1.75 |
| 0960160050 | 0.500 | 0.78 | 0.503 | 0.50 | 0.41 | 2.50 | 0.38 | 1.13 | 0.63 | 0.56 | 1.63 |
| 0960160075 | 0.750 | 1.28 | 0.753 | 0.63 | 0.53 | 3.50 | 0.63 | 1.88 | 1.06 | 0.75 | 2.56 |
| 0960160100 | 1.000 | 1.53 | 1.003 | 0.75 | 0.66 | 4.50 | 0.75 | 2.25 | 1.25 | 1.00 | 3.25 |
| 0960160138 | 1.375 | 2.03 | 1.378 | 1.00 | 0.66 | 5.00 | 0.88 | 3.00 | 1.94 | 1.38 | 3.81 |
| 0960160175 | 1.750 | 2.53 | 1.753 | 1.25 | 0.91 | 6.50 | 0.94 | 3.13 | 2.00 | 1.75 | 4.94 |
| 0960160200 | 2.000 | 2.53 | 2.003 | 1.25 | 1.06 | 7.50 | 1.38 | 3.75 | 2.25 | 2.00 | 5.75 |
| 0960160250 | 2.500 | 3.03 | 2.503 | 1.50 | 1.19 | 8.50 | 1.50 | 4.50 | 2.81 | 2.50 | 6.59 |
| 0960160300 | 3.000 | 3.03 | 3.003 | 1.50 | 1.31 | 9.50 | 1.88 | 5.38 | 3.31 | 3.00 | 7.50 |
| 0960160350 | 3.500 | 4.03 | 3.503 | 2.00 | 1.81 | 12.63 | 2.31 | 6.38 | 3.88 | 3.50 | 9.62 |
| 0960160400 | 4.000 | 4.53 | 4.003 | 2.25 | 2.06 | 14.88 | 2.88 | 7.50 | 4.50 | 4.00 | 11.50 |

[2] Clevis Brackets with pin diameters 0.500 thru 1.375 are forged steel. Clevis Brackets with 0.438 and 1.750 pin diameter and larger are cast ductile iron.

View Table of Contents

## Knuckle Dimensions

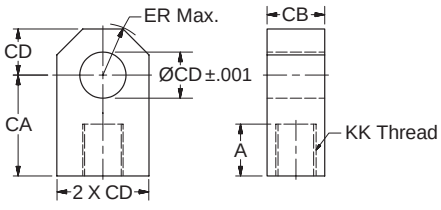


**Thread Size thru 1 3/4-12**

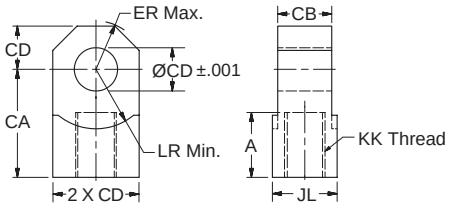


**Thread Size 1 7/8-12 & Larger**

| Part Number | Pin Ø | A | CA | CB | CD Ø | ER | JL | LR min | KK Thread |
|---|---|---|---|---|---|---|---|---|---|
| 0740750000 | 0.438 | 0.75 | 1.50 | 0.43 | 0.440 | 0.53 | – | – | 5/16-24 |
| 0690890000 | 0.500 | 0.75 | 1.50 | 0.75 | 0.503 | 0.59 | – | – | 7/16-20 |
| 0690900000 | 0.500 | 0.75 | 1.50 | 0.75 | 0.503 | 0.59 | – | – | 1/2-20 |
| 0690910000 | 0.750 | 1.13 | 2.06 | 1.25 | 0.753 | 0.87 | – | – | 3/4-16 |
| 0690920000 | 1.000 | 1.13 | 2.38 | 1.50 | 1.003 | 1.15 | – | – | 7/8-14 |
| 0690930000 | 1.000 | 1.63 | 2.81 | 1.50 | 1.003 | 1.15 | – | – | 1-14 |
| 0690940000 | 1.375 | 2.00 | 3.44 | 2.00 | 1.378 | 1.55 | – | – | 1 1/4-12 |
| 0690950000 | 1.750 | 2.25 | 4.00 | 2.50 | 1.753 | 1.96 | – | – | 1 1/2-12 |
| 0690960000 | 2.000 | 2.25 | 4.38 | 2.50 | 2.003 | 2.24 | – | – | 1 3/4-12 |
| 0962160000 | 2.000 | 3.00 | 5.00 | 2.50 | 2.003 | 2.24 | 3.00 | 2.77 | 1 7/8-12 |
| 0962170000 | 2.500 | 3.50 | 5.81 | 3.00 | 2.503 | 2.76 | 3.50 | 3.09 | 2 1/4-12 |
| 0962180000 | 3.000 | 3.50 | 6.13 | 3.00 | 3.003 | 3.30 | 4.00 | 3.58 | 2 1/2-12 |
| 0962190000 | 3.000 | 3.63 | 6.50 | 3.50 | 3.003 | 3.30 | 4.00 | 3.58 | 2 3/4-12 |
| 0962200000 | 3.500 | 4.50 | 7.63 | 4.00 | 3.503 | 3.87 | 6.00 | 4.18 | 3 1/4-12 |
| 0962210000 | 3.500 | 5.00 | 7.63 | 4.00 | 3.503 | 3.87 | 6.00 | 4.18 | 3 1/2-12 |
| 0962220000 | 4.000 | 5.50 | 9.13 | 4.50 | 4.003 | 4.43 | 6.00 | 4.80 | 4-12 |

## Pivot Pin Dimensions

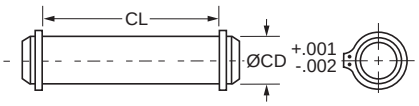


| Part Number | CD Ø | CL |
|---|---|---|
| 0740780000 | 0.438 | 1.31 |
| 0683680000 | 0.500 | 1.88 |
| 0683690000 | 0.750 | 2.63 |
| 0683700000 | 1.000 | 3.13 |
| 0683710000 | 1.375 | 4.19 |
| 0683720000 | 1.750 | 5.19 |
| 0692150000 | 2.000 | 5.69 |
| 0683740000 | 2.500 | 6.19 |
| 0683750000 | 3.000 | 6.25 |
| 0692160000 | 3.000 | 6.75 |
| 0735450000 | 3.500 | 8.25 |
| 0821810000 | 4.000 | 8.69 |
| 0735470000[1] | 4.000 | 9.00 |

[1]This size supplied with cotter pins.

1. Pivot Pins are furnished with Clevis Mounted Cylinders as standard.
2. Pivot Pins are furnished with (2) Retainer Rings.
3. Pivot Pins must be ordered as a separate item if to be used with Knuckles, Rod Clevises, or Clevis Brackets.

## Fabricated Steel Clevis Bracket Dimensions

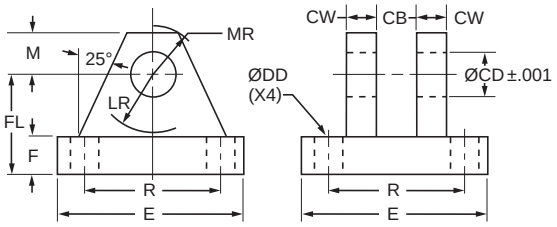


| Fabricated Steel Part Number | Pin[2] Ø | CB | CD Ø | CW | DD Ø | E | F | FL | LR | M | MR | R |
|---|---|---|---|---|---|---|---|---|---|---|---|---|
| 0692050000 | 0.500 | 0.80 | 0.503 | 0.50 | 0.41 | 3.50 | 0.50 | 1.50 | 0.75 | 0.50 | 0.63 | 2.55 |
| 0692060000 | 0.750 | 1.30 | 0.753 | 0.63 | 0.53 | 5.00 | 0.63 | 1.88 | 1.19 | 0.75 | 0.91 | 3.82 |
| 0692070000 | 1.000 | 1.59 | 1.003 | 0.75 | 0.66 | 6.50 | 0.75 | 2.25 | 1.50 | 1.00 | 1.25 | 4.95 |
| 0692080000 | 1.375 | 2.09 | 1.378 | 1.00 | 0.66 | 7.50 | 0.88 | 3.00 | 2.00 | 1.38 | 1.66 | 5.73 |
| 0692090000 | 1.750 | 2.59 | 1.753 | 1.25 | 0.91 | 9.50 | 0.88 | 3.63 | 2.75 | 1.75 | 2.22 | 7.50 |
| 0692100000 | 2.000 | 2.59 | 2.003 | 1.50 | 1.06 | 12.75 | 1.00 | 4.25 | 3.19 | 2.25 | 2.78 | 9.40 |
| 0692110000 | 2.500 | 3.09 | 2.503 | 1.50 | 1.19 | 12.75 | 1.00 | 4.50 | 3.50 | 2.50 | 3.13 | 9.40 |
| 0692120000 | 3.000 | 3.09 | 3.003 | 1.50 | 1.31 | 12.75 | 1.00 | 6.00 | 4.25 | 3.00 | 3.59 | 9.40 |
| 0692130000 | 3.000 | 3.59 | 3.003 | 1.50 | 1.31 | 12.75 | 1.00 | 6.00 | 4.25 | 3.00 | 3.59 | 9.40 |
| 0735420000 | 3.500 | 4.09 | 3.503 | 2.00 | 1.81 | 15.50 | 1.69 | 6.69 | 5.00 | 3.50 | 4.13 | 12.00 |
| 0735430000 | 4.000 | 4.59 | 4.003 | 2.00 | 2.06 | 17.50 | 1.94 | 7.69 | 5.75 | 4.00 | 4.88 | 13.75 |

[2] Clevis Bracket for 0.438 diameter pin is only available in cast ductile iron construction. See part number 0960160044 on previous page.

View Table of Contents

Parker offers a complete range of Cylinder Accessories to assure you of the greatest versatility in present or future cylinder applications. Accessories offered for spherical bearing mount cylinders include the Rod Eye, Pivot Pin and Clevis Bracket. To select the proper part number for any desired accessory refer to the tables below.

## Spherical Rod Eye Dimensions

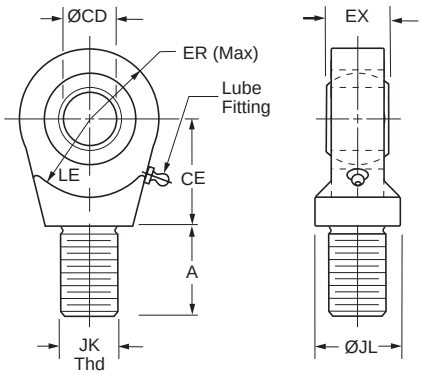


| Bore Ø | Part Number | CD Ø | A | CE | EX | ER | LE | JK Thread | JL Ø | Load Capacity (lb) |
|---|---|---|---|---|---|---|---|---|---|---|
| 1.50 | 0961000050 | .5000-0005 | 0.72 | 0.86 | 0.44 | 0.80 | 0.78 | 7/16-20 | 0.88 | 2,644 |
| 2.00 & 2.50 | 0961000075 | .7500-0005 | 1.02 | 1.25 | 0.66 | 1.14 | 1.06 | 3/4-16 | 1.31 | 9,441 |
| 3.25 | 0961000100 | 1.0000-0005 | 1.52 | 1.88 | 0.88 | 1.34 | 1.45 | 1-14 | 1.50 | 16,860 |
| 4.00 | 0961000138 | 1.3750-0005 | 2.02 | 2.13 | 1.19 | 1.67 | 1.91 | 1 1/4-12 | 2.00 | 28,562 |
| 5.00 | 0961000175 | 1.7500-0005 | 2.14 | 2.50 | 1.53 | 2.05 | 2.16 | 1 1/2-12 | 2.00 | 43,005 |
| 6.00 | 0961000200 | 2.0000-0005 | 2.89 | 2.75 | 1.75 | 2.60 | 2.50 | 1 7/8-12 | 2.75 | 70,193 |

Order to fit Piston Rod Thread Size.

## Pivot Pin Dimensions

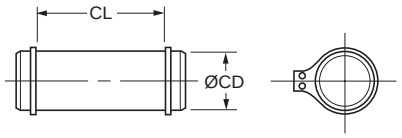


| Bore Ø | Part Number | CD Ø | CL | Shear Capacity (lb) |
|---|---|---|---|---|
| 1.50 | 0839620000 | .4997-0004 | 1.56 | 8,600 |
| 2.00 & 2.50 | 0839630000 | .7497-0005 | 2.03 | 19,300 |
| 3.25 | 0839640000 | .9997-0005 | 2.50 | 34,300 |
| 4.00 | 0839650000 | 1.3746-0006 | 3.31 | 65,000 |
| 5.00 | 0839660000 | 1.7496-0006 | 4.22 | 105,200 |
| 6.00 | 0839670000 | 1.9996-0007 | 4.94 | 137,400 |

Pivot Pins are furnished with (2) Retainer Rings.

## Clevis Bracket Dimensions

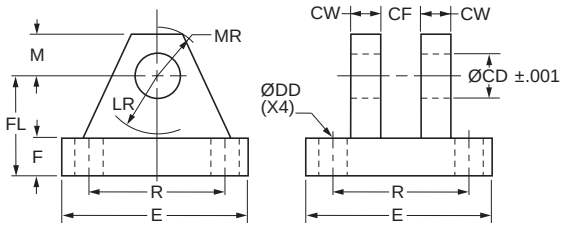


**Fabricated Steel**

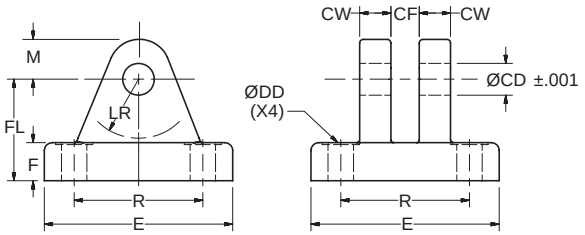


**Cast Ductile Iron**

Order to fit Cylinder Cap or Rod Eye.

| Bore Ø | Pin Ø | Cast Ductile Iron Part Number | Fabricated Steel Part Number | CD Ø | CF | CW | DD Ø | E | F | FL | LR | M | MR | R | Load Capacity (lb) |
|---|---|---|---|---|---|---|---|---|---|---|---|---|---|---|---|
| 1.50 | 0.500 | 0959450000 | 0839470000 | 0.503 | 0.45 | 0.50 | 0.41 | 3.00 | 0.50 | 1.50 | 0.94 | 0.50 | 0.63 | 2.05 | 5,770 |
| 2.00 & 2.50 | 0.750 | 0959300000 | 0839480000 | 0.753 | 0.67 | 0.63 | 0.53 | 3.75 | 0.63 | 2.00 | 1.38 | 0.88 | 1.00 | 2.76 | 9,450 |
| 3.25 | 1.000 | 0959310000 | 0839490000 | 1.003 | 0.89 | 0.75 | 0.53 | 5.50 | 0.75 | 2.50 | 1.69 | 1.00 | 1.19 | 4.10 | 14,300 |
| 4.00 | 1.375 | 0959320000 | 0839500000 | 1.378 | 1.20 | 1 .00 | 0.66 | 6.50 | 0.88 | 3.50 | 2.44 | 1.38 | 1.63 | 4.95 | 20,322 |
| 5.00 | 1.750 | 0959330000 | 0839510000 | 1.753 | 1.55 | 1.25 | 0.91 | 8.50 | 1.25 | 4.50 | 2.88 | 1.75 | 2.06 | 6.58 | 37,800 |
| 6.00 | 2.000 | 0959340000 | 0839520000 | 2.003 | 1.77 | 1.50 | 0.91 | 10.63 | 1.50 | 5.00 | 3.00 | 2.00 | 2.38 | 7.92 | 50,375 |

View Table of Contents

Parker offers a complete range of Cylinder Accessories to assure you of the greatest versatility in present or future cylinder applications. Accessories offered for spherical bearing mount cylinders include the Rod Eye, Pivot Pin and Clevis Bracket. To select the proper part number for any desired accessory refer to the tables below.

## Spherical Rod Eye Dimensions

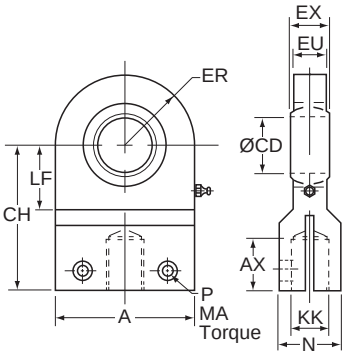


| Bore Ø | Part Number | A | AX (min.) | CH | CD Ø | ER | EU | EX | KK Thread | LF | MA (lb-ft) | N | P (SHCS) | Load Cap. (lb) |
|---|---|---|---|---|---|---|---|---|---|---|---|---|---|---|
| 1.50 | 0978200075 | 1.75 | 0.75 | 1.75 | $0.7500^{-0.0005}$ | 0.88 | 0.56 | 0.656 | 1/2-20 | 0.94 | 8.3 | 0.88 | 1/4-28 | 5,301 |
| 2.00 | 0978200100 | 2.50 | 1.13 | 2.50 | $1.0000^{-0.0005}$ | 1.25 | 0.75 | 0.875 | 7/8-14 | 1.19 | 30 | 1.25 | 3/8-24 | 9,425 |
| 2.50 | 0978200125 | 3.00 | 1.13 | 2.75 | $1.2500^{-0.0005}$ | 1.50 | 0.94 | 1.093 | 7/8-14 | 1.44 | 30 | 1.38 | 3/8-24 | 14,726 |
| 3.25 | 0978200150 | 4.00 | 1.63 | 3.75 | $1.5000^{-0.0005}$ | 2.00 | 1.13 | 1.312 | 1 1/4-12 | 1.75 | 75 | 2.00 | 1/2-20 | 24,887 |
| 4.00 | 0978200200 | 4.50 | 2.00 | 4.50 | $2.0000^{-0.0005}$ | 2.25 | 1.50 | 1.750 | 1 1/2-12 | 2.25 | 139 | 2.50 | 5/8-18 | 37,699 |
| 5.00 | 0978200250 | 6.00 | 2.25 | 5.25 | $2.5000^{-0.0005}$ | 3.00 | 1.88 | 2.187 | 1 3/4-12 | 2.81 | 248 | 2.75 | 3/4-16 | 58,905 |
| 6.00 | 0978200300 | 7.00 | 3.00 | 6.75 | $3.0000^{-0.0005}$ | 3.50 | 2.25 | 2.625 | 2 1/4-12 | 3.31 | 398 | 3.50 | 7/8-14 | 84,823 |
| 7.00 | 0978200350 | 8.00 | 3.50 | 8.00 | $3.5000^{-0.0005}$ | 4.00 | 2.63 | 3.062 | 2 3/4-12 | 3.94 | 600 | 4.50 | 1-14 | 115,454 |
| 8.00 | 0978200400 | 9.00 | 3.50 | 8.50 | $4.0000^{-0.0005}$ | 4.50 | 3.00 | 3.500 | 3 1/4-12 | 4.50 | 600 | 5.00 | 1-14 | 150,796 |

Order to fit Piston Rod Thread Size.

## Pivot Pin Dimensions

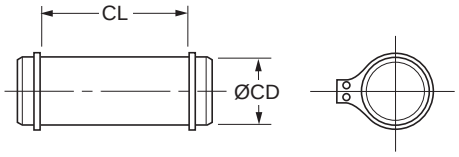


Pivot Pins are furnished with (2) Retainer Rings.

| Bore Ø | Pin Ø | Part Number | CD Ø | CL | Shear Capacity (lb) |
|---|---|---|---|---|---|
| 1.50 | 0.750 | 0839630000 | $0.7497^{-0.0005}$ | 2.03 | 19,300 |
| 2.00 | 1.000 | 0839640000 | $0.9997^{-0.0005}$ | 2.50 | 34,300 |
| 2.50 | 1.250 | 0977260125 | $1.2496^{-0.0006}$ | 3.00 | 53,600 |
| 3.25 | 1.500 | 0977260150 | $1.4996^{-0.0006}$ | 4.00 | 77,300 |
| 4.00 | 2.000 | 0839670000 | $1.9996^{-0.0007}$ | 4.94 | 137,400 |
| 5.00 | 2.500 | 0977260250 | $2.4996^{-0.0007}$ | 5.88 | 214,700 |
| 6.00 | 3.000 | 0977260300 | $2.9996^{-0.0007}$ | 6.31 | 309,100 |
| 7.00 | 3.500 | 0977260350 | $3.4995^{-0.0008}$ | 7.25 | 420,700 |
| 8.00 | 4.000 | 0977260400 | $3.9995^{-0.0008}$ | 8.69 | 549,400 |

## Clevis Bracket Dimensions

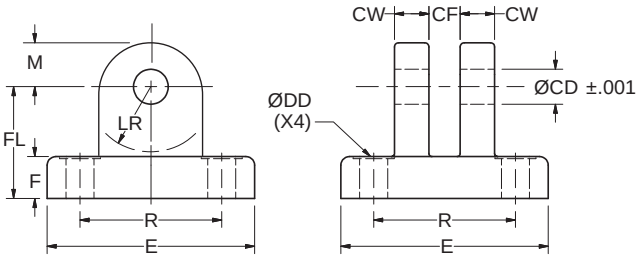


Order to fit Cylinder Cap or Rod Eye.

**Fabricated Steel**

| Bore Ø | Pin Ø | Part Number | CD Ø ±0.001 | CF | CW | DD Ø | E | F | FL | LR | M | R | Load Capacity (lb) |
|---|---|---|---|---|---|---|---|---|---|---|---|---|---|
| 1.50 | 0.750 | 0977270075 | 0.753 | 0.67 | 0.50 | 0.41 | 2.75 | 0.38 | 1.63 | 1.06 | 0.63 | 2.00 | 5,301 |
| 2.00 | 1.000 | 0977270100 | 1.003 | 0.89 | 0.50 | 0.47 | 3.25 | 0.50 | 2.00 | 1.31 | 0.81 | 2.44 | 9,425 |
| 2.50 | 1.250 | 0977270125 | 1.253 | 1.11 | 0.63 | 0.53 | 4.00 | 0.75 | 2.50 | 1.56 | 1.00 | 3.00 | 14,726 |
| 3.25 | 1.500 | 0977270150 | 1.503 | 1.33 | 0.75 | 0.66 | 5.00 | 0.75 | 3.00 | 2.06 | 1.25 | 3.75 | 24,887 |
| 4.00 | 2.000 | 0977270200 | 2.003 | 1.77 | 1.00 | 0.66 | 5.50 | 1.00 | 3.50 | 2.31 | 1.63 | 4.31 | 37,699 |
| 5.00 | 2.500 | 0977270250 | 2.503 | 2.20 | 1.25 | 0.91 | 7.00 | 1.25 | 4.50 | 3.06 | 2.00 | 5.44 | 58,905 |
| 6.00 | 3.000 | 0977270300 | 3.003 | 2.64 | 1.25 | 1.06 | 8.25 | 1.50 | 5.25 | 3.56 | 2.50 | 6.38 | 84,823 |
| 7.00 | 3.500 | 0977270350 | 3.503 | 3.08 | 1.50 | 1.19 | 9.25 | 1.75 | 6.00 | 4.06 | 3.00 | 7.38 | 115,454 |
| 8.00 | 4.000 | 0977270400 | 4.003 | 3.52 | 1.50 | 1.31 | 10.50 | 2.00 | 6.75 | 4.56 | 3.50 | 8.50 | 150,796 |

View Table of Contents

# Linear Alignment Couplers are available in 19 standard thread sizes...

## Cost Saving Features and Benefits Include

- Maximum reliability for trouble-free operation, long life and lower operating costs
- Increased cylinder life by reducing wear on Piston and Rod bearings
- Simplifying Cylinder installation and reducing assembly costs
- Increase Rod Bearing and Rod Seal life for lower maintenance costs

## Alignment Coupler

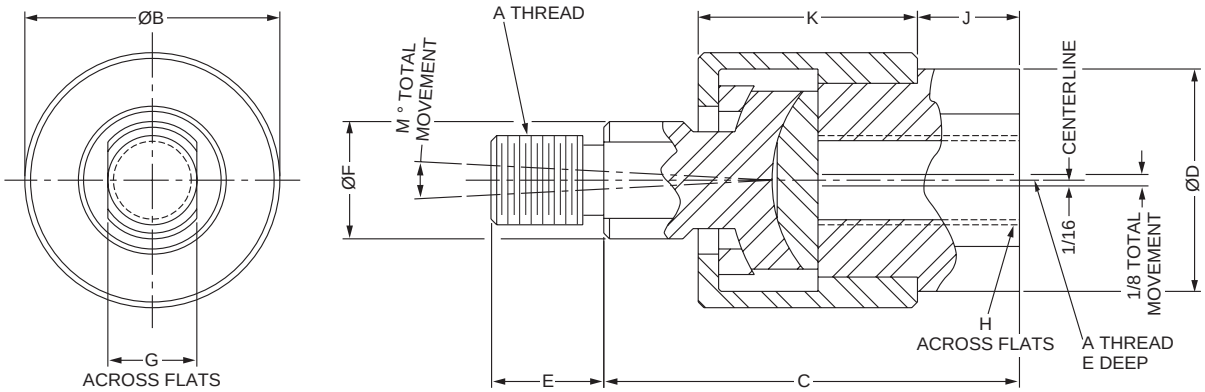


### Part Numbers and Dimensions

| Part Number | A | B Ø | C | D Ø | E | F Ø | G | H | J | K | M | Max. Pull Load (lb) | Max. Approx. Weight (lb) |
|---|---|---|---|---|---|---|---|---|---|---|---|---|---|
| 1347570031 | 5/16-24 | 1.13 | 1.75 | 0.94 | 0.50 | 0.50 | 0.38 | 0.75 | 0.38 | 0.94 | 6° | 1,200 | .35 |
| 1347570038 | 3/8-24 | 1.13 | 1.75 | 0.94 | 0.50 | 0.50 | 0.38 | 0.75 | 0.38 | 0.94 | 6° | 2,425 | .35 |
| 1347570044 | 7/16-20 | 1.38 | 2.00 | 1.13 | 0.75 | 0.63 | 0.50 | 0.88 | 0.38 | 1.09 | 6° | 3,250 | .55 |
| 1347570050 | 1/2-20 | 1.38 | 2.00 | 1.13 | 0.75 | 0.63 | 0.50 | 0.88 | 0.38 | 1.09 | 6° | 4,450 | .55 |
| 1347570063 | 5/8-18 | 1.38 | 2.00 | 1.13 | 0.75 | 0.63 | 0.50 | 0.88 | 0.38 | 1.09 | 6° | 6,800 | .55 |
| 1347570075 | 3/4-16 | 2.00 | 2.31 | 1.63 | 1.13 | 0.94 | 0.75 | 1.31 | 0.44 | 1.28 | 6° | 9,050 | 1.4 |
| 1347570088 | 7/8-14 | 2.00 | 2.31 | 1.63 | 1.13 | 0.94 | 0.75 | 1.31 | 0.44 | 1.28 | 6° | 14,450 | 1.4 |
| 1347570100 | 1-14 | 3.13 | 3.00 | 2.38 | 1.63 | 1.44 | 1.25 | 1.88 | 0.75 | 1.78 | 6° | 19,425 | 4.8 |
| 1347570125 | 1 1/4-12 | 3.13 | 3.00 | 2.38 | 1.63 | 1.44 | 1.25 | 1.88 | 0.75 | 1.78 | 6° | 30,500 | 4.8 |
| 1337390125 | 1 1/4-12 | 3.50 | 4.00 | 2.00 | 2.00 | 1.50 | 1.25 | 1.69 | 0.75 | 2.50 | 10° | 30,500 | 6.9 |
| 1337390150 | 1 1/2-12 | 4.00 | 4.38 | 2.25 | 2.25 | 1.75 | 1.50 | 1.94 | 0.88 | 2.75 | 10° | 45,750 | 9.8 |
| 1337390175 | 1 3/4-12 | 4.00 | 4.38 | 2.25 | 2.25 | 1.75 | 1.50 | 1.94 | 0.88 | 2.75 | 10° | 58,350 | 9.8 |
| 1337390188 | 1 7/8-12 | 5.00 | 5.63 | 3.00 | 3.00 | 2.25 | 2.00 | 2.63 | 1.38 | 3.38 | 10° | 67,550 | 19.8 |
| 1337390200 | 2-12 | 5.00 | 5.63 | 3.00 | 3.00 | 2.25 | 2.00 | 2.63 | 1.38 | 3.38 | 10° | 77,450 | 19.8 |
| 1337390225 | 2 1/4-12 | 6.75 | 6.38 | 3.25 | 3.50 | 2.75 | 2.38 | 2.88 | 1.63 | 3.75 | 10° | 99,250 | 35.3 |
| 1337390250 | 2 1/2-12 | 7.00 | 6.50 | 4.00 | 3.50 | 3.25 | 2.88 | 3.38 | 1.63 | 3.88 | 10° | 123,750 | 45.3 |
| 1337390275 | 2 3/4-12 | 7.00 | 6.50 | 4.00 | 3.50 | 3.25 | 2.88 | 3.38 | 1.63 | 3.88 | 10° | 150,950 | 45.3 |
| 1337390300 | 3-12 | 7.00 | 6.50 | 4.00 | 3.50 | 3.25 | 2.88 | 3.38 | 1.63 | 3.88 | 10° | 180,850 | 45.3 |
| 1337390325 | 3 1/4-12 | 9.25 | 8.50 | 5.25 | 4.50 | 4.00 | 3.38 | 4.50 | 2.00 | 5.50 | 10° | 213,450 | – |
| 1337390425 | 4 1/4-12 | 12.88 | 11.25 | 7.75 | 4.50 | 5.50 | 4.88 | 7.00 | 1.50 | 8.75 | 10° | 370,850 | – |

**How to Order Linear Alignment Couplers —** When ordering a cylinder with a threaded male rod end, specify the coupler of equal thread size by part number as listed in Table 1, i.e.; Piston Rod “KK” or “CC” dimension is 3/4" - 16", specify coupler part number 1347570075.

View Table of Contents

# Split Couplers and Weld Plates
## for Parker "Style 55" Piston Rod End

| Rod Ø | A Ø | B Ø | C | D | E Ø | F | Bolt Size | Bolt Circle | Split Coupler Part Number | Weld Plate Part Number |
|---|---|---|---|---|---|---|---|---|---|---|
| 0.625 | 1.50 | 2.00 | 0.50 | 0.56 | 0.25 | 4 | #10-24 x .94 LG | 1.125 | 1472340062 | 1481740062 |
| 1.000 | 2.00 | 2.50 | 0.50 | 0.88 | 0.25 | 6 | .250-20 x 1.25 LG | 1.500 | 1472340100 | 1481740100 |
| 1.375 | 2.50 | 3.00 | 0.63 | 1.00 | 0.25 | 6 | .312-18 x 1.50 LG | 2.000 | 1472340138 | 1481740138 |
| 1.750 | 3.00 | 4.00 | 0.63 | 1.25 | 0.25 | 8 | .312-18 x 1.75 LG | 2.375 | 1472340175 | 1481740175 |
| 2.000 | 3.50 | 4.00 | 0.75 | 1.63 | 0.38 | 12 | .375-16 x 2.25 LG | 2.687 | 1472340200 | 1481740200 |
| 2.500 | 4.00 | 4.50 | 0.75 | 1.88 | 0.38 | 12 | .375-16 x 2.50 LG | 3.187 | 1472340250 | 1481740250 |
| 3.000 | 5.00 | 5.50 | 1.00 | 2.38 | 0.38 | 12 | .500-13 x 3.25 LG | 4.000 | 1472340300 | 1481740300 |
| 3.500 | 5.88 | 7.00 | 1.00 | 2.63 | 0.38 | 12 | .625-11 x 3.50 LG | 4.687 | 1472340350 | 1481740350 |
| 4.000 | 6.38 | 7.00 | 1.00 | 2.63 | 0.38 | 12 | .625-11 x 3.50 LG | 5.187 | 1472340400 | 1481740400 |
| 4.500 | 6.88 | 8.00 | 1.00 | 3.13 | 0.38 | 12 | .625-11 x 4.00 LG | 5.687 | 1472340450 | 1481740450 |
| 5.000 | 7.38 | 8.00 | 1.00 | 3.13 | 0.38 | 12 | .625-11 x 4.00 LG | 6.187 | 1472340500 | 1481740500 |
| 5.500 | 8.25 | 9.00 | 1.25 | 3.88 | 0.38 | 12 | .750-10 x 5.00 LG | 6.875 | 1472340550 | 1481740550 |
| 7.000 | 10.38 | 11.00 | 1.75 | 4.00 | 0.50 | 12 | 1.00-8 x 5.50 LG | 8.750 | 1472340700 | 1481740700 |
| 8.000 | 11.38 | 12.00 | 2.00 | 4.00 | 0.50 | 16 | 1.00-8 x 5.50 LG | 9.750 | 1472340800 | 1481740800 |
| 9.000 | 13.12 | 14.00 | 2.25 | 4.00 | 0.50 | 12 | 1.25-7 x 6.00 LG | 11.125 | 1472340900 | 1481740900 |
| 10.000 | 14.12 | 15.00 | 2.50 | 4.50 | 0.50 | 16 | 1.25-7 x 6.50 LG | 12.125 | 1472341000 | 1481741000 |

Note: Bolts are not included with split coupler or weld plate.

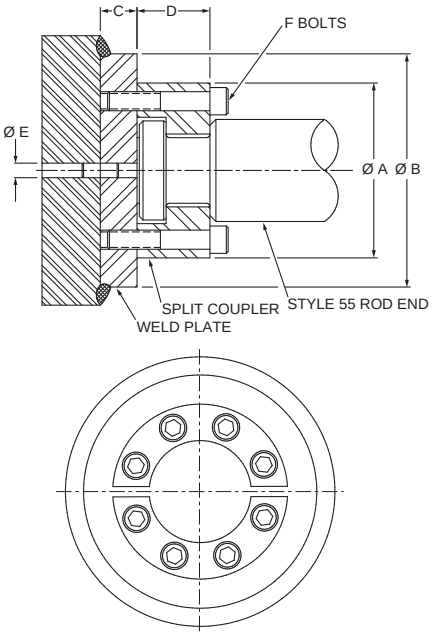


⚠**WARNING:** Piston rod separation from the machine member can result in severe personal injury or even death to nearby personnel. The cylinder user must make sure the weld holding the weld plate to the machine is of sufficient quality and size to hold the intended load. The cylinder user must also make sure the bolts holding split coupler to the weld plate are of sufficient strength to hold the intended load and installed in such a way that they will not become loose during the machine's operation.

# Dual Axis Knuckles

Using a Dual Axis Knuckle permits increased angular movement from the cylinder center line. Clevis or Eye mounted cylinders often require movement beyond the plane that two pivot pins allow. Spherical bearing mounts permit angular movement up to 4.5° within the pivoting plane. A Dual Axis Knuckle, with two pin holes 90° apart, installed at the cap and rod end of a mounting style BB cylinder adds two pivot points, thereby providing up to 30° movement in another plane at each end.

## Maximum Achievable Angular Movement from Cylinder Centerline[1]

**Inboard Pin -** 15° maximum movement for cylinder misalignment only.

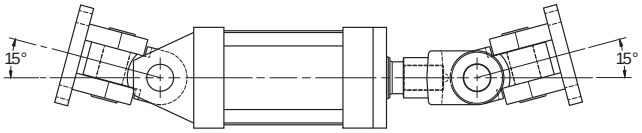


**Outboard Pin -** 30° maximum movement when applying force to a load moving in a curved plane.

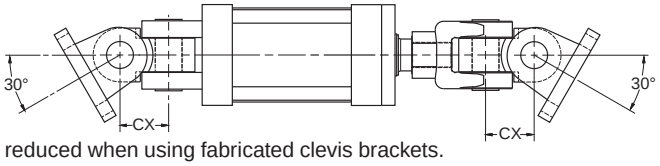


[1] Maximum movement is achieved with cast clevis brackets. Movement is reduced when using fabricated clevis brackets.

## Dual Axis Knuckle Dimensions and Usage

| Part Number | Pin Ø | Load Cap. (lb) | CB | CD Ø | CX | LE | LR | MR | Mating Parts | | BB Mount Usage by Series & Bore |
|---|---|---|---|---|---|---|---|---|---|---|---|
| | | | | | | | | | Clevis Bracket | Rod Clevis | 2H, 2HD, 2HB |
| 0952670000 | 0.500 | 4,380 | 0.75 | 0.503 | 0.88 | 0.54 | 0.63 | 0.50 | 0960160050 | 0509400000, 0509410000 | 1.50 |
| 0952680000 | 0.750 | 12,370 | 1.25 | 0.753 | 1.19 | 0.80 | 0.94 | 0.75 | 0960160075 | 0509420000, 1332840000 | 2.00, 2.50 |
| 0952690000 | 1.000 | 20,500 | 1.50 | 1.003 | 1.69 | 1.05 | 1.22 | 1.00 | 0960160100 | 0509430000, 0509440000, 1332850000 | 3.25 |
| 0952700000 | 1.375 | 30,500 | 2.00 | 1.378 | 2.38 | 1.44 | 1.69 | 1.38 | 0960160138 | 0509450000, 1332860000 | 4.00 |
| 0952710000 | 1.750 | 49,500 | 2.50 | 1.753 | 3.06 | 1.81 | 2.19 | 1.75 | 0960160175 | 0509460000 | 5.00 |
| 0952720000 | 2.000 | 68,000 | 2.50 | 2.003 | 3.63 | 2.09 | 2.44 | 2.00 | 0960160200 | 0509470000, 0509480000 | 6.00 |

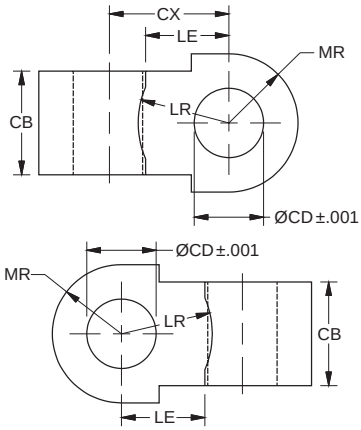

View Table of Contents

## 1.50" - 6.00" Bore Series 2H

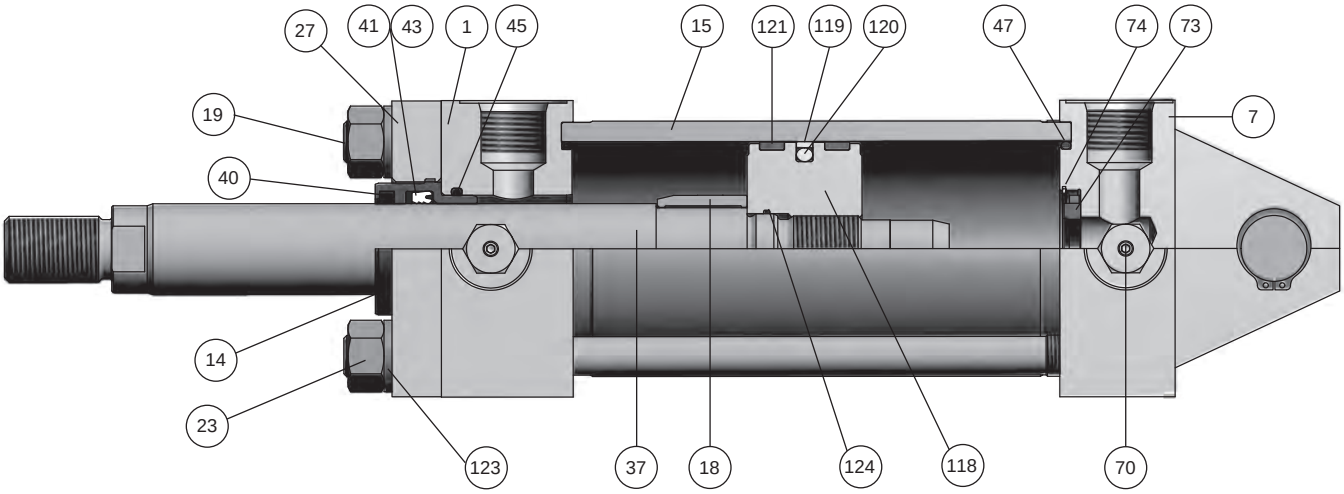


## 1.50" - 6.00" Bore Series 2HD

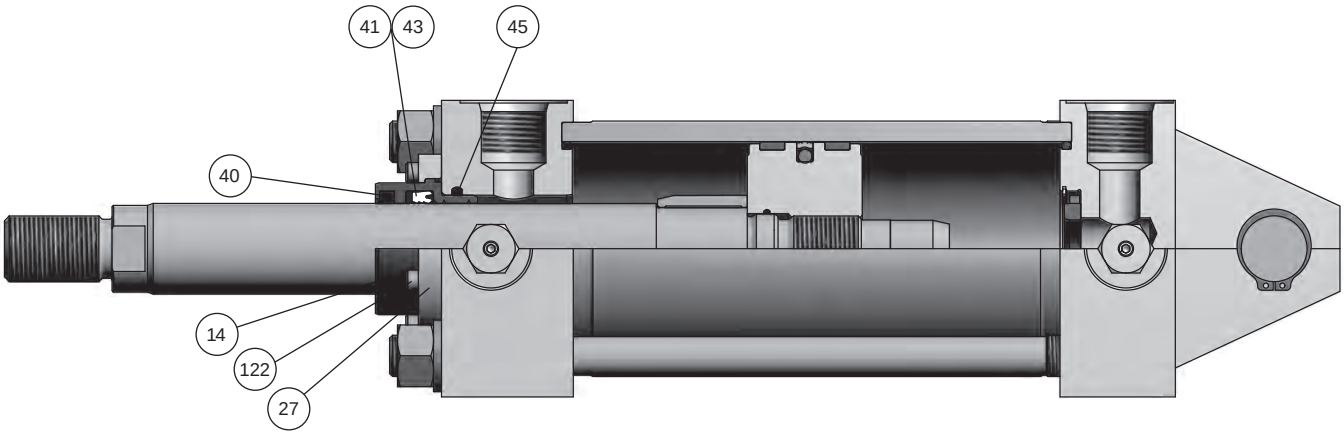




### Piston and Rod Assemblies

Factory assembled piston and rod assemblies (that include seals for piston type specified) are recommended.

### Parts List — 1.50" through 6.00" Bore

| Symbol | Description |
|---|---|
| 1 | Head |
| 7 | Cap |
| 14 | Rod Gland |
| 15 | Cylinder Body |
| 18 | Cushion Sleeve, head end cushion |
| 19 | Tie Rod |
| 23 | Tie Rod Nut |
| 27 | Retainer |
| 37 | Piston Rod, single rod type |
| 40 | Rod Wiper |
| 41 | Rod Seal |
| 43 | Back-up Washer, rod seal |

| Symbol | Description |
|---|---|
| 45 | Gland O-Ring |
| 47 | O-Ring, cylinder tube to head and cap seal |
| 70 | Needle Valve, cushion adjustment cartridge |
| 73 | Bushing, float check, cushion on cap end |
| 74 | Retaining Ring, float check cushion bushing |
| 118 | Piston |
| 119 | Piston Seal |
| 120 | Piston Seal Energizer |
| 121 | Wear Ring |
| 122 | Retainer Bolt |
| 123 | Washer, tie rod nut |
| 124 | O-Ring, piston to rod seal |

View Table of Contents

## 1.50" - 6.00" Bore Series 2HB

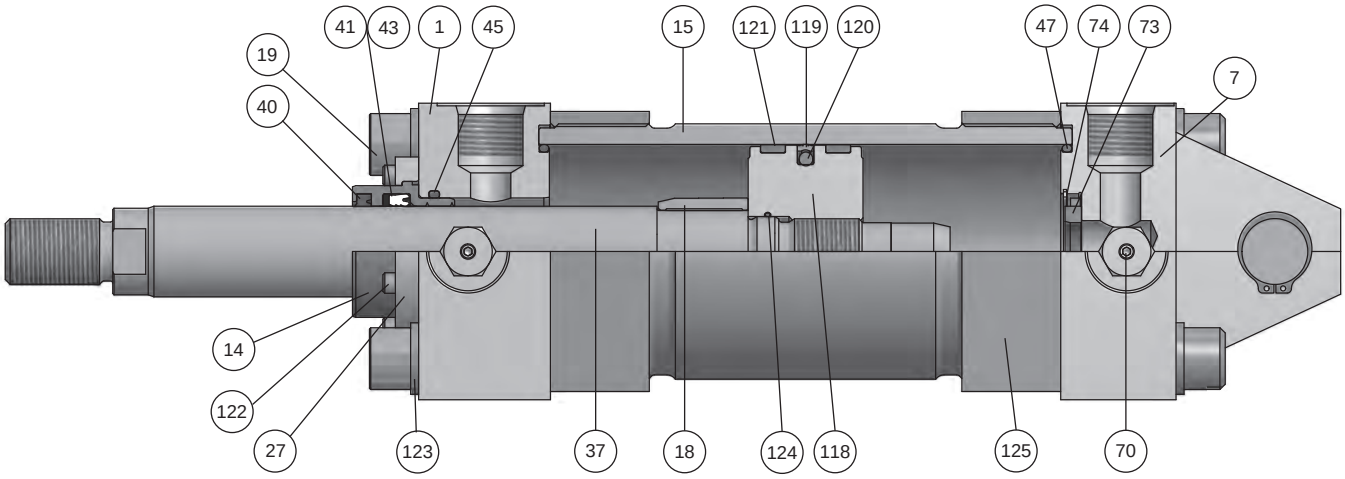


### Piston and Rod Assemblies

Factory assembled piston and rod assemblies (that include seals for piston type specified) are recommended.

### Parts List — 1.50" through 6.00" Bore

| Symbol | Description |
|---|---|
| 1 | Head |
| 7 | Cap |
| 14 | Rod Gland |
| 15 | Cylinder Body |
| 18 | Cushion Sleeve, head end cushion |
| 19 | Tie Bolt |
| 27 | Retainer |
| 37 | Piston Rod, single rod type |
| 40 | Rod Wiper |
| 41 | Rod Seal |
| 43 | Back-up Washer, rod seal |
| 45 | Gland O-Ring |

| Symbol | Description |
|---|---|
| 47 | O-Ring, cylinder tube to head and cap seal |
| 70 | Needle Valve, cushion adjustment cartridge |
| 73 | Bushing, float check, cushion on cap end |
| 74 | Retaining Ring, float check cushion bushing |
| 118 | Piston |
| 119 | Piston Seal |
| 120 | Piston Seal Energizer |
| 121 | Wear Ring |
| 122 | Retainer Bolt |
| 123 | Washer, tie bolt |
| 124 | O-Ring, piston to rod seal |
| 125 | Body Flange |

View Table of Contents

## Series 2H Gland Cartridge Kits and Rod Seal Kits

| Rod Ø | Seal Type | | | | | | | | | |
|---|---|---|---|---|---|---|---|---|---|---|
| | Class 1 Service (Polyurethane & Nitrile) | | Class 3 Service (EPR) | | Class 5 Service (FKM) | | Class 2 & 6 Service (Nitroxile) | | Class 8 Service (Filled PTFE & Fluorocarbon) | |
| | Contains 1 ea. Sym. #14, 40, 41 & 45 | | Contains 1 ea. Sym. #14, 40, 41 & 45 | | Contains 1 ea. Sym. #14, 40, 41 & 45 | | Contains 1 ea. Sym. #14, 40, 41 & 45 | | Contains 1 ea. Sym. #14, 40, 41 & 45 | |
| | Gland Cartridge Kits | Rod Seal Kits[1] | Gland Cartridge Kits | Rod Seal Kits[1] | Gland Cartridge Kits | Rod Seal Kits[1] | Gland Cartridge Kits | Rod Seal Kits[1] | Gland Cartridge Kits | Rod Seal Kits[1] |
| 0.625 | RG2HLG2061 | RK2HLG2061 | RG2AHLG063 | RK2AHLG063 | RG2AHLG065 | RK2AHLG065 | RG2AHLG062 | RK2AHLG062 | N/A | N/A |
| 1.000 | RG2HLG2101 | RK2HLG2101 | RG2AHLG103 | RK2AHLG103 | RG2AHLG105 | RK2AHLG105 | RG2AHLG102 | RK2AHLG102 | RG2AHLG108 | RK2AHLG108 |
| 1.375 | RG2HLG2131 | RK2HLG2131 | RG2AHLG133 | RK2AHLG133 | RG2AHLG135 | RK2AHLG135 | RG2AHLG132 | RK2AHLG132 | RG2AHLG138 | RK2AHLG138 |
| 1.750 | RG2HLG2171 | RK2HLG2171 | RG2AHLG173 | RK2AHLG173 | RG2AHLG175 | RK2AHLG175 | RG2AHLG172 | RK2AHLG172 | RG2AHLG178 | RK2AHLG178 |
| 2.000 | RG2HLG2201 | RK2HLG2201 | RG2AHLG203 | RK2AHLG203 | RG2AHLG205 | RK2AHLG205 | RG2AHLG202 | RK2AHLG202 | RG2AHLG208 | RK2AHLG208 |
| 2.500 | RG2HLG2251 | RK2HLG2251 | RG2AHLG253 | RK2AHLG253 | RG2AHLG255 | RK2AHLG255 | RG2AHLG252 | RK2AHLG252 | RG2AHLG258 | RK2AHLG258 |
| 3.000 | RG2HLG2301 | RK2HLG2301 | RG2AHLG303 | RK2AHLG303 | RG2AHLG305 | RK2AHLG305 | RG2AHLG302 | RK2AHLG302 | RG2AHLG308 | RK2AHLG308 |
| 3.500 | RG2HLG2351 | RK2HLG2351 | RG2AHLG353 | RK2AHLG353 | RG2AHLG355 | RK2AHLG355 | RG2AHLG352 | RK2AHLG352 | RG2AHLG358 | RK2AHLG358 |
| 4.000 | RG2HLG2401 | RK2HLG2401 | RG2AHLG403 | RK2AHLG403 | RG2AHLG405 | RK2AHLG405 | RG2AHLG402 | RK2AHLG402 | RG2AHLG408 | RK2AHLG408 |

[1] Rod Seal Kits do not include Sym. #14

## Series 2HD & 2HB Gland Cartridge Kits and Rod Seal Kits

| Rod Ø | Seal Type | | | | | | | | | |
|---|---|---|---|---|---|---|---|---|---|---|
| | Class 1 Service (Polyurethane & Nitrile) | | Class 3 Service (EPR) | | Class 5 Service (FKM) | | Class 2 & 6 Service (Nitroxile) | | Class 8 Service (Filled PTFE & Fluorocarbon) | |
| | Contains 1 ea. Sym. #14, 40, 41 & 45 | | Contains 1 ea. Sym. #14, 40, 41 & 45 | | Contains 1 ea. Sym. #14, 40, 41 & 45 | | Contains 1 ea. Sym. #14, 40, 41 & 45 | | Contains 1 ea. Sym. #14, 40, 41 & 45 | |
| | Gland Cartridge Kits | Rod Seal Kits[1] | Gland Cartridge Kits | Rod Seal Kits[1] | Gland Cartridge Kits | Rod Seal Kits[1] | Gland Cartridge Kits | Rod Seal Kits[1] | Gland Cartridge Kits | Rod Seal Kits[1] |
| 0.625 | RG2HDG2061 | RK2HDG2061 | RG2HDG2063 | RK2HDG2063 | RG2HDG2065 | RK2HDG2065 | RG2HDG2062 | RK2HDG2062 | N/A | N/A |
| 1.000 | RG2HDG2101 | RK2HDG2101 | RG2HDG2103 | RK2HDG2103 | RG2HDG2105 | RK2HDG2105 | RG2HDG2102 | RK2HDG2102 | RG2HDG2108 | RK2AHLG108 |
| 1.375 | RG2HDG2131 | RK2HDG2131 | RG2HDG2133 | RK2HDG2133 | RG2HDG2135 | RK2HDG2135 | RG2HDG2132 | RK2HDG2132 | RG2HDG2138 | RK2AHLG138 |
| 1.750 | RG2HDG2171 | RK2HDG2171 | RG2HDG2173 | RK2HDG2173 | RG2HDG2175 | RK2HDG2175 | RG2HDG2172 | RK2HDG2172 | RG2HDG2178 | RK2AHLG178 |
| 2.000 | RG2HDG2201 | RK2HDG2201 | RG2HDG2203 | RK2HDG2203 | RG2HDG2205 | RK2HDG2205 | RG2HDG2202 | RK2HDG2202 | RG2HDG2208 | RK2AHLG208 |
| 2.500 | RG2HDG2251 | RK2HDG2251 | RG2HDG2253 | RK2HDG2253 | RG2HDG2255 | RK2HDG2255 | RG2HDG2252 | RK2HDG2252 | RG2HDG2258 | RK2AHLG258 |
| 3.000 | RG2HDG2301 | RK2HDG2301 | RG2HDG2303 | RK2HDG2303 | RG2HDG2305 | RK2HDG2305 | RG2HDG2302 | RK2HDG2302 | RG2HDG2308 | RK2AHLG308 |
| 3.500 | RG2HDG2351 | RK2HDG2351 | RG2HDG2353 | RK2HDG2353 | RG2HDG2355 | RK2HDG2355 | RG2HDG2352 | RK2HDG2352 | RG2HDG2358 | RK2AHLG358 |
| 4.000 | RG2HDG2401 | RK2HDG2401 | RG2HDG2403 | RK2HDG2403 | RG2HDG2405 | RK2HDG2405 | RG2HDG2402 | RK2HDG2402 | RG2HDG2408 | RK2AHLG408 |

[1] Rod Seal Kits do not include Sym. #14

## Series 2HD & 2HB / 3HD & 3HB Crown Wiper Gland Cartridge Kits and Rod Seal Kits

| Rod Ø | Seal Type | | | | Retainer Bolt Torque (Torque values are for bolts installed with lubrication) |
|---|---|---|---|---|---|
| | Class 1 Service (Polyurethane & Nitrile) | | Class 5 Service (FKM) | | |
| | Contains 1 ea. Sym. #14, 40, 41 & 45 | | Contains 1 ea. Sym. #14, 40, 41 & 45 | | |
| | Crown Wiper Gland Cartridge Kits | Crown Wiper Rod Seal Kits[2] | Crown Wiper Gland Cartridge Kits | Crown Wiper Rod Seal Kits[2] | |
| 0.625 | RGCW2HG061 | RKCW2HG061 | RGCW2HG065 | RKCW2HG065 | 40 - 42 lb-in |
| 1.000 | RGCW2HG101 | RKCW2HG101 | RGCW2HG105 | RKCW2HG105 | 40 - 42 lb-in |
| 1.375 | RGCW2HG131 | RKCW2HG131 | RGCW2HG135 | RKCW2HG135 | 56 - 58 lb-in |
| 1.750 | RGCW2HG171 | RKCW2HG171 | RGCW2HG175 | RKCW2HG175 | 56 - 58 lb-in |
| 2.000 | RGCW2HG201 | RKCW2HG201 | RGCW2HG205 | RKCW2HG205 | 11 - 12 ft-lb |
| 2.500 | RGCW2HG251 | RKCW2HG251 | RGCW2HG255 | RKCW2HG255 | 11 - 12 ft-lb |
| 3.000 | RGCW2HG301 | RKCW2HG301 | RGCW2HG305 | RKCW2HG305 | 23 - 25 ft-lb |
| 3.500 | RGCW2HG351 | RKCW2HG351 | RGCW2HG355 | RKCW2HG355 | 23 - 25 ft-lb |
| 4.000 | RGCW2HG401 | RKCW2HG401 | RGCW2HG405 | RKCW2HG405 | 41 - 43 ft-lb |
| 4.500 | RGCW2HG451 | RKCW2HG451 | RGCW2HG455 | RKCW2HG455 | 41 - 43 ft-lb |
| 5.000 | RGCW2HG501 | RKCW2HG501 | RGCW2HG505 | RKCW2HG505 | 41 - 43 ft-lb |
| 5.500 | RGCW2HG551 | RKCW2HG551 | RGCW2HG555 | RKCW2HG555 | 41 - 43 ft-lb |

[2] Rod Seal Kits do not include Sym. #14

## 2H, 2HD & 2B Rod Gland Cartridge Kit and Rod Seal Kit Parts Identification

- Gland Cartridge Kits contain items 14, 40, 41 and 45 (43 in class 2, 5 & 6 kits only)
- Rod Seal Kits contain items 40, 41 and 45 (43 in class 2, 5 & 6 kits only)

**Series 2H**

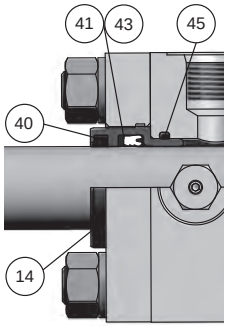


**Series 2HD & 2HB**

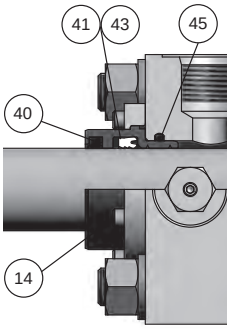

View Table of Contents

## Piston Seal Kits – Series 2H / 2HD / 2HB – Includes cylinder body end seals

| Piston Seal Code | Piston Magnet Code | Seal Class | Bore Diameter<br>Kits include two each of items 47 & 121 (one of item 121 for magnetic piston) and one each of items 119[1] & 120. | | | | | | |
|---|---|---|---|---|---|---|---|---|---|
| | | | **1.50** | **2.00** | **2.50** | **3.25** | **4.00** | **5.00** | **6.00** |
| H | N | 1 | PK152HH001 | PK202HH001 | PK252HH001 | PK322HH001 | PK402HH001 | PK502HH001 | PK602HH001 |
| H | 3, 7 | 1 | PK152HHM01 | PK202HHM01 | PK252HHM01 | PK322HHM01 | PK402HHM01 | PK502HHM01 | PK602HHM01 |
| H | N | 4 | PK152HH004 | PK202HH004 | PK252HH004 | PK322HH004 | PK402HH004 | PK502HH004 | PK602HH004 |
| H | 3, 7 | 4 | PK152HHM04 | PK202HHM04 | PK252HHM04 | PK322HHM04 | PK402HHM04 | PK502HHM04 | PK602HHM04 |
| K | N | 1 | PK152HF001 | PK202HF001 | PK252HF001 | PK322HF001 | PK402HF001 | PK502HF001 | PK602HF001 |
| K | N | 2 ,6 | PK152HF002 | PK202HF002 | PK252HF002 | PK322HF002 | PK402HF002 | PK502HF002 | PK602HF002 |
| K | 3, 7 | 1 | PK152HFM01 | PK202HFM01 | PK252HFM01 | PK322HFM01 | PK402HFM01 | PK502HFM01 | PK602HFM01 |
| K | 3, 7 | 2 ,6 | PK152HFM02 | PK202HFM02 | PK252HFM02 | PK322HFM02 | PK402HFM02 | PK502HFM02 | PK602HFM02 |
| K | N | 3 | PK152HF003 | PK202HF003 | PK252HF003 | PK322HF003 | PK402HF003 | PK502HF003 | PK602HF003 |
| K | 3, 7 | 3 | PK152HFM03 | PK202HFM03 | PK252HFM03 | PK322HFM03 | PK402HFM03 | PK502HFM03 | PK602HFM03 |
| K | N | 4 | PK152HF004 | PK202HF004 | PK252HF004 | PK322HF004 | PK402HF004 | PK502HF004 | PK602HF004 |
| K | 3, 7 | 4 | PK152HFM04 | PK202HFM04 | PK252HFM04 | PK322HFM04 | PK402HFM04 | PK502HFM04 | PK602HFM04 |
| K | N | 5 | PK152HF005 | PK202HF005 | PK252HF005 | PK322HF005 | PK402HF005 | PK502HF005 | PK602HF005 |
| K | N | 8 | PK152HF008 | PK202HF008 | PK252HF008 | PK322HF008 | PK402HF008 | PK502HF008 | PK602HF008 |
| K | 3, 7 | 5 | PK152HFM05 | PK202HFM05 | PK252HFM05 | PK322HFM05 | PK402HFM05 | PK502HFM05 | PK602HFM05 |
| R | N | 1 | PK152HR001 | PK202HR001 | PK252HR001 | PK322HR001 | PK402HR001 | PK502HR001 | PK602HR001 |
| R | N | 2 ,6 | PK152HR002 | PK202HR002 | PK252HR002 | PK322HR002 | PK402HR002 | PK502HR002 | PK602HR002 |
| R | 3, 7 | 1 | PK152HRM01 | PK202HRM01 | PK252HRM01 | PK322HRM01 | PK402HRM01 | PK502HRM01 | PK602HRM01 |
| R | 3, 7 | 2 ,6 | PK152HRM02 | PK202HRM02 | PK252HRM02 | PK322HRM02 | PK402HRM02 | PK502HRM02 | PK602HRM02 |
| R | N | 3 | PK152HR003 | PK202HR003 | PK252HR003 | PK322HR003 | PK402HR003 | PK502HR003 | PK602HR003 |
| R | 3, 7 | 3 | PK152HRM03 | PK202HRM03 | PK252HRM03 | PK322HRM03 | PK402HRM03 | PK502HRM03 | PK602HRM03 |
| R | N | 4 | PK152HR004 | PK202HR004 | PK252HR004 | PK322HR004 | PK402HR004 | PK502HR004 | PK602HR004 |
| R | 3, 7 | 4 | PK152HRM04 | PK202HRM04 | PK252HRM04 | PK322HRM04 | PK402HRM04 | PK502HRM04 | PK602HRM04 |
| R | N | 5 | PK152HR005 | PK202HR005 | PK252HR005 | PK322HR005 | PK402HR005 | PK502HR005 | PK602HR005 |
| R | 3, 7 | 5 | PK152HRM05 | PK202HRM05 | PK252HRM05 | PK322HRM05 | PK402HRM05 | PK502HRM05 | PK602HRM05 |
| W | N | 1 | PK152HW001 | PK202HW001 | PK252HW001 | PK322HW001 | PK402HW001 | PK502HW001 | PK602HW001 |
| W | N | 2 ,6 | PK152HW002 | PK202HW002 | PK252HW002 | PK322HW002 | PK402HW002 | PK502HW002 | PK602HW002 |
| W | 3, 7 | 1 | PK152HWM01 | PK202HWM01 | PK252HWM01 | PK322HWM01 | PK402HWM01 | PK502HWM01 | PK602HWM01 |
| W | 3, 7 | 2 ,6 | PK152HWM02 | PK202HWM02 | PK252HWM02 | PK322HWM02 | PK402HWM02 | PK502HWM02 | PK602HWM02 |
| W | N | 3 | PK152HW003 | PK202HW003 | PK252HW003 | PK322HW003 | PK402HW003 | PK502HW003 | PK602HW003 |
| W | 3, 7 | 3 | PK152HWM03 | PK202HWM03 | PK252HWM03 | PK322HWM03 | PK402HWM03 | PK502HWM03 | PK602HWM03 |
| W | N | 5 | PK152HW005 | PK202HW005 | PK252HW005 | PK322HW005 | PK402HW005 | PK502HW005 | PK602HW005 |
| W | 3, 7 | 5 | PK152HWM05 | PK202HWM05 | PK252HWM05 | PK322HWM05 | PK402HWM05 | PK502HWM05 | PK602HWM05 |
| **2H / 2HD Tie Rod Torque and 2HB Tie Bolt Torque** | | | **1.50** | **2.00** | **2.50** | **3.25** | **4.00** | **5.00** | **6.00** |
| | | | 18 - 19 lb-ft | 45 - 49 lb-ft | 45 - 49 lb-ft | 120 - 124 lb-ft | 131 - 135 lb-ft | 312 - 316 lb-ft | 528 - 544 lb-ft |

Note: The tie rod torque values are for cylinders rated at 3,000 psi. Consult the factory for torque values for cylinders rated above 3,000 psi

[1] Item 119 for piston style WP (model number code W) includes both the PTFE primary seal and the redundant quad ring seal.

[2] The 1.50" bore WP seal groove is unique and not universal to the other seal styles. Changing an existing 1.50" bore cylinder either from or to a WP piston seal requires that a new piston and rod assembly be ordered.

**HP Piston**

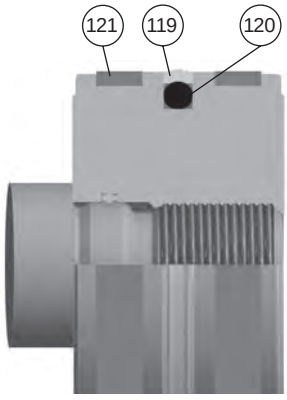


**KP Piston**

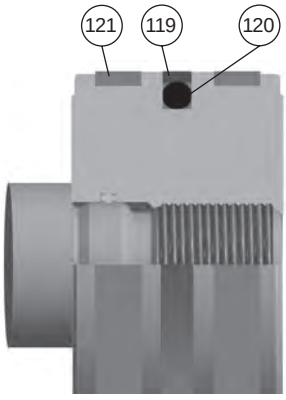


**RP Piston**

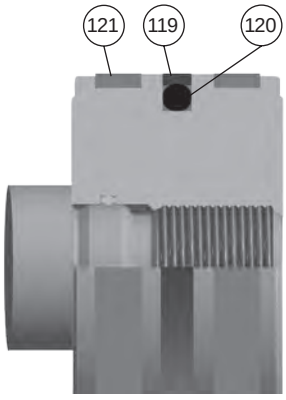


**WP Piston**

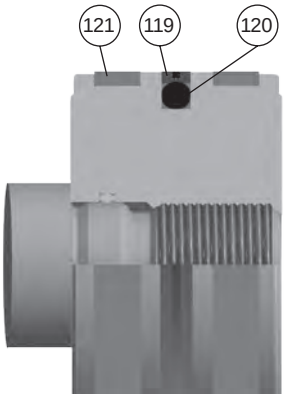


Note: Item 47, cylinder body end seal, is not shown.

View Table of Contents

## 7.00" & 8.00" Bore Series 3H

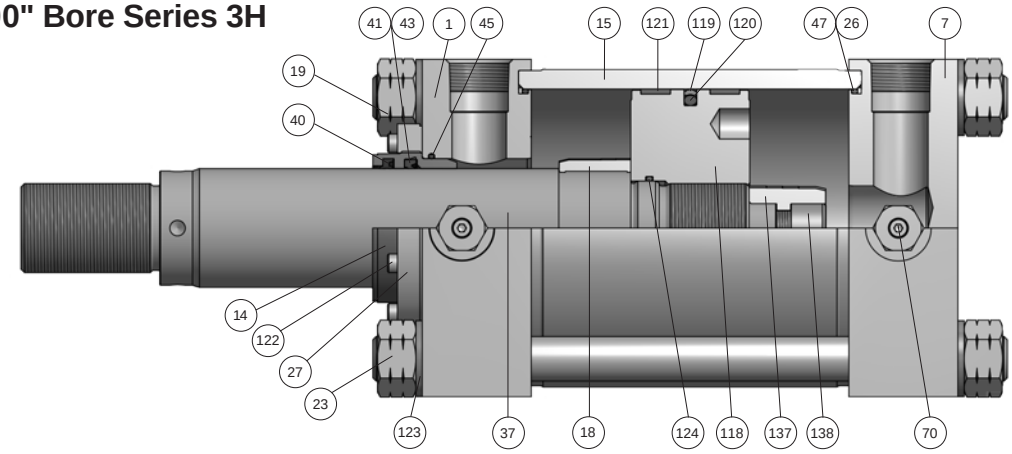


## 7.00" & 8.00" Bore Series 3HD

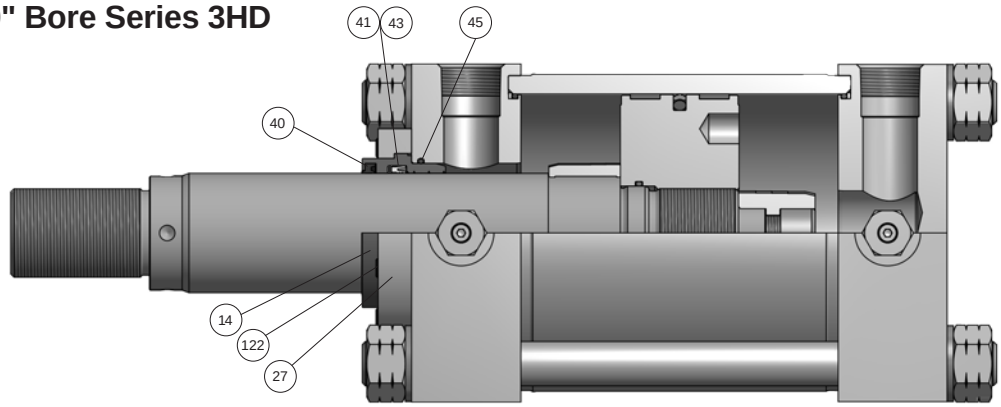


## 7.00" & 8.00" Bore Series 3HB

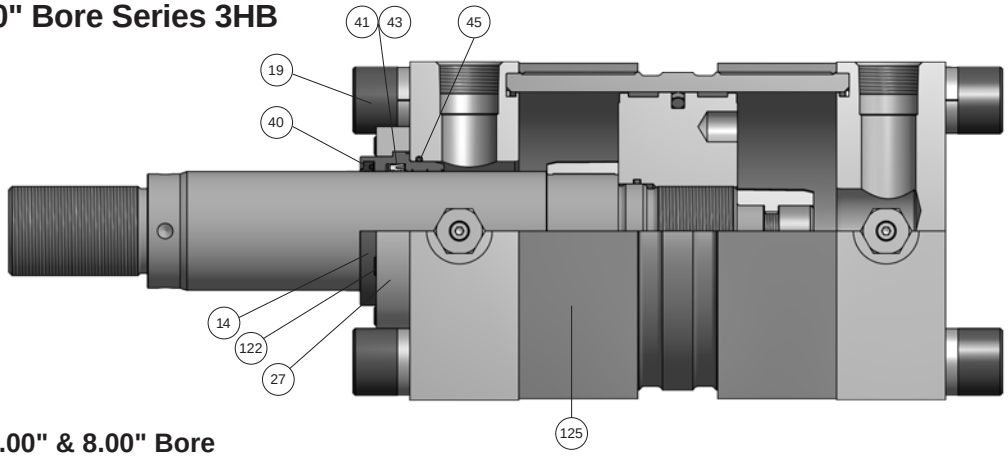


### Parts List – 7.00" & 8.00" Bore

| Symbol | Description |
|---|---|
| 1 | Head |
| 7 | Cap |
| 14 | Rod Gland |
| 15 | Cylinder Body |
| 18 | Cushion Sleeve, head end cushion |
| 19 | Tie Rod or Tie Bolt |
| 23 | Tie Rod Nut |
| 26 | Back-up Washer, tube end seal |
| 27 | Retainer |
| 37 | Piston Rod, single rod type |
| 40 | Rod Wiper |
| 41 | Rod Seal |
| 43 | Back-up Washer, rod seal |

| Symbol | Description |
|---|---|
| 45 | Gland O-Ring |
| 47 | O-Ring, cylinder tube to head and cap seal |
| 70 | Needle Valve, cushion adjustment cartridge |
| 118 | Piston |
| 119 | Piston Seal |
| 120 | Piston Seal Energizer |
| 121 | Wear Ring |
| 122 | Retainer Bolt |
| 123 | Washer, tie rod or tie bolt |
| 124 | O-Ring, piston to rod seal |
| 125 | Body Flange |
| 137 | Cushion Spear, detachable |
| 138 | Bolt, cushion spear |

View Table of Contents

## Series 3H – 7.00" & 8.00" Bore Gland Cartridge Kits and Rod Seal Kits

| Rod Ø | Seal Type | | | | | | | | | |
|---|---|---|---|---|---|---|---|---|---|---|
| | Class 1 Service (Polyurethane & Nitrile) | | Class 3 Service (EPR) | | Class 5 Service (FKM) | | Class 2 & 6 Service (Nitroxile) | | Class 8 Service (Filled PTFE & Fluorocarbon) | |
| | Contains 1 ea. Sym. #14, 40, 41 & 45 | | Contains 1 ea. Sym. #14, 40, 41 & 45 | | Contains 1 ea. Sym. #14, 40, 41 & 45 | | Contains 1 ea. Sym. #14, 40, 41 & 45 | | Contains 1 ea. Sym. #14, 40, 41 & 45 | |
| | Gland Cartridge Kits | Rod Seal Kits[1] | Gland Cartridge Kits | Rod Seal Kits[1] | Gland Cartridge Kits | Rod Seal Kits[1] | Gland Cartridge Kits | Rod Seal Kits[1] | Gland Cartridge Kits | Rod Seal Kits[1] |
| 3.000 | RG2HLG2301 | RK2HLG2301 | RG2AHLG303 | RK2AHLG303 | RG2AHLG305 | RK2AHLG305 | RG2AHLG302 | RK2AHLG302 | RG2AHLG308 | RK2AHLG308 |
| 3.500 | RG2HLG2351 | RK2HLG2351 | RG2AHLG353 | RK2AHLG353 | RG2AHLG355 | RK2AHLG355 | RG2AHLG352 | RK2AHLG352 | RG2AHLG358 | RK2AHLG358 |
| 4.000 | RG2HLG2401 | RK2HLG2401 | RG2AHLG403 | RK2AHLG403 | RG2AHLG405 | RK2AHLG405 | RG2AHLG402 | RK2AHLG402 | RG2AHLG408 | RK2AHLG408 |
| 4.500 | RG2HLG2451 | RK2HLG2451 | RG2AHLG453 | RK2AHLG453 | RG2AHLG455 | RK2AHLG455 | RG2AHLG452 | RK2AHLG452 | RG2AHLG458 | RK2AHLG458 |
| 5.000 | RG2HLG2501 | RK2HLG2501 | RG2AHLG503 | RK2AHLG503 | RG2AHLG505 | RK2AHLG505 | RG2AHLG502 | RK2AHLG502 | RG2AHLG508 | RK2AHLG508 |
| 5.500 | RG2HLG2551 | RK2HLG2551 | RG2AHLG553 | RK2AHLG553 | RG2AHLG555 | RK2AHLG555 | RG2AHLG552 | RK2AHLG552 | RG2AHLG558 | RK2AHLG558 |

[1] Rod Seal Kits do not include Sym. #14

## Series 3HD & 3HB – 7.00" & 8.00" Bore Gland Cartridge Kits and Rod Seal Kits

| Rod Ø | Seal Type | | | | | | | | | |
|---|---|---|---|---|---|---|---|---|---|---|
| | Class 1 Service (Polyurethane & Nitrile) | | Class 3 Service (EPR) | | Class 5 Service (FKM) | | Class 2 & 6 Service (Nitroxile) | | Class 8 Service (Filled PTFE & Fluorocarbon) | |
| | Contains 1 ea. Sym. #14, 40, 41 & 45 | | Contains 1 ea. Sym. #14, 40, 41 & 45 | | Contains 1 ea. Sym. #14, 40, 41 & 45 | | Contains 1 ea. Sym. #14, 40, 41 & 45 | | Contains 1 ea. Sym. #14, 40, 41 & 45 | |
| | Gland Cartridge Kits | Rod Seal Kits[1] | Gland Cartridge Kits | Rod Seal Kits[1] | Gland Cartridge Kits | Rod Seal Kits[1] | Gland Cartridge Kits | Rod Seal Kits[1] | Gland Cartridge Kits | Rod Seal Kits[1] |
| 3.000 | RG2HDG2301 | RK2HDG2301 | RG2HDG2303 | RK2HDG2303 | RG2HDG2305 | RK2HDG2305 | RG2HDG2302 | RK2HDG2302 | RG2HDG2308 | RK2AHLG308 |
| 3.500 | RG2HDG2351 | RK2HDG2351 | RG2HDG2353 | RK2HDG2353 | RG2HDG2355 | RK2HDG2355 | RG2HDG2352 | RK2HDG2352 | RG2HDG2358 | RK2AHLG358 |
| 4.000 | RG2HDG2401 | RK2HDG2401 | RG2HDG2403 | RK2HDG2403 | RG2HDG2405 | RK2HDG2405 | RG2HDG2402 | RK2HDG2402 | RG2HDG2408 | RK2AHLG408 |
| 4.500 | RG2HDG2451 | RK2HDG2451 | RG2HDG2453 | RK2HDG2453 | RG2HDG2455 | RK2HDG2455 | RG2HDG2452 | RK2HDG2452 | RG2HDG2458 | RK2AHLG458 |
| 5.000 | RG2HDG2501 | RK2HDG2501 | RG2HDG2503 | RK2HDG2503 | RG2HDG2505 | RK2HDG2505 | RG2HDG2502 | RK2HDG2502 | RG2HDG2508 | RK2AHLG508 |
| 5.500 | RG2HDG2551 | RK2HDG2551 | RG2HDG2553 | RK2HDG2553 | RG2HDG2555 | RK2HDG2555 | RG2HDG2552 | RK2HDG2552 | RG2HDG2558 | RK2AHLG558 |

[1] Rod Seal Kits do not include Sym. #14

## Piston Seal Kits – Series 3H / 3HD / 3HB – Includes cylinder body end seals

| Piston Seal Code | Piston Magnet Code | Seal Class | Bore Diameter Kits include two each of items 47 & 121 and one each of items 1191 & 120. | | Piston Seal Code | Piston Magnet Code | Seal Class | Bore Diameter Kits include two each of items 47 & 121 and one each of items 1191 & 120. | |
|---|---|---|---|---|---|---|---|---|---|
| | | | 7.00 | 8.00 | | | | 7.00 | 8.00 |
| H | N | 1 | PK703HH001 | PK803HH001 | R | N | 1 | PK703HR001 | PK803HR001 |
| H | N | 4 | PK703HH004 | PK803HH004 | R | N | 2, 6 | PK703HR002 | PK803HR002 |
| K | N | 1 | PK703HF001 | PK803HF001 | R | N | 3 | PK703HR003 | PK803HR003 |
| K | N | 2, 6 | PK703HF002 | PK803HF002 | R | N | 4 | PK703HR004 | PK803HR004 |
| K | N | 3 | PK703HF003 | PK803HF003 | R | N | 5 | PK703HR005 | PK803HR005 |
| K | N | 4 | PK703HF004 | PK803HF004 | W | N | 1 | PK703HW001 | PK803HW001 |
| K | N | 5 | PK703HF005 | PK803HF005 | W | N | 2, 6 | PK703HW002 | PK803HW002 |
| K | N | 8 | PK703HF008 | PK803HF008 | W | N | 3 | PK703HW003 | PK803HW003 |
| **3H / 3HD Tie Rod Torque and 3HB Tie Bolt Torque** | | | **7.00** | **8.00** | W | N | 5 | PK703HW005 | PK803HW005 |
| | | | 800 - 816 lb-ft | 1168 - 1184 lb-ft | **3H / 3HD Tie Rod Torque and 3HB Tie Bolt Torque** | | | **7.00** | **8.00** |
| | | | | | | | | 800 - 816 lb-ft | 1168 - 1184 lb-ft |

Note: The tie rod torque values are for cylinders rated at 3,000 psi.
Consult the factory for torque values for cylinders rated above 3,000 psi

[1] Item 119 for piston style WP (model number code W) includes both the PTFE primary seal and the redundant quad ring seal.

View Table of Contents

## 10.00" - 20.00" Bore Series 3H

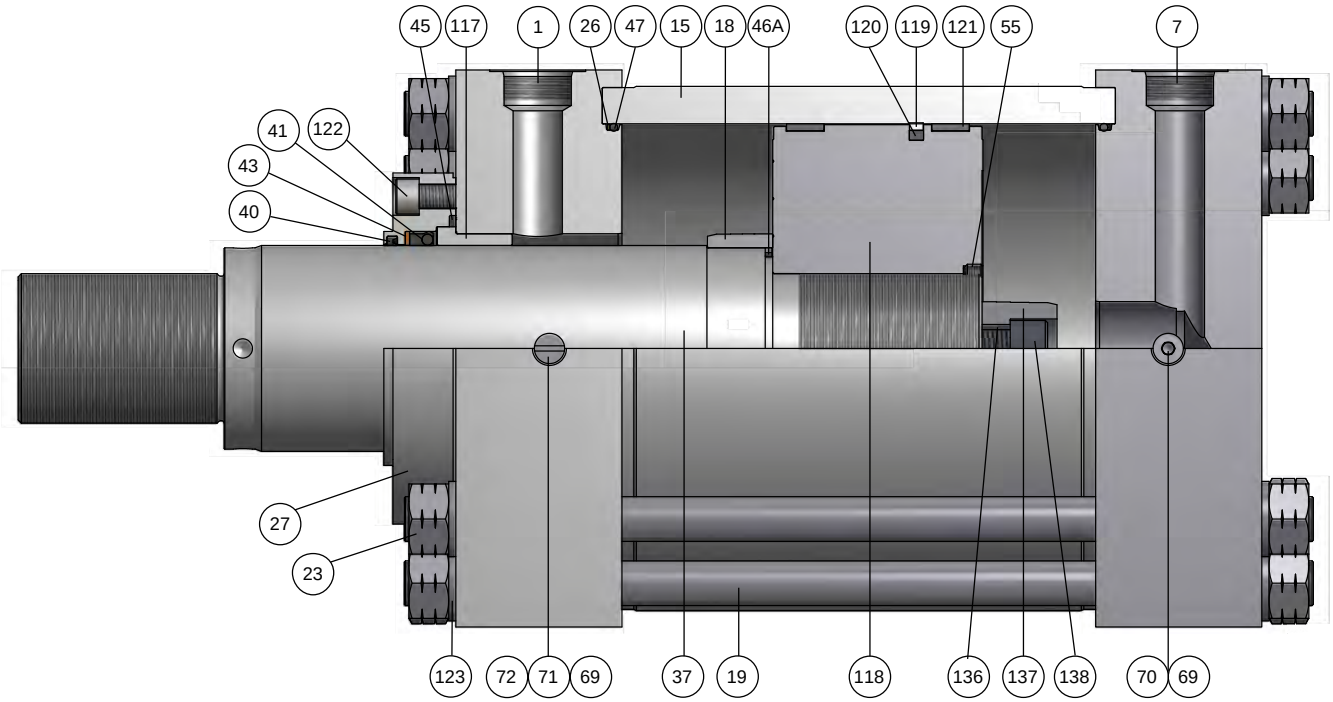


| Symbol | Description |
|---|---|
| 1 | Head |
| 7 | Cap |
| 15 | Cylinder Body |
| 18 | Cushion Sleeve, head end cushion |
| 19 | Tie Rod |
| 23 | Tie Rod Nut |
| 26 | Back-up Washer, tube end seal |
| 27 | Retainer |
| 37 | Piston Rod, single rod type |
| 40 | Rod Wiperseal |
| 41 | Rod Seal (PolyPak) |
| 42 | Piston Lipseal Back-Up Washer |
| 43 | Back-up Washer, rod seal |
| 44 | Piston Lipseal |
| 45 | Gland O-Ring |
| 46A | Cushion Sealing Ring |

| Symbol | Description |
|---|---|
| 47 | O-Ring, cylinder tube to head and cap seal |
| 48 | Piston Ring |
| 55 | Set Screw, piston lock |
| 70, 69 | Cushion Adjusting Needle Screw, O-Ring |
| 72, 71, 69 | Check Valve Screw, Ball, O-Ring |
| 117 | Rod Bearing (Gland) |
| 118 | Piston |
| 119 | Piston Seal |
| 120 | Piston Seal Energizer |
| 121 | Wear Ring |
| 122 | Retainer Bolt |
| 123 | Washer, tie rod nut |
| 136 | Spacer, cushion |
| 137 | Cushion Spear, detachable |
| 138 | Bolt, cushion spear |

View Table of Contents

## 10.00" - 20.00" Bore Series 3H

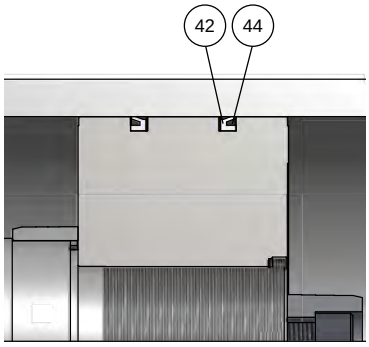


**Optional Piston Lipseals (10.00" – 14.00" Bore Only)**

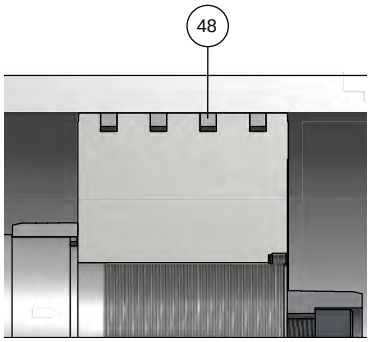


**Optional Cast Iron Piston Rings**

### 3H Large Bore Seal Kits

| Bore Ø | Rod Dia. | Rod Seal Kits: Contains Symbol 40, 41, 43, 45 — Group 1 Kit No. | Rod Seal Kits: Contains Symbol 40, 41, 43, 45 — Group 5 Kit No. | Rod Seal Kits Including Bearing: Contains Symbol 40, 41, 43, 45 & 117 — Group 1 Kit No. | Rod Seal Kits Including Bearing: Contains Symbol 40, 41, 43, 45 & 117 — Group 5 Kit No. |
|---|---|---|---|---|---|
| 10.00 | 4.500 | RK3H000451 | RK3H000455 | RG3H000451 | RG3H000455 |
| | 7.000 | RK3H000701 | RK3H000705 | RG3H000701 | RG3H000705 |
| | 5.000 | RK3H000501 | RK3H000505 | RG3H000501 | RG3H000505 |
| | 5.500 | RK3H000551 | RK3H000555 | RG3H000551 | RG3H000555 |
| 12.00 | 5.500 | RK3H000551 | RK3H000555 | RG3H000551 | RG3H000555 |
| | 8.000 | RK3H000801 | RK3H000805 | RG3H000801 | RG3H000805 |
| | 7.000 | RK3H000701 | RK3H000705 | RG3H000701 | RG3H000705 |
| 14.00 | 7.000 | RK3H000701 | RK3H000705 | RG3H000701 | RG3H000705 |
| | 10.000[1] | RK3H001001 | RK3H001005 | RG3H001001 | RG3H001005 |
| | 8.000[1] | RK3H000801 | RK3H000805 | RG3H000801 | RG3H000805 |

[1]For 16.00", 18.00" and 20.00" Bore 3H Cylinders with 8.000" and 10.000" rods use the seal kits listed above for 14.00" Bore 3H with 8.000" and 10.000" rods.

| Bore Ø | Tie Rod Torque |
|---|---|
| 10.00 | 700 - 716 lb-ft |
| 12.00 | 1320 - 1336 lb-ft |
| 14.00 | 1000 - 1016 lb-ft |
| 16/18/20 | 2900 - 3000 lb-ft |

### Retainer Bolt Torque for Cylinders with Round Gland Retainers

Torque values are for bolts installed with lubrication.

| Bolt Size | Torque |
|---|---|
| 1/2 | 100 - 105 lb-ft |
| 5/8 | 185 - 194 lb-ft |
| 3/4 | 330 - 346 lb-ft |

### 3H Piston Ring & Piston Lipseal Kits

| Bore Ø | Piston Ring Kit: Contains 2 ea. Symbol # 26 & 47, & 4 ea. Symbol # 48 — Service Class 1 | Piston Ring Kit — Service Class 5 | Piston Lip Seal Kit: Contains Symbol # 40, 41, 43, 45 & 117 — Service Class 1 | Piston Lip Seal Kit — Service Class 5 |
|---|---|---|---|---|
| 10.00 | PR9023H001 | PR9023H005 | PK9023H001 | PK9023H005 |
| 12.00 | PR9223H001 | PR9223H005 | PK9223H001 | PK9223H005 |
| 14.00 | PR9423H001 | PR9423H005 | PK9423H001 | PK9423H005 |

### 3H Hi Load Piston Seal Kits

| Bore Ø | Hi Load Piston Seal Kit — Service Class 1 | Hi Load Piston Seal Kit — Service Class 5 | Cylinder Body End Seal Kit: Contains 2 ea. Symbol # 26 & 47 — Service Class 1 | Cylinder Body End Seal Kit — Service Class 5 |
|---|---|---|---|---|
| 10.00 | PK903HK001 | PK903HK005 | CB9023H001 | CB9023H005 |
| 12.00 | PK923HK001 | PK923HK005 | CB9223H001 | CB9223H005 |
| 14.00 | PK943HK001 | PK943HK005 | CB9423H001 | CB9423H005 |
| 16.00 | PK963HK001 | PK963HK005 | CB9623H001 | CB9623H005 |
| 18.00 | PK983HK001 | PK983HK005 | CB9823H001 | CB9823H005 |
| 20.00 | PK9A3HK001 | PK9A3HK005 | CB9A23H001 | CB9A23H005 |

View Table of Contents

## Gland Cartridge Wrenches

Parker's exclusive gland cartridge design makes gland replacement only a minute's work...and the Gland Cartridge Wrench Set makes it even simpler. A specially designed face-type gland wrench with flared lugs slips into an exact, sure fit on the gland, while a self-locking spanner wrench grips the gland wrench securely. No fumbling for adjustment – no accidental scoring of the piston rod, the job is done quickly...easily...safely.

You can order the Cartridge Wrench or Spanner Wrench to fit the piston rod size used in your Parker Hannifin Cylinder.

| Rod Ø | Gland Wrench (Symbol 63) | Spanner Wrench (Symbol 63-A) |
|---|---|---|
| 0.625 | 0695900000 | 0116760000 |
| 1.000 | 0695910000 | |
| 1.375 | 0695920000 | 0117030000 |
| 1.750 | 0695930000 | 0116770000 |
| 2.000 | 0695940000 | |
| 2.500 | 0695950000 | 0116770000 |
| 3.000 | 0695960000 | |
| 3.500 | 0695970000 | |
| 4.000 | 0695980000 | 0116780000 |
| 4.500 | 0838770000 | |
| 5.000 | 0695990000 | |
| 5.500 | 0696000000 | |

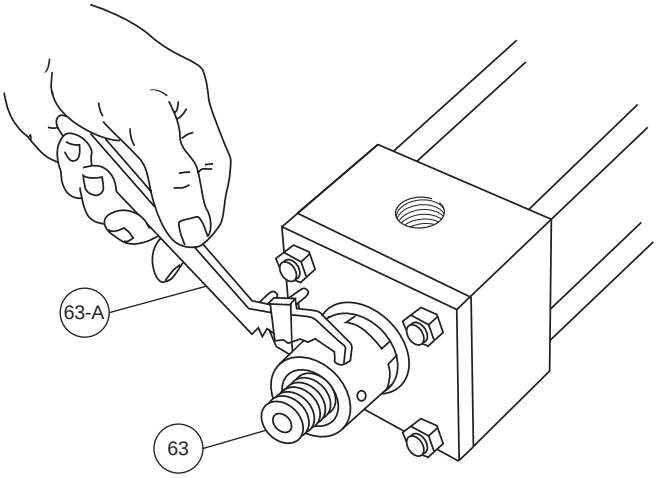


## Cylinder Body End Seal Kits

### Series 2H, 2HD, 2HB and Series 3H, 3HD, 3HB 7.00" & 8.00" Bore

| Bore Ø | Seal Type | | | |
|---|---|---|---|---|
| | Class 1 / 4 Service (Poly-urethane) | Class 2 / 6 Service (Nitroxile) | Class 3 Service (EPR) | Class 5 / 8 Service (Fluoro-carbon) |
| | Contains 2 ea. Sym.#47[1] | Contains 2 ea. Sym.#47 & #26 | Contains 2 ea. Sym.#47 & #26 | Contains 2 ea. Sym.#47 & #26 |
| 1.50 | CB152HG201 | CB152HG202 | CB152HG203 | CB152HG205 |
| 2.00 | CB202HG201 | CB202HG202 | CB202HG203 | CB202HG205 |
| 2.50 | CB252HG201 | CB252HG202 | CB252HG203 | CB252HG205 |
| 3.25 | CB322HG201 | CB322HG202 | CB322HG203 | CB322HG205 |
| 4.00 | CB402HG201 | CB402HG202 | CB402HG203 | CB402HG205 |
| 5.00 | CB502HG201 | CB502HG202 | CB502HG203 | CB502HG205 |
| 6.00 | CB602HG201 | CB602HG202 | CB602HG203 | CB602HG205 |
| 7.00 | CB703HG201 | CB703H0002 | CB703H0003 | CB703HG205 |
| 8.00 | CB803HG201 | CB803H0002 | CB803H0003 | CB803HG205 |

[1] 2 ea. of Sym. #26 also included for 7.00" & 8.00" bore

### Series 3H Large Bore

| Bore Ø | Seal Type | | | |
|---|---|---|---|---|
| | Class 1 / 4 Service (Poly-urethane) | Class 2 / 6 Service (Nitroxile) | Class 3 Service (EPR) | Class 5 Service (Fluoro-carbon) |
| | Contains 2 ea. Sym.#47 & #26 | Contains 2 ea. Sym.#47 & #26 | Contains 2 ea. Sym.#47 & #26 | Contains 2 ea. Sym.#47 & #26 |
| 10.00 | CB903H0001 | CB9023H002 | CB9023H003 | CB9023H005 |
| 12.00 | CB923H0001 | CB9223H002 | CB9223H003 | CB9223H005 |
| 14.00 | CB943H0001 | CB9423H002 | CB9423H003 | CB9423H005 |
| 16.00 | CB963H0001 | CB9623H002 | CB9623H003 | CB9623H005 |
| 18.00 | CB983H0001 | CB9823H002 | CB9823H003 | CB9823H005 |
| 20.00 | CB9A3H0001 | CB9A23H002 | CB9A23H003 | CB9A23H005 |

View Table of Contents

# Section G

## Custom Modifications


| | |
|---|---|
| Magnetic Piston | 150 |
| Magnetic Switch Choices: Tie Rod Mounted ALS and Global Switches | 151 |
| Head and Cap Mounted End-of-Stroke Proximity Switches | 152-155 |
| Water Submersible Option and How to Order | 156-157 |
| Buffer Seal Gland, Rod End Styles and Seal Kits | 158-159 |
| Metallic Rod Scraper, Crown Wiper, Rod End Boots, Gland Drain and Air Bleeds | 160 |
| Tie Rod Supports, Stroke Adjusters, Thrust Key Mountings and Metric Piston Rod Thread | 161 |
| Global Shield™ Rod Coating Technology | 162 |

View Table of Contents

# Series 2H Magnetic Piston

## Position Sensing Technology for Hydraulic Cylinders – 1.50" thru 6.00" Bore

### Customer Value Proposition

Parker's magnetic sensing option for heavy duty hydraulic cylinders provides OEM's and end users the ability to sense piston position economically and reliably through the use of innovative magnet and switching technology. The magnetic piston option offers all users the ability to eliminate added cylinder machining costs, stand alone external brackets / hardware and reduced system set-up time. By incorporating sensing capability into hydraulic cylinders, the need to install, wire and adjust stand alone proximity switches can be eliminated – thus providing a clean and more efficient position monitoring system.

**Series 2H Cylinder with magnetic piston**

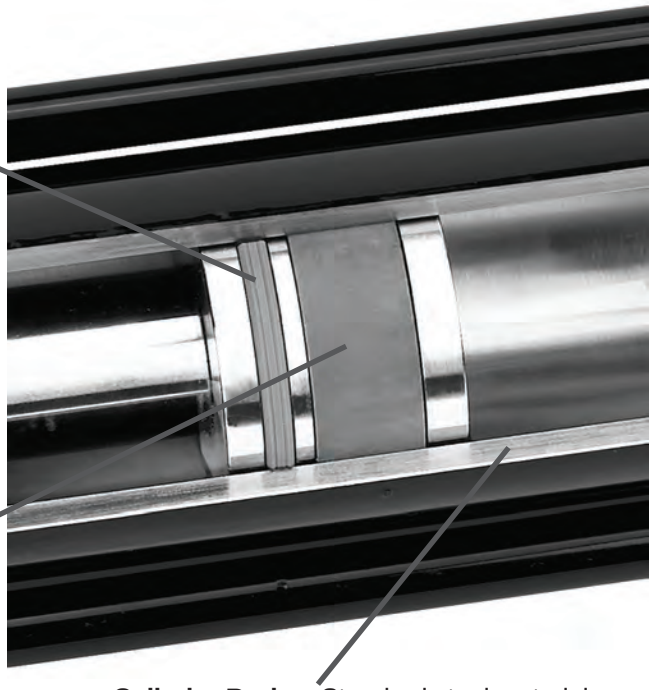


### Sensing Technologies

- Parker's ALS switch works with a magnetic piston in a standard steel tube by detecting the change in polarity of the steel material as the magnet passes under the switch. Standard steel tube is more economical in longer strokes than non-ferrous stainless steel tubes required for conventional sensors. Solid State ALS switches are available in both PNP and NPN outputs and can be wired either normally open or normally closed. Magnetic piston with steel tube for ALS switches is available 1.50" – 6.00" bore and is specified with a '7' in the Piston Magnet field of the cylinder model number.
- Parker Global Switches are available in both Reed and Solid State types. Solid State switches are available in both PNP and NPN outputs. They work with a magnetic piston in a 316 stainless steel tube. Magnetic piston with a stainless steel tube for Global Switches is available 1.50" – 4.00" bore and is specified with a '3' in the Piston Magnet field of the cylinder model number.

View Table of Contents

# Magnetic Switch Choices

Parker's ALS switch and Global switch are designed to offer customers an alternative means of sensing hydraulic cylinder piston position. Depending on the application, and the budget, one switch type may be better suited to fulfill customer needs than the other.

Some of the important things to consider when deciding which technology to choose are shown below. For more details on ALS and Global switches as well as other position sensing options see catalog HY08-1132.

## ALS Switch

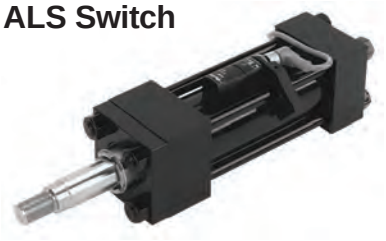

- Compatible with standard steel tube
- +10 to +30 VDC power requirement
- PNP/NPN wired NO or NC
- Solid state construction
- 2 LED indicators (power & target)
- 12mm connector
- IP 67 rated
- Temperature Range: -25°C to +85°C
- Short circuit protection

## ALS Switch Kit Part Numbers

Switches are packaged with a mounting bracket.

| Part Number | | Switch Bracket Usage |
|---|---|---|
| PNP | NPN | |
| ALS-PH | ALS-NH | Series 2H 1.50 – 4.00 Bore |
| ALS-PHA | ALS-NHA | Series 2H 5.00 & 6.00 Bore |

## Minimum Stroke for ALS Switch

| Bore Ø | Minimum Stroke |
|---|---|
| 1.50 | 3.00 |
| 2.00 | 3.00 |
| 2.50 | 2.88 |
| 3.25 | 2.75 |

| Bore Ø | Minimum Stroke |
|---|---|
| 4.00 | 2.63 |
| 5.00 | 2.38 |
| 6.00 | 2.19 |

ALS Switches allow a .38 - .50 inch stroke-to-go piston travel for end-of-stroke mounting locations.

## Global Switch

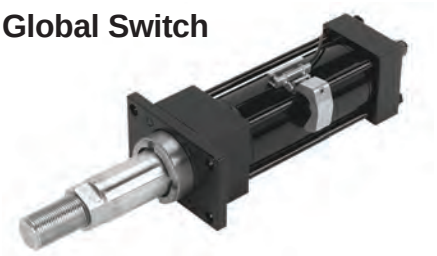

- Uses 316 stainless steel tube
- +10 to +30 VDC power requirement
- PNP/NPN, Reed
- Solid state construction
- 1 power LED indicator
- 8mm connector or flying leads
- IP67 rated
- Temperature Range: -25°C to + 75°C
- Short circuit protection

## Global Drop-In Switches

| Wiring | Reed | PNP | NPN |
|---|---|---|---|
| 3m Flying Leads | P8S-GRFAX | P8S-GPFAX | P8S-GNFAX |
| 10m Flying Leads | P8S-GRFDX | P8S-GPFDX | P8S-GNFDX |
| 0.3m Lead with 8mm connector | P8S-GRCHX | P8S-GPCHX | P8S-GNCHX |

| Wiring | PNP Switch ATEX Certified | PNP Switch High Temperature |
|---|---|---|
| 3m Flying Leads | P8S-GRFLX/EX | P8S-GPFLH |

Global switch tie rod mounting bracket, part number P8S-TMA0X, must be ordered separately.

View Table of Contents

### EPS 7 & 6 Sensors Inductive Proximity

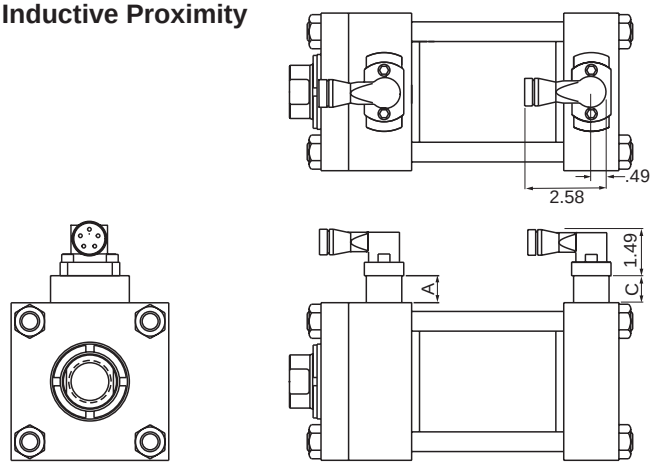


### CLS 1 & 4 Sensors Non-Contacting Magnetically Actuated

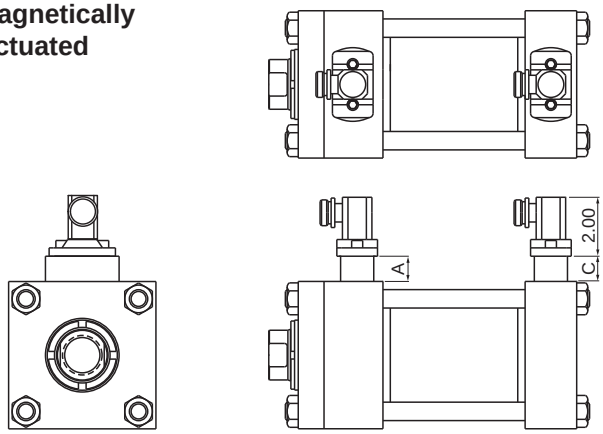


### Spacer Height EPS & CLS Sensors

| A max. | C max. |
|---|---|
| .86 | 1.75 |

For exact dimensions, see Bulletin 0840-G-E1.

### Connector Pin Numbering

**3-Pin Mini**

**EPS-7**

**5-Pin Mini**

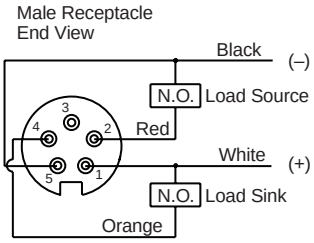


**EPS-6**

## Series and Parallel Wiring

When Parker EPS-6 or 7 sensors are used as inputs to programmable controllers the preferred practice is to connect each sensor to a separate input channel of the PLC. Series or parallel operations may then be accomplished by the internal PLC programming.

Parker EPS-6 or 7 sensors may be hard wired for series operation, but the voltage drop through the sensors (see specifications) must not reduce the available voltage below what is needed to actuate the load.

Parker EPS-6 or 7 sensors may also be hard wired for parallel operation. However, the leakage current of each sensor will pass through the load. The total of all leakage currents must not exceed the current required to actuate the load. In most cases, the use of two or more EPS-6 or 7 sensors in parallel will require the use of a bypass (shunt) resistor.

## Minimum Stroke

The minimum stroke for EPS-6 or 7 and CLS-1 or 4 sensors, utilizing standard components, is the cushion sleeve or spear length for the cylinder series in which the sensor is installed. See the Cushion Length Chart in this catalog for details. Contact the factory if a shorter stroke is required.

View Table of Contents

## CLS-2 Threaded Style Switches

Spacers are not required. Threaded switches can be adjusted for small changes to end of stroke position sensing.

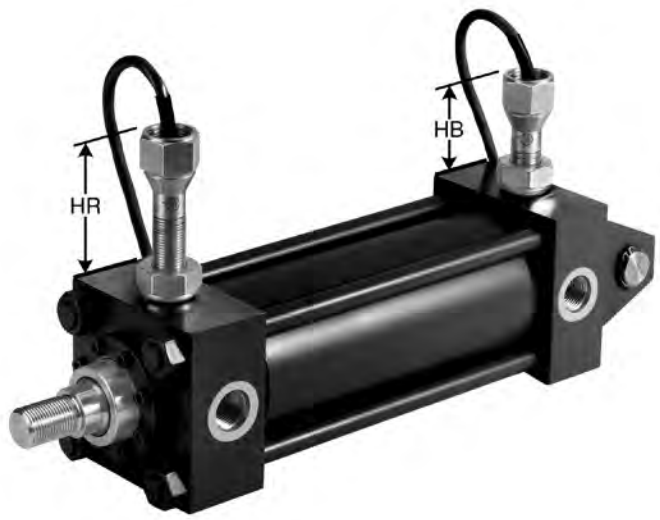


### Switch Height

| Bore Ø | Rod Ø | HR | HB |
|---|---|---|---|
| 1.50 | 0.625 | 2.56 | 3.31 |
| | 1.000 | 2.75 | |
| 2.00 | 1.000 | 2.56 | 3.25 |
| | 1.375 | 2.69 | |
| 2.50 | 1.000 | 2.31 | 2.94 |
| | 1.375 | 2.50 | |
| | 1.750 | 2.69 | |
| 3.25 | 1.375 | 2.94 | 2.56 |
| | 1.750 | 3.13 | |
| | 2.000 | 3.31 | |
| 4.00 | 1.750 | 2.88 | 2.44 |
| | 2.000 | 3.06 | |
| | 2.500 | 2.50 | |
| 5.00 | 2.000 | 2.31 | 2.31 |
| | 2.500 | 2.63 | |
| | 3.000 | 2.88 | |
| | 3.500 | 3.13 | |
| 6.00 | 2.500 | 2.13 | 3.00 |
| | 3.000 | 2.38 | |
| | 3.500 | 2.63 | |
| | 4.000 | 2.88 | |
| 7.00 | 3.000 | 3.38 | 2.69 |
| | 3.500 | 2.13 | |
| | 4.000 | 2.38 | |
| | 4.500 | 2.63 | |
| | 5.000 | 3.00 | |
| 8.00 | 3.500 | 3.13 | 2.25 |
| | 4.000 | 3.38 | |
| | 4.500 | 2.13 | |
| | 5.000 | 2.50 | |
| | 5.500 | 2.69 | |

As shown in the illustrations below, these switches are magnetically operated. Dual magnets provide a dependable “snap action” for positive position sensing.

In the “Unoperated” position, the magnet assembly is attracted in the opposite direction of the arrow, causing a finely ground stainless steel connecting rod to hold the contacts open.

In the “Operated” position a ferrous part (cushion or piston) enters the sensing area and attracts the magnet assembly which causes the rod to draw the contacts together.

### Operating Principle

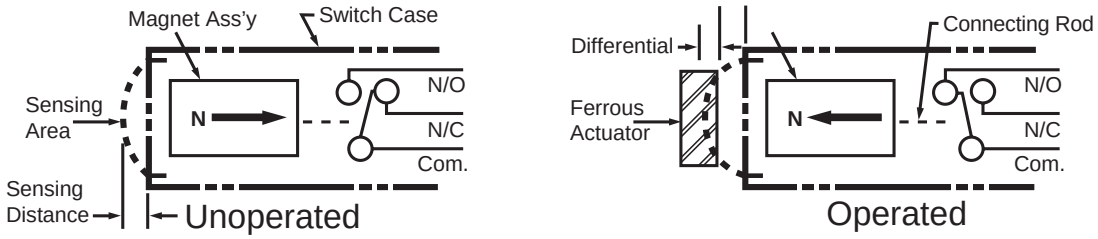


**Sensing gap:** .030" to .060"

**Trip point:** Factory set with piston bottomed out.

**Release point:** Approx. 0.25" piston travel.

Minimum cylinder stroke is .50" on 1.50" & 2.00" bores; and .75" on 2.50" bore and larger.

See the CLS Specification table for additional details.

View Table of Contents

## Specifications

| Style: | EPS-7 | EPS-6 | CLS-1 | CLS-4 | CLS-2 |
|---|---|---|---|---|---|
| **Code Designator:** | H | D | F | B | G |
| **Description:** | Economical, General Purpose, 2 wire device, primarily for AC applications. (Not suitable for 3 wire 24 volt Sinking or Sourcing applications.) Also for automotive industry applications. | Economical, General Purpose, 3 wire, DC sensor, dual output: sinking and sourcing | Functional replacement for AB (Mechanical) Limit Switches in many applications, or where customer needs NC contacts, zero leakage, zero voltage drop, higher or lower load current than EPS-style | Functional replacement for AB (Mechanical) Limit Switches in many High Temperature applications, or where customer needs NC contacts, zero leakage, zero voltage drop, higher or lower load current than EPS-style. | For applications where the customer needs NC contacts, zero leakage, zero voltage drop, higher or lower load current than EPS style. Threaded style permits small adjustability of make/break location. |
| **Supply Voltage:** | 20 to 250 VAC/DC | 10 to 30 VDC | 24 to 240 VAC/DC | 24 to 240 VAC/DC | 24 to 240 VAC/DC |
| **Load Current, min:** | 8 mA | N/A | NA | NA | NA |
| **Load Current, max:** | 300 mA | 200 mA | 4 AMPS @ 120 VAC<br>3 AMPS @ 24 VDC | 4 AMPS @ 120 VAC<br>3 AMPS @ 24 VDC | 4 AMPS @ 120 VAC<br>3 AMPS @ 24 VDC |
| **Leakage Current:** | 1.7 mA, max. | 10 micro amps max | – | – | – |
| **Voltage Drop:** | 7 V, max. | 2 VDC max. | N/A | NA | None |
| **Operating Temperature:** | -14° to +158° F | -14° to +158°F | -40°F to +221°F | -40°F to +400°F | -40°F to +221°F |
| **Sensor Type:** | Inductive proximity | Inductive proximity | non-contacting magnetically actuated | non-contacting magnetically actuated | non-contacting magnetically actuated |
| **Part Number:** | 148897[1] | 148896[1] | 148275[1] | 149109[1] | 117000, 117017, 117034 |
| **Part Number Suffix[1]:** | **[1]4-digit suffix indicates probe length: 0125=1.25", 0206=2.06", 0287=2.875", 0456=4.562"** | | | | Switch selection is application dependent – Contact Factory |
| **Connection:** | 3 pin mini | 5 pin mini | 3 pin mini | 144" PTFE Coated Flying Leads with 1/2" conduit hub | 36" Potted-in PVC cable (most sizes also with 1/2" conduit hub) |
| **Enclosure Rating:** | IEC IP67 | IEC IP67 | NEMA 1, 2, 3, 4, 4x, 5, 6, 6P, 11, 12, 12K, 13 | NEMA 1, 2, 3, 4, 4x, 5 | NEMA 4, 4X, 6, 6P, 7, 9 |
| **LED indication:** | Yes | Yes | Yes | No | No |
| **Short Circuit Protection:** | Yes | Yes | No | No | No |
| **Weld Field Immunity:** | Yes | Yes | Yes | Yes | Yes |
| **Output:** | 2 wire, Normally Open with leakage current | Dual Output: DC Sinking and DC Sourcing, user selectable via wiring | SPDT (Single Pole Double Throw), Normally Open/ Normally Closed, Form C | SPDT (Single Pole Double Throw), Normally Open/ Normally Closed, Form C | SPDT (Single Pole Double Throw), Normally Open/ Normally Closed, Form C |
| **Approvals/Marks:** | CE, UL, CSA | CE, UL, CSA | UL or CSA[2] | UL or CSA[2] | UL or CSA[2] |
| **Make/Break Location:** | **0.13" from end of stroke, typical. Tolerance is +0/-0.13"** | | | | – |
| **Wiring Instructions:** | Pin 1: AC Ground (Green)<br>Pin 2: Output (Black)<br>Pin 3: AC Line (White) | Pin 1: +10 to 30 VDC (White)<br>Pin 2: Sourcing Output (Red)<br>Pin 3: Grounded (not connected or required)<br>Pin 4: Sinking Output (Orange)<br>Pin 5: DC Common (Black) | Pin 1: Common (Green)<br>Pin 2: Normally Closed (Black)<br>Pin 3: Normally Open (White) | Common (Black)<br>Normally Open (Blue)<br>Normally Closed (Red) | Common (Black)<br>Normally Open (Blue)<br>Normally Closed (Red) |
| **Cable: 6'** | 0853550006 | 0859170006 | 0853550006 | – | – |
| **Cable: 12'** | 0853550012 | 0859170012 | 0853550012 | – | – |
| **Cable: 6', Right Angle** | 0875470006 | – | 0875470006 | – | – |

[2]CSA available upon request – contact factory.

View Table of Contents

## How to Specify EPS Proximity Switches

Parker EPS proximity switches may be ordered on Series 2H, 2HD, 2HB & 3H, 3HD, 3HB cylinders as follows:

1) Complete the basic cylinder model number.

2) Place an “S” in the model number to denote switches and/or special features.

3) Mounting styles D, DB, JJ, J, or H should be used with caution because of possible mounting interferences. See Available Switch Position table below for additional details.

4) Special modifications to cylinders other than switches must have a written description.

5) Specify letter prefix “H” for EPS-7, “D” for EPS-6, and “F” for CLS-1, “B” for CLS-4 or “G” for CLS-2, then fill in the four blanks specifying port location, switch orientation and actuation point for both head and cap. If only one switch is used, place “XXXX” in the unused blanks.

Example = H13AGG-XXXX denotes a switch on the head end only, EPS-7

Example = XXXX-H42AGG denotes a switch on the cap end only, CLS-4

### Head End

| H | 1 | 3 | A | GG |
|---|---|---|---|---|
| Specify:<br>“H” = EPS-7<br>“D” = EPS-6<br>“F” = CLS-1[1]<br>“B” = CLS-4[1]<br>“G” = CLS-2<br>“N” = Prep for EPS-6 and EPS-7 switches<br>“P” = Prep for CLS-1 and CLS-4 switches<br>“T” = Prep for CLS-2 switch | Port Location See Figure 1. | Switch Location See Figure 1. | Switch Orientation See Figure 2 for EPS-7, EPS-6, CLS-1 and CLS-4. | Actuation Point<br>GG = End of Stroke<br>FF = Stroke to Go;<br>See Bulletins 0840-G-E1, 2 or 3 for stroke remaining. |

### Cap End

| H | 4 | 2 | A | GG |
|---|---|---|---|---|
| Specify:<br>“H” = EPS-7<br>“D” = EPS-6<br>“F” = CLS-1[1]<br>“B” = CLS-4[1]<br>“G” = CLS-2<br>“N” = Prep for EPS-6 and EPS-7 switches<br>“P” = Prep for CLS-1 and CLS-4 switches<br>“T” = Prep for CLS-2 switch | Port Location See Figure 1. | Switch Location See Figure 1. | Switch Orientation See Figure 2 for EPS-7, EPS-6, CLS-1 and CLS-4. | Actuation Point<br>GG = End of Stroke<br>FF = Stroke to Go;<br>See Bulletins 0840-G-E1, 2 or 3 for stroke remaining. |

Note: All specified switch and port locations are as seen from rod end of cylinder.
[1] CLS-1 and CLS-4 proximity switches are not available on the head end of 1.50" bore with 1.00" rod and 2.00" bore with 1.375" rod

### Available Mounting Positions[1] for EPS-6, EPS-7, CLS-1, CLS-4

| MOUNTING STYLES | | Bore Ø | | | | | | | | |
|---|---|---|---|---|---|---|---|---|---|---|
| | | 1.50 | 2.00 | 2.50 | 3.25 | 4.00 | 5.00 | 6.00 | 7.00 | 8.00 |
| T,TB,TC, TD,BB,DD, DE,SB,SE | HEAD | 1,2,3,4 | 1,2,3,4 | 1,2,3,4 | 1,2,3,4 | 1,2,3,4 | 1,2,3,4 | 1,2,3,4 | 1,2,3,4 | 1,2,3,4 |
| | CAP | 1,2,3,4 | 1,2,3,4 | 1,2,3,4 | 1,2,3,4 | 1,2,3,4 | 1,2,3,4 | 1,2,3,4 | 1,2,3,4 | 1,2,3,4 |
| J,D,JJ[2] | HEAD | 1,3 | 1,3 | 1,3 | 1,3 | 1,3 | 1,3 | 1,3 | 1,3 | 1,3 |
| | CAP | 1,2,3,4 | 1,2,3,4 | 1,2,3,4 | 1,2,3,4 | 1,2,3,4 | 1,2,3,4 | 1,2,3,4 | 1,2,3,4 | 1,2,3,4 |
| H,DB,HH | HEAD | 1,2,3,4 | 1,2,3,4 | 1,2,3,4 | 1,2,3,4 | 1,2,3,4 | 1,2,3,4 | 1,2,3,4 | 1,2,3,4 | 1,2,3,4 |
| | CAP | 1,3 | 1,3 | 1,3 | 1,3 | 1,3 | 1,3 | 1,3 | 1,3 | 1,3 |
| C[3] | HEAD | 1 | 1 | 1 | 1 | 1 | 1,2,4 | 1,2,4 | 1,2,4 | 1,2,4 |
| | CAP | 1 | 1 | 1 | 1 | 1 | 1,2,4 | 1,2,4 | 1,2,4 | 1,2,4 |
| F | HEAD | 1 | 1 | 1,2,4 | 1,2,4 | 1,2,4 | 1,2,4 | 1,2,4 | 1,2,4 | 1,2,4 |
| | CAP | 1 | 1 | 1,2,4 | 1,2,4 | 1,2,4 | 1,2,4 | 1,2,4 | 1,2,4 | 1,2,4 |
| JB | HEAD | NA | NA | NA | 1,2,3,4 | 1,2,3,4 | 1,2,3,4 | 1,2,3,4 | 1,2,3,4 | 1,2,3,4 |
| | CAP | 1,2,3,4 | 1,2,3,4 | 1,2,3,4 | 1,2,3,4 | 1,2,3,4 | 1,2,3,4 | 1,2,3,4 | 1,2,3,4 | 1,2,3,4 |
| HB | HEAD | 1,2,3,4 | 1,2,3,4 | 1,2,3,4 | 1,2,3,4 | 1,2,3,4 | 1,2,3,4 | 1,2,3,4 | 1,2,3,4 | 1,2,3,4 |
| | CAP | NA | NA | NA | 1,2,3,4 | 1,2,3,4 | 1,2,3,4 | 1,2,3,4 | 1,2,3,4 | 1,2,3,4 |

[1] Positions 1, 2, 3 and 4 are determined by viewing cylinder from piston rod end (See Figure 1). The electrical connector orientation may be restricted in some cases.
[2] On 1.50" - 5.00" bore Style JJ cylinders, switches will extend beyond mounting surface of cylinder.
[3] On 6.00" bore cylinders and larger switches mounted in position 2 or 4 will interfere with the installation and removal of mounting bolts.

**Figure 1**

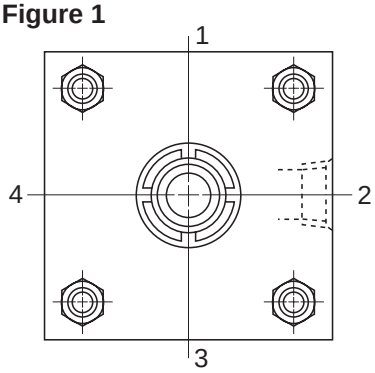


**Figure 2**

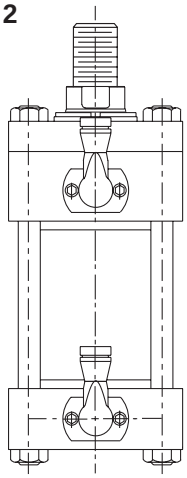

View Table of Contents

# Water Submersible Option for Series 2H, 2HD, 2HB and 3H, 3HD, 3HB Hydraulic Cylinders

**Optional Polypak Inner and Outer Rod Seals** resist internal and external pressure. Required for depths over 25 ft and up to 5000 ft.

**Optional Dual Cylinder Body Seals** resist external pressure. Required for depths over 25 ft and up to 5000 ft.

**Optional 17-4 stainless steel tie rods and Bumax 88 stainless steel nuts** resist corrosion.

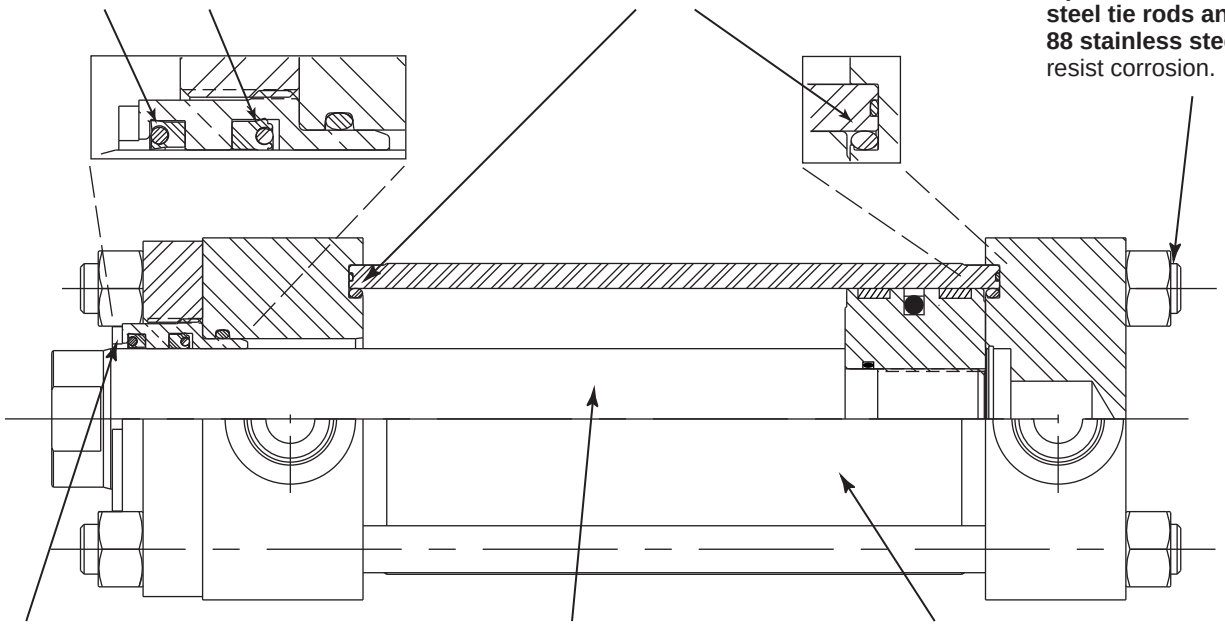

**Bronze Rod Bushing**

**Standard 17-4 Heat-Treated, Chrome-Plated, High Tensile Stainless Steel Piston Rod Material** resists corrosion.

**Several surface treatment options are available** for protection against operating environments.

**Specifications:**

- Submersion Depth: up to 5000 ft
- Heavy Duty Service – ANSI (NFPA) T3.6.7R2 – 1996 Specifications and Mounting Dimension Standards
- Nominal Pressure – 3000 psi
- Operating Temperature – -10°F to +165°F
- 17-4 PH chrome plated stainless steel piston rod
- Stainless steel name tag affixed with stainless steel wire around tie rod

**Cylinder Seal Construction:**

- Up to 25 ft – Standard rod seal and body seals
- Over 25 ft to 5000 ft
  - Subsea rod seal package that includes a Polypak oil seal and an outward facing Polypak wiper to seal against water intrusion.
  - Subsea body seal package with ID oil seal and body-end o-ring to seal against water intrusion.
  - Not available with 0.625 Ø piston rod

**Standard Options for Water Submersible Cylinders:**

Material

- 17-4 PH stainless steel tie rods and Bumax 88 stainless steel tie rod nuts
- Chrome plated body ID

Surface Treatments for Corrosion Protection

- Electroless nickel plated exterior (head, cap, body and retainer)
- Inorganic zinc primer (zinc primer only – without bond coating)
- Inorganic zinc primer with epoxy undercoat and anacrylic topcoat
- Epoxy undercoat and topcoat

**Custom Options available for Special Order:**

- End-of-Stroke Switches
- All stainless steel construction

View Table of Contents

# Water Submersible Option for Series 2H, 2HD, 2HB and 3H, 3HD, 3HB Hydraulic Cylinders

**How to order:**

1. Specify the complete Parker Cylinder Model Number.
2. Put an “S” in the model number to indicate a special cylinder.
3. Include the 3 digit Submersible Code.
4. For custom options, such as switches, provide a complete description or drawing of your requirements.

**Submersible Code**

When selecting the submersible option, an S must be placed in the Model Number. Select Submersible Code values for the required Submersion Depth, Cylinder Body, and Corrosion Protection. See the example Model Number below:

| Feature | Code | Specification | For |
|---|---|---|---|
| Submersion Depth | 1 | Conventional rod gland and body seal design | Depths to 25 ft |
| | 2 | Submersible rod gland and dual cylinder body seals | Depths to 5000 ft |
| | 3 | Other | Specify depth / requirements |
| Cylinder Body | P | Plain ID | |
| | C | Chrome plated ID | |
| Corrosion Protection | 1 | Inorganic zinc primer | Splash & short term immersion service where equipment is top coated by the customer |
| | 2 | Inorganic zinc primer with stainless steel tie rods, nuts, & fasteners | |
| | 3 | Electroless nickel plated exterior with stainless steel tie rods, nuts, & fasteners | |
| | 4 | Inorganic zinc primer, epoxy undercoat, & anacrylic topcoat. | Splash & short term immersion service |
| | 5 | Inorganic zinc primer, epoxy undercoat, & anacrylic topcoat with stainless steel tie rods, nuts, & fasteners | |
| | 6 | Epoxy base & top coat. | Long term immersion service |
| | 7 | Epoxy base & top coat. with stainless steel tie rods, nuts, & fasteners | |
| | 9 | Other | Specify requirements |

**Example:**

**4.00 BB 2HK T S 14 X 24.00**

**S=Submersible Code: 2P1**

(describes a 4" x 24" cylinder for submersion up to 5000 ft, with a plain cylinder body ID and Inorganic Zinc Primer corrosion protection.)

## Water Submersible Codes and Features Supplied

**Depths to 5000 ft**[1]

| Submersible Cylinder Feature | Water Submersible Code[1] | | | | | | | | | | | | | |
|---|---|---|---|---|---|---|---|---|---|---|---|---|---|---|
| | 2P1 | 2P2 | 2P3 | 2P4 | 2P5 | 2P6 | 2P7 | 2C1 | 2C2 | 2C3 | 2C4 | 2C5 | 2C6 | 2C7 |
| 17-4 PH piston rod | X | X | X | X | X | X | X | X | X | X | X | X | X | X |
| Stainless steel tag | X | X | X | X | X | X | X | X | X | X | X | X | X | X |
| Submersible rod gland | X | X | X | X | X | X | X | X | X | X | X | X | X | X |
| Dual cylinder body seals | X | X | X | X | X | X | X | X | X | X | X | X | X | X |
| Chrome plated cylinder ID | | | | | | | | X | X | X | X | X | X | X |
| SS tie rods, nuts, & fasteners | | X | X | | X | | X | | X | X | | X | | X |
| Electroless nickel plated exterior | | | X | | | | | | | X | | | | |
| Inorganic zinc primer | X | X | | | | | | X | X | | | | | |
| Inorganic zinc primer with topcoats | | | | X | X | | | | | | X | X | | |
| Epoxy base & topcoat | | | | | | X | X | | | | | | X | X |

[1] Corresponding submersible codes for depths to 25 ft begin with 1 (e.g. 1P1, 1P2, etc.) and include all of the features marked for 5000 ft depth ***except*** Submersible Rod Gland and Dual Cylinder Body Seals.

View Table of Contents

## Parker Buffer Seal's Unique Design

The Parker Buffer Seal Gland is recommended for heavy duty applications where pressure spikes on the rod side of the piston produce premature rod seal failure. Whether the pressure spikes are caused by an external

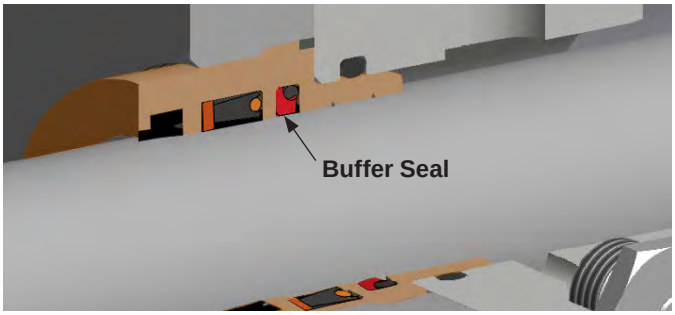


force or intensification due to differential piston areas, the resultant rod seal damage drives the need for more frequent unplanned service downtime.

Parker Buffer Seal is a secondary, upstream seal that protects the primary rod seal from damage caused by pressure spikes. The polyurethane Buffer Seal for Class 1 service and filled PTFE Buffer Seal for all other Seal Classes is o-ring energized, low friction and extrusion resistant.

The Parker Buffer Seal is a unique design that allows trapped pressure back into the cylinder. When the rod extends from the cylinder the Buffer Seal is riding on a high compression sealing point to limit leakage. On the retract stroke the seal rocks forward to allow trapped fluid to pass under the seal and return to the system.

Buffer Seals are available with Series 2H/3H and 2HB/3HB in 1.50"-8.00" bores. They are available and with Seal Classes 1, 2, 3, 4, 5 & 6. Selection of the Buffer Seal is made with a code in the cylinder model number.

## Rod Extension Dimensions for Buffer Seal Glands

Buffer Seal glands are from 0.31" to 0.81" longer (see table at right) than glands without a Buffer Seal. The longer gland causes the piston rod to extend beyond its location for a standard bushing. A differentiating rod end style 4B vs. 4, 9B vs. 9 etc. must also be specified when selecting the Buffer Seal gland option. Rod end extension dimensions – V, VF, W, WF and WG – for Buffer Seal rod end styles are in the table at right. All other rod end dimensions are unchanged and can be found on the Piston Rod Ends page for each series.

### Series 2HD/2HB & 3HD/3HB 7.00" & 8.00" Bore Rod End Styles

**Style 4B – Small Male**

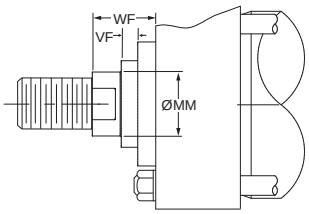


**Style 8B – Intermediate Male**

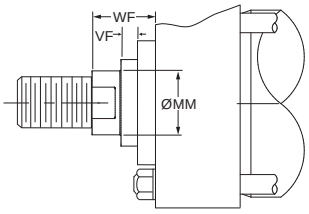


**Style 9B – Short Female**

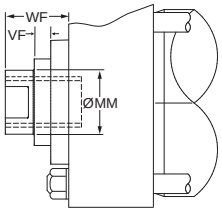


**Style 55B – Flanged Rod End**

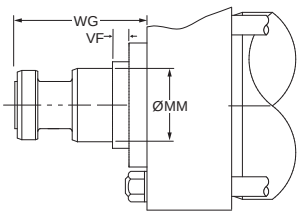


### Rod End Dimensions

| Bore Ø | Rod No. | MM Rod Ø | Gland Length Increase | V | VF | W | WF | WG |
|---|---|---|---|---|---|---|---|---|
| 1.50 | 1 (Std.) | 0.625 | Buffer Seal Not Available in 0.625" Rod | | | | | |
| | 2 | 1.000 | 0.31 | 0.81 | 0.83 | 1.31 | 1.69 | 2.69 |
| 2.00 | 1 (Std.) | 1.000 | 0.31 | 0.56 | 0.83 | 1.06 | 1.69 | 2.69 |
| | 2 | 1.375 | 0.38 | 0.75 | 1.02 | 1.38 | 2.00 | 3.13 |
| 2.50 | 1 (Std.) | 1.000 | 0.31 | 0.56 | 0.83 | 1.06 | 1.69 | 2.69 |
| | 2 | 1.750 | 0.44 | 0.94 | 0.97 | 1.69 | 2.31 | 3.56 |
| | 3 | 1.375 | 0.38 | 0.75 | 1.02 | 1.38 | 2.00 | 3.13 |
| 3.25 | 1 (Std.) | 1.375 | 0.38 | 063 | 1.02 | 1.25 | 2.00 | 3.13 |
| | 2 | 2.000 | 0.44 | 0.81 | 0.97 | 1.69 | 2.44 | 4.19 |
| | 3 | 1.750 | 0.44 | 0.81 | 0.97 | 1.56 | 2.31 | 3.56 |
| 4.00 | 1 (Std.) | 1.750 | 0.44 | 0.69 | 0.97 | 1.44 | 2.31 | 3.56 |
| | 2 | 2.500 | 0.44 | 0.81 | 1.09 | 1.81 | 2.69 | 4.94 |
| | 3 | 2.000 | 0.44 | 0.81 | 0.97 | 1.69 | 2.44 | 4.19 |
| 5.00 | 1 (Std.) | 2.000 | 0.44 | 0.81 | 0.97 | 1.69 | 2.44 | 4.19 |
| | 2 | 3.500 | 0.44 | 0.81 | 0.78 | 1.81 | 2.69 | 6.06 |
| | 3 | 2.500 | 0.44 | 0.81 | 1.09 | 1.81 | 2.69 | 4.94 |
| | 4 | 3.000 | 0.44 | 0.81 | 0.85 | 1.81 | 2.69 | 5.31 |
| 6.00 | 1 (Std.) | 2.500 | 0.44 | 0.69 | 1.09 | 1.69 | 2.69 | 4.94 |
| | 2 | 4.000 | 0.44 | 0.69 | 0.78 | 1.69 | 2.69 | 6.19 |
| | 3 | 3.000 | 0.44 | 0.69 | 0.85 | 1.69 | 2.69 | 5.31 |
| | 4 | 3.500 | 0.44 | 0.69 | 0.78 | 1.69 | 2.69 | 6.06 |
| 7.00 | 1 (Std.) | 3.000 | 0.44 | 1.06 | 0.84 | 1.69 | 2.69 | 5.31 |
| | 2 | 5.000 | 0.81 | 1.15 | 1.15 | 2.06 | 3.06 | 7.44 |
| | 3 | 3.500 | 0.44 | 1.07 | 0.78 | 1.69 | 2.69 | 6.06 |
| | 4 | 4.000 | 0.44 | 0.94 | 0.78 | 1.69 | 2.69 | 6.19 |
| | 5 | 4.500 | 0.44 | 0.94 | 0.78 | 1.69 | 2.69 | 6.94 |
| 8.00 | 1 (Std.) | 3.500 | 0.44 | 1.06 | 0.78 | 1.69 | 2.69 | 6.06 |
| | 2 | 5.500 | 0.81 | 1.15 | 1.15 | 2.06 | 3.06 | 8.31 |
| | 3 | 4.000 | 0.44 | 0.94 | 0.78 | 1.69 | 2.69 | 6.19 |
| | 4 | 4.500 | 0.44 | 0.94 | 0.78 | 1.69 | 2.69 | 6.94 |
| | 5 | 5.000 | 0.81 | 1.15 | 1.15 | 2.06 | 3.06 | 7.44 |

[1] 'V' and 'W' dimensions are for Models J & JB and tie rod retained gland styles.

View Table of Contents

# 2HD/3HD & 2HB/3HB Buffer Seal Rod Gland Cartridge Kit and Rod Seal Kit Parts Identification

- Gland Cartridge Kits contain items 12, 13, 14, 40, 41 and 45 (43 in class 2, 5, and 6 kits only)
- Rod Seal Kits contain items 12, 13, 40, 41 and 45 (43 in class 2, 5 and 6 kits only)

**Parts List —** Buffer Seal Gland

| Symbol | Description |
|---|---|
| 12 | Buffer Seal |
| 13 | Buffer Seal Energizer |
| 14 | Rod Gland |
| 40 | Rod Wiper |
| 41 | Rod Seal |
| 43 | Back-up Washer, rod seal |
| 45 | Gland O-Ring |

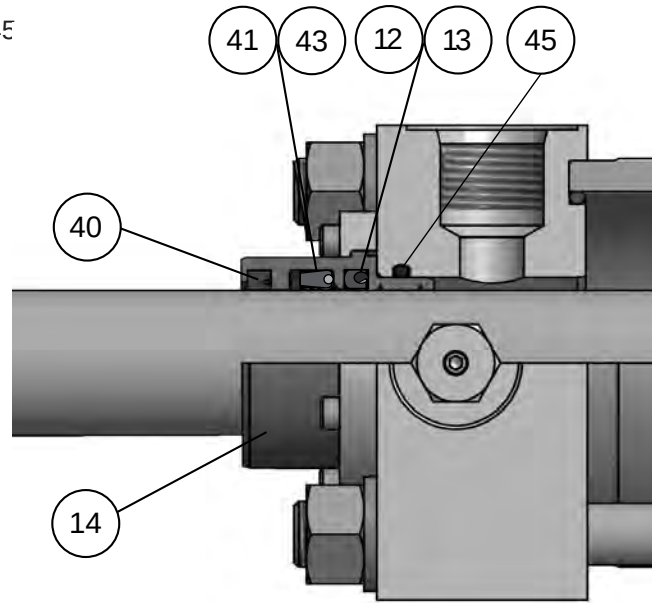


## Series 2HD / 3HD & 2HB / 3HB Buffer Seal Gland Cartridge Kits and Rod Seal Kits

| Rod Ø | Seal Type | | | | | | | | | |
|---|---|---|---|---|---|---|---|---|---|---|
| | Class 1 Service (Polyurethane & Nitrile) | | Class 2 Service (Nitrile) | | Class 3 Service (EPR) | | Class 5 Service (FKM) | | Class 6 Service (Nitroxile) | |
| | Contains 1 ea. Sym.# 14, 40, 41 & 45 | | Contains 1 ea. Sym.# 14, 40, 41 & 45 | | Contains 1 ea. Sym.# 14, 40, 41 & 45 | | Contains 1 ea. Sym.# 14, 40, 41 & 45 | | Contains 1 ea. Sym.# 14, 40, 41 & 45 | |
| | Gland Cartridge Kits | Rod Seal Kits[1] | Gland Cartridge Kits | Rod Seal Kits[1] | Gland Cartridge Kits | Rod Seal Kits[1] | Gland Cartridge Kits | Rod Seal Kits[1] | Gland Cartridge Kits | Rod Seal Kits[1] |
| 0.625 | RG2HDB0061 | RK2HDB0061 | RG2HDB0062 | RK2HDB0062 | RG2HDB0063 | RK2HDB0063 | RG2HDB0065 | RK2HDB0065 | RG2HDB0066 | RK2HDB0066 |
| 1.000 | RG2HDB0101 | RK2HDB0101 | RG2HDB0102 | RK2HDB0102 | RG2HDB0103 | RK2HDB0103 | RG2HDB0105 | RK2HDB0105 | RG2HDB0106 | RK2HDB0106 |
| 1.375 | RG2HDB0131 | RK2HDB0131 | RG2HDB0132 | RK2HDB0132 | RG2HDB0133 | RK2HDB0133 | RG2HDB0135 | RK2HDB0135 | RG2HDB0136 | RK2HDB0136 |
| 1.750 | RG2HDB0171 | RK2HDB0171 | RG2HDB0172 | RK2HDB0172 | RG2HDB0173 | RK2HDB0173 | RG2HDB0175 | RK2HDB0175 | RG2HDB0176 | RK2HDB0176 |
| 2.000 | RG2HDB0201 | RK2HDB0201 | RG2HDB0202 | RK2HDB0202 | RG2HDB0203 | RK2HDB0203 | RG2HDB0205 | RK2HDB0205 | RG2HDB0206 | RK2HDB0206 |
| 2.500 | RG2HDB0251 | RK2HDB0251 | RG2HDB0252 | RK2HDB0252 | RG2HDB0253 | RK2HDB0253 | RG2HDB0255 | RK2HDB0255 | RG2HDB0256 | RK2HDB0256 |
| 3.000 | RG2HDB0301 | RK2HDB0301 | RG2HDB0302 | RK2HDB0302 | RG2HDB0303 | RK2HDB0303 | RG2HDB0305 | RK2HDB0305 | RG2HDB0306 | RK2HDB0306 |
| 3.500 | RG2HDB0351 | RK2HDB0351 | RG2HDB0352 | RK2HDB0352 | RG2HDB0353 | RK2HDB0353 | RG2HDB0355 | RK2HDB0355 | RG2HDB0356 | RK2HDB0356 |
| 4.000 | RG2HDB0401 | RK2HDB0401 | RG2HDB0402 | RK2HDB0402 | RG2HDB0403 | RK2HDB0403 | RG2HDB0405 | RK2HDB0405 | RG2HDB0406 | RK2HDB0406 |
| 4.500 | RG2HDB0451 | RK2HDB0451 | RG2HDB0452 | RK2HDB0452 | RG2HDB0453 | RK2HDB0453 | RG2HDB0455 | RK2HDB0455 | RG2HDB0456 | RK2HDB0456 |
| 5.000 | RG2HDB0501 | RK2HDB0501 | RG2HDB0502 | RK2HDB0502 | RG2HDB0503 | RK2HDB0503 | RG2HDB0505 | RK2HDB0505 | RG2HDB0506 | RK2HDB0506 |
| 5.500 | RG2HDB0551 | RK2HDB0551 | RG2HDB0552 | RK2HDB0552 | RG2HDB0553 | RK2HDB0553 | RG2HDB0555 | RK2HDB0555 | RG2HDB0556 | RK2HDB0556 |

[1]Rod seal kits do not include item 14.

View Table of Contents

**Modifications:** The following modifications can be supplied on most Parker cylinders.

## Metallic Rod Scraper

When specified metallic rod scrapers can be supplied instead of the standard synthetic rubber wiperseal. Recommended in applications where contaminants tend to cling to the extended piston rod and would damage the synthetic rubber wiperseal. Installation of metallic rod scraper does not affect cylinder dimensions. It is available at extra cost.

### Parker Crown Wiper™ for Series 2HD / 2HB and 7.00" & 8.00" bore 3HD / 3HB

For environments that contain fine abrasive particulate specify the Crown Wiper option. The Crown Wiper is a proven superior alternative to piston rod end boots or metallic wipers that can ingest particulate. It has a sharp leading edge to effectively clean the piston rod and a beveled shape to prevent contaminant intrusion by channeling it away from the gland. It also acts as a secondary seal to wipe clean any oil film adhering to the rod on the extend stroke.

Standard Crown Wiper material for Seal Class 1 and 2 service is durable polyurethane. Optional FKM material is available for Class 5 service. The Crown Wiper requires a unique gland but does not change cylinder mounting dimensions

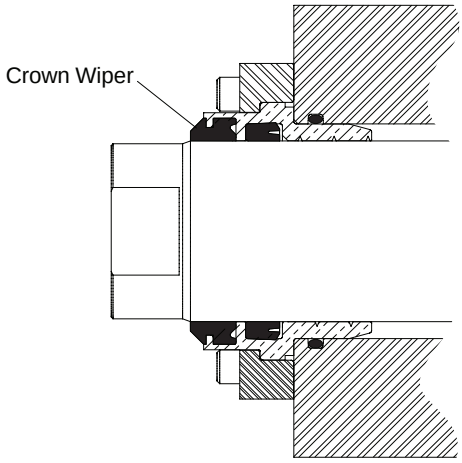


Crown Wiper Rod Gland Kits are available to retrofit existing 2HD / 2HB & 3HD / 3HB cylinders. See Section F Replacement Parts for details.

### Rod End Boots

Cylinders have a hardened bearing surface on the piston rod to resist external damage, and are equipped with the high efficiency “Wiperseal” to remove external dust and dirt. Exposed piston rods that are subjected to contaminants with air hardening properties, such as paint, should be protected. In such applications, the use of a collapsing cover should be considered. This is commonly referred to as a “boot”. Calculate the longer rod end required to accommodate the collapsed length of the boot from the following data.

| | | | | | | | | | | | |
|---|---|---|---|---|---|---|---|---|---|---|---|
| **LF** | .13 | .13 | .13 | .13 | .13 | .13 | .10 | .10 | .10 | .10 | .10 |
| **OD** | 2.25 | 2.63 | 3.00 | 3.38 | 3.75 | 4.38 | 5.13 | 5.63 | 6.25 | 7.00 | 7.50 |
| **MM** | .625 | 1.000 | 1.375 | 1.750 | 2.000 | 2.500 | 3.000 | 3.500 | 4.000 | 5.000 | 5.500 |

To determine extra length of piston rod required to accommodate boot, calculate

BL = Stroke x LF + 1.13"

BL + Std. W or WF + A = length of piston rod to extend beyond the retainer.

NOTE: Check all Boot O.D’s against std. “E” dimension from catalog. This may be critical on foot mounted cylinders.

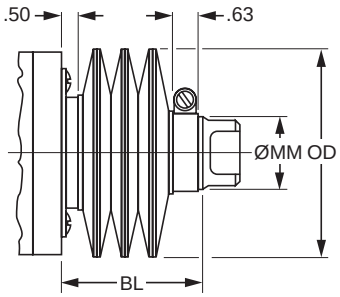


### Gland Drain

Hydraulic fluids tend to adhere to the piston rods, during the extend stroke, and an accumulation of fluid can collect in the cavity behind the gland wiperseal on long stroke cylinders.

A 1/8" NPTF gland drain port can be provided in the gland retainer. A passage in the gland between the wiperseal and lipseal is provided to drain off any accumulation of fluid between the seals. See drawing below.

It is recommended that the gland drain port be piped back to the fluid reservoir and that the reservoir be located below the level of the head of the cylinder.

On 1.50" bore with 0.625" rod the drain port is located in the head adjacent to the port. The retainer thickness on 1.50" bore with 1.000" rod and gland drain is increased to 0.63". On 2.00"-8.00" bore sizes the drain port is located in the retainer as shown. On Style JJ with gland drain, the drain port is in the head.

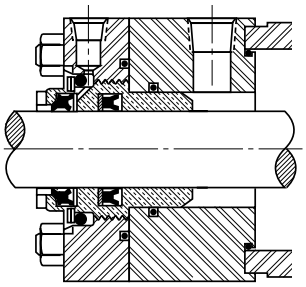

### Air Bleeds

In most hydraulic circuits, cylinders are considered self-bleeding when cycled full stroke. If air bleeds are required and specified, 1/8" NPTF Air Bleed Ports for venting air can be provided at both ends of the cylinder body, or on the head or cap. To order, specify “Bleed Port”, and indicate position desired.

View Table of Contents

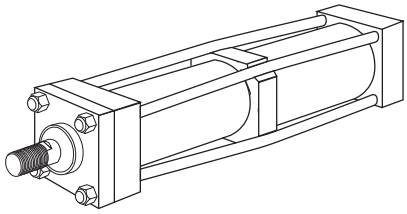

## Tie Rod Supports

**Rigidity of Envelope –** Parker heavy duty hydraulic cylinders have advantages in rigidity within the limits of the cylinder tube to resist buckling. For long stroke tie rod cylinders, within practical limits, Parker provides Tie Rod Supports (see table below) that move the tie rod centerlines radially outward.

To avoid the need for Tie Rod Supports, specify Series 2HB non-tie rod style for long stroke applications.

Standard tie rod supports are kept within the envelope dimensions of the head and cap, and generally do not interfere with mounting a long cylinder.

| Number of Supports Required | Bore Ø | Stroke (Inches) | | | | | | | | | | | |
|---|---|---|---|---|---|---|---|---|---|---|---|---|---|
| | | 36 | 48 | 60 | 72 | 84 | 96 | 108 | 120 | 132 | 144 | 156 | 168 |
| | 1.50 | — | — | 1 | 1 | 1 | 2 | 2 | 2 | 3 | 3 | 3 | 4 |
| | 2.00 | — | — | — | 1 | 1 | 1 | 1 | 2 | 2 | 2 | 2 | 3 |
| | 2.50 | — | — | — | — | — | 1 | 1 | 1 | 1 | 1 | 2 | 2 |
| | 3.25 | — | — | — | — | — | — | — | 1 | 1 | 1 | 1 | 1 |
| | 4.00 | — | — | — | — | — | — | — | — | — | 1 | 1 | 1 |

Note: 5.00" through 14.00" bore sizes — no supports required.

## Stroke Adjusters

For the requirement where adjusting the stroke is specified. Parker has several designs to offer, one of which is illustrated below. This is suitable for infrequent adjustment and is economical[1].

| Bore Ø | D | J | K | L (Max.) |
|---|---|---|---|---|
| 1.50 | 1/2 - 20 | 0.31 | 0.94 | 5 |
| 2.00 | 3/4 - 16 | 0.44 | 1.25 | 8 |
| 2.50, 3.25 | 1 - 14 | 0.63 | 1.69 | 9 |
| 4.00 | 1 1/2 - 12 | 0.94 | 2.13 | 18 |
| 5.00 | 2 - 12 | 0.94 | 2.69 | 20 |
| 6.00 | 2 1/2 - 12 | 1.69 | 3.13 | 20 |
| 7.00 | 3 - 12 | 2.00 | 3.25 | 20 |
| 8.00 | 3 1/2 - 12 | 2.38 | 3.50 | 20 |

Here a "retracting stroke adjuster" must be called for in specifications, and the length *of the adjustment must be specified*.

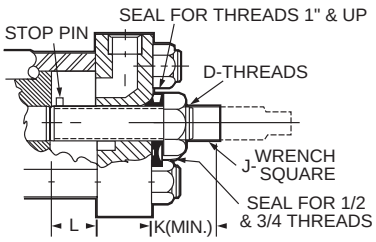


Where frequent adjustment or cushions at the cap end are required, other designs are available according to application needs.

[1] Infrequent is defined by positioning the retract stroke in a couple of attempts at original machine set up. The frequent stroke adjuster is recommended for adjustments required after the original equipment has been adjusted by the original machine manufacturer.

## Thrust Key Mountings

Thrust key mountings eliminate the need of using fitted bolts or external keys on side mounted cylinders. Parker cylinders in mounting styles CP and FP can be provided with the gland retainer plate extended below the mounting side of the cylinder (see illustration below). This extended retainer plate can then be fitted into a keyway milled into the mounting surface of the machine member. This is referred to as the "P" Modification of any side mounting style.

Note: Please consult factory when replacing HD Series cylinders.

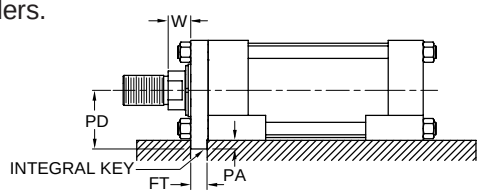


| Bore Ø | FA (Series 2HD/ 3HD, 2HB/3HB) | FT (Series 2H/3H) | PA | PD Mtg. Styles CP & FP |
|---|---|---|---|---|
| 1.50 | .361 -.001 +.000 | .312 -.002 +.000 | 0.19 | 1.44 |
| 2.00 | .611 -.001 +.000 | .562 -.002 +.000 | 0.31 | 1.81 |
| 2.50 | .611 -.001 +.000 | .562 -.002 +.000 | 0.31 | 2.06 |
| 3.25 | .736 -.001 +.000 | .687 -.003 +.000 | 0.38 | 2.63 |
| 4.00 | .861 -.001 +.000 | .812 -.003 +.000 | 0.44 | 2.94 |
| 5.00 | .861 -.001 +.000 | .812 -.003 +.000 | 0.44 | 3.69 |
| 6.00 | .986 -.001 +.000 | .937 -.003 +.000 | 0.50 | 4.25 |
| 7.00 | .986 -.001 +.000 | .937 -.003 +.000 | 0.50 | 4.75 |
| 8.00 | .986 -.001 +.000 | .937 -.003 +.000 | 0.50 | 5.25 |

## Metric Piston Rod Thread

The table below lists the standard thread supplied when Piston Rod Thread type M is specified in the cylinder model code.

| MM Rod Ø | Thread | | A |
|---|---|---|---|
| | Style 8M CC | Styles 4M & 9M KK | |
| 0.625 | M12x1.5 | M10x1.5 | 0.75 |
| 1.000 | M22x1.5 | M20x1.5 | 1.13 |
| 1.375 | M30x2 | M26x1.5 | 1.63 |
| 1.750 | M39x2 | M33x2 | 2.00 |
| 2.000 | M45x2 | M39x2 | 2.25 |
| 2.500 | M56x2 | M48x2 | 3.00 |
| 3.000 | M68x2 | M58x2 | 3.50 |
| 3.500 | M76x2 | M64x2 | 3.50 |
| 4.000 | M95x2 | M76x2 | 4.00 |
| 4.500 | M110x2 | M80x2 | 4.50 |
| 5.000 | M110x2 | M90x2 | 5.00 |
| 5.500 | M130x2 | M100x2 | 5.50 |
| 7.000 | - | M125x4 | 7.00 |
| 8.000 | - | M140x4 | 8.00 |
| 9.000 | - | M160x4 | 9.00 |
| 10.000 | - | M180x4 | 10.00 |

View Table of Contents

# Global Shield™ Rod Coating Technology
# A Dramatically Different Approach to Resisting Corrosion

Parker's **Global Shield** rod coating technology is specifically designed to address corrosion resistance requirements of challenging industrial applications. When compared to traditional rod coatings, **Global Shield** has the following advantages:

- **Significantly Improved Corrosion Resistance** from the single-layer, fully dense, submicron structure and the lack of micro cracks inherent to chrome plating.
- **Lower Friction**
- **Ductile and Tough** so when the rod bends, it does too
- **Engineered Hardness** (HRC 54 minimum) for wear-resistance

The **value** that you will receive from **Global Shield** includes:

- **Less Downtime** from reduced maintenance intervals (cylinder repairs and seal replacements)
- **Longer Seal Life** in corrosive environments
- **Lower Service Costs** since you won't need to replace the piston rod due to corrosion

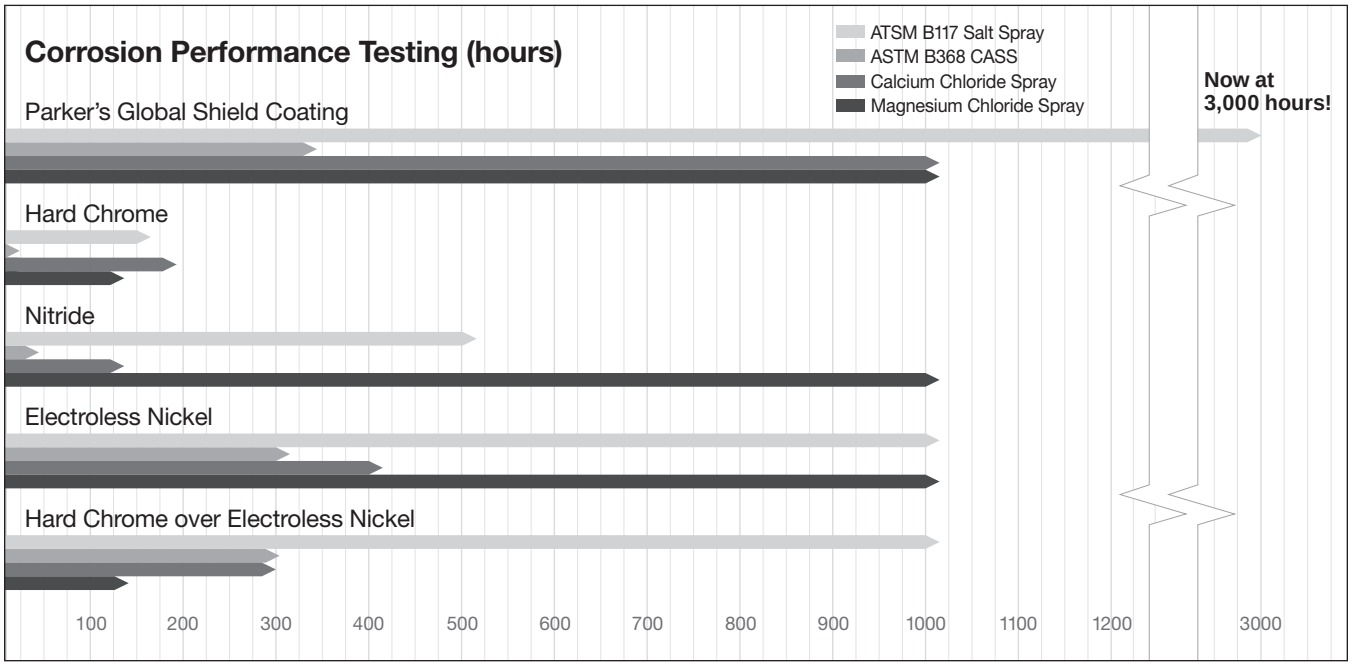


## Performance Validated in the Lab and in the field

This breakthrough proprietary technology, owned and manufactured by Parker Hannifin Corporation, has been thoroughly tested in the lab and in the field to validate performance in the areas of corrosion and dynamic wear resistance. Cylinders protected with Parker's Global Shield coating have demonstrated resistance to corrosion up to 8x longer than conventional coatings. Tests also confirm leak-free performance even after 1 million cycles and 2,000 hours of salt spray.

## Availability

- Rod diameters from ½" to 15"
- Rod lengths to 13 feet
- Standard thickness – 0.001"
  *Up to 0.020" available; corrosion protection increases as the thickness increases*
- Standard substrate – 1045/1050 carbon steel
  *Other substrates available*

## How to Order

Enter an 'S' in the Special Modifications field of the model number and specify Global Shield Piston Rod Coating. Unless otherwise specified, standard 0.001" thickness will be supplied.

For additional Global Shield information see Bulletin HY08-0896.

View Table of Contents

# Section H

## Engineering Data


| | |
|---|---|
| Theoretical Push & Pull Forces | 164-165 |
| 2H / 2HD / 3H / 3HD / 3H Large Bore Cylinder Weights | 166 |
| 2HB & 3HB Cylinder Weights | 167 |
| Operating Fluids and Seals / Temperature Range | 168 |
| Fluids and Temperature Range / Pressure Ratings | 169 |
| Piston & Gland Friction / Piston Orifice | 170-171 |
| Ports | 172-173 |
| Stroke Data / Mounting Groups | 174 |
| Stop Tubing | 175 |
| Piston Rod Selection Data | 176-178 |
| Cushioning | 179-184 |
| Cylinder Safety Guide | 186-187 |
| Offer of Sale | 188 |

View Table of Contents

## Theoretical Push Forces for Hydraulic Cylinders

| Cylinder Bore Ø | Piston Area (Sq. In.) | Cylinder Push Stroke Force in Pounds at Various Pressures | | | | | | |
|---|---|---|---|---|---|---|---|---|
| | | 100 | 250 | 500 | 1000 | 1500 | 2000 | 3000 |
| 1.50 | 1.77 | 177 | 443 | 885 | 1770 | 2651 | 3540 | 5310 |
| 2.00 | 3.14 | 314 | 785 | 1570 | 3140 | 4712 | 6280 | 9420 |
| 2.50 | 4.91 | 491 | 1228 | 2455 | 4910 | 7363 | 9820 | 14730 |
| 3.25 | 8.30 | 830 | 2075 | 4150 | 8300 | 12444 | 16600 | 24900 |
| 4.00 | 12.57 | 1257 | 3143 | 6285 | 12570 | 18850 | 25140 | 37710 |
| 5.00 | 19.64 | 1964 | 4910 | 9820 | 19640 | 29453 | 39280 | 58920 |
| 6.00 | 28.27 | 2827 | 7068 | 14135 | 28270 | 42412 | 56540 | 84810 |
| 7.00 | 38.49 | 3849 | 9623 | 19245 | 38490 | 57727 | 76980 | 115470 |
| 8.00 | 50.27 | 5027 | 12568 | 25135 | 50270 | 75398 | 100540 | 150810 |
| 10.00 | 78.54 | 7854 | 19635 | 39270 | 78540 | 117810 | 157080 | 235620 |
| 12.00 | 113.10 | 11310 | 28275 | 56550 | 113100 | 169650 | 226200 | 339300 |
| 14.00 | 153.94 | 15394 | 38485 | 76970 | 153940 | 230910 | 307880 | 461820 |
| 16.00 | 201.06 | 20106 | 50265 | 100530 | 201060 | 301590 | 402120 | 603180 |
| 18.00 | 254.47 | 25447 | 63620 | 127230 | 254470 | 381700 | 508940 | 763410 |
| 20.00 | 314.16 | 31416 | 78540 | 157080 | 314160 | 471240 | 628320 | 942480 |

### General Formula

The cylinder output forces are derived from the formula:

$$F = P \times A$$

Where F = Force in pounds.

P = Pressure at the cylinder in pounds per square inch, gauge.

A = Effective area of cylinder piston in square inches.

View Table of Contents

## Theoretical Pull Forces for Hydraulic Cylinders

| Cylinder Bore Ø | Piston Rod Ø | Piston Rod Area (Sq. In.) | Cylinder Pull Force in Pounds at Various Pressures (psi) | | | | | | |
|---|---|---|---|---|---|---|---|---|---|
| | | | 100 | 250 | 500 | 1000 | 1500 | 2000 | 3000 |
| 1.50 | 0.625 | 0.307 | 146 | 365 | 730 | 1460 | 2190 | 2920 | 4380 |
| | 1.000 | 0.785 | 98 | 245 | 491 | 982 | 1473 | 1964 | 2946 |
| 2.00 | 1.000 | 0.785 | 236 | 589 | 1178 | 2355 | 3533 | 4710 | 7065 |
| | 1.375 | 1.48 | 166 | 414 | 828 | 1655 | 2483 | 3310 | 4965 |
| 2.50 | 1.000 | 0.785 | 413 | 1031 | 2063 | 4125 | 6188 | 8250 | 12375 |
| | 1.375 | 1.48 | 343 | 856 | 1713 | 3425 | 5138 | 6850 | 10275 |
| | 1.750 | 2.41 | 250 | 625 | 1250 | 2500 | 3750 | 5000 | 7500 |
| 3.25 | 1.375 | 1.48 | 682 | 1704 | 3408 | 6815 | 10223 | 13630 | 20445 |
| | 1.750 | 2.41 | 589 | 1473 | 2945 | 5890 | 8835 | 11780 | 17670 |
| | 2.000 | 3.14 | 516 | 1290 | 2580 | 5160 | 7740 | 10320 | 15480 |
| 4.00 | 1.750 | 2.41 | 1016 | 2540 | 5080 | 10160 | 15240 | 20320 | 30480 |
| | 2.000 | 3.14 | 943 | 2358 | 4715 | 9430 | 14145 | 18860 | 28290 |
| | 2.500 | 4.91 | 766 | 1915 | 3830 | 7660 | 11490 | 15320 | 22980 |
| 5.00 | 2.000 | 3.14 | 1650 | 4125 | 8250 | 16500 | 24750 | 33000 | 49500 |
| | 2.500 | 4.91 | 1473 | 3683 | 7365 | 14730 | 22095 | 29460 | 44190 |
| | 3.000 | 7.07 | 1257 | 3143 | 6285 | 12570 | 18855 | 25140 | 37710 |
| | 3.500 | 9.62 | 1002 | 2505 | 5010 | 10020 | 15030 | 20040 | 30060 |
| 6.00 | 2.500 | 4.91 | 2336 | 5840 | 11680 | 23360 | 35040 | 46720 | 70080 |
| | 3.000 | 7.07 | 2120 | 5300 | 10600 | 21200 | 31800 | 42400 | 63600 |
| | 3.500 | 9.62 | 1865 | 4663 | 9325 | 18650 | 27975 | 37300 | 55950 |
| | 4.000 | 12.57 | 1570 | 3925 | 7850 | 15700 | 23550 | 31400 | 47100 |
| 7.00 | 3.000 | 7.07 | 3142 | 7855 | 15710 | 31420 | 47130 | 62840 | 94260 |
| | 3.500 | 9.62 | 2887 | 7218 | 14435 | 28870 | 43305 | 57740 | 86610 |
| | 4.000 | 12.57 | 2592 | 6480 | 12960 | 25920 | 38880 | 51840 | 77760 |
| | 4.500 | 15.90 | 2259 | 5648 | 11295 | 22590 | 33885 | 45180 | 67770 |
| | 5.000 | 19.63 | 1886 | 4715 | 9430 | 18860 | 28290 | 37720 | 56580 |
| 8.00 | 3.500 | 9.62 | 4065 | 10163 | 20325 | 40650 | 60975 | 81300 | 121950 |
| | 4.000 | 12.57 | 3770 | 9425 | 18850 | 37700 | 56550 | 75400 | 113100 |
| | 4.500 | 15.90 | 3437 | 8593 | 17185 | 34370 | 51555 | 68740 | 103110 |
| | 5.000 | 19.63 | 3064 | 7660 | 15320 | 30640 | 45960 | 61280 | 91920 |
| | 5.500 | 23.76 | 2651 | 6628 | 13255 | 26510 | 39765 | 53020 | 79530 |
| 10.00 | 4.500 | 15.90 | 6264 | 15660 | 31320 | 62640 | 93960 | 125280 | 187920 |
| | 5.000 | 19.63 | 5891 | 14728 | 29455 | 58910 | 88365 | 117820 | 176730 |
| | 5.500 | 23.76 | 5478 | 13695 | 27390 | 54780 | 82170 | 109560 | 164340 |
| | 7.000 | 38.48 | 4006 | 10015 | 20030 | 40060 | 60090 | 80120 | 120180 |
| 12.00 | 5.500 | 23.76 | 8934 | 22335 | 44670 | 89340 | 134010 | 178680 | 268020 |
| | 7.000 | 38.48 | 7462 | 18655 | 37310 | 74620 | 111930 | 149240 | 223860 |
| | 8.000 | 50.26 | 6284 | 15710 | 31420 | 62840 | 94260 | 125680 | 188520 |
| 14.00 | 7.000 | 38.48 | 11546 | 28865 | 57730 | 115460 | 173190 | 230920 | 346380 |
| | 8.000 | 50.26 | 10368 | 25920 | 51840 | 103680 | 155520 | 207360 | 311040 |
| | 10.000 | 78.54 | 7540 | 18850 | 37700 | 75400 | 113100 | 150800 | 226200 |
| 16.00 | 8.000 | 50.26 | 15080 | 37700 | 75400 | 150800 | 226200 | 301600 | 452400 |
| | 9.000 | 63.62 | 13744 | 34360 | 68720 | 137440 | 206160 | 274880 | 412320 |
| | 10.000 | 78.54 | 12252 | 30630 | 61260 | 122520 | 183780 | 245040 | 367560 |
| 18.00 | 9.000 | 63.62 | 19085 | 47713 | 95425 | 190850 | 286275 | 381700 | 572550 |
| | 10.000 | 78.54 | 17593 | 43983 | 87965 | 175930 | 263895 | 351860 | 527790 |
| 20.00 | 10.000 | 78.54 | 23562 | 58905 | 117810 | 235620 | 353430 | 471240 | 706860 |

View Table of Contents

The weights shown below are for standard Series 2H / 2HD and 3H / 3HD hydraulic cylinders equipped with various diameter piston rods. To determine the net weights of a cylinder, first select the proper basic weight for zero stroke, then calculate the weight of the cylinder stroke and add the result to the basic weight. For extra rod extension use piston rod weights per inch shown in Table C. Weights of cylinders with intermediate rods may be estimated from table below by taking the difference between the piston rod weights per inch and adding it to the Code 1 weight for the cylinder bore size involved.

**Table A** Cylinder Weights, in pounds, for Series 2H / 2HD, 3H / 3HD (7.00" & 8.00") hydraulic cylinders

| Bore Ø | Rod Ø | Rod Code | Single Rod Cylinders Basic Weight Zero Stroke | | Add Per Inch of Stroke | Double Rod Cylinders Basic Weight Zero Stroke | | Add Per Inch of Stroke |
|---|---|---|---|---|---|---|---|---|
| | | | F, H, HB, J, JB T, TB, TC, TD | BB, C, D, DB, DD, DE, HH, JJ, SB, SE | | KF, KJ KJB KT, KTB, KTD | KC, KD, KDD, KDE, KJJ | |
| 1.50 | 0.625 | 1 | 7.8 | 9.0 | 0.5 | 9.7 | 10.8 | 0.6 |
| | 1.000 | 2 | 8.4 | 9.3 | 0.6 | 9.1 | 10.7 | 0.8 |
| 2.00 | 1.000 | 1 | 11.6 | 13.2 | 0.8 | 14.6 | 16.8 | 1.0 |
| | 1.375 | 2 | 13.5 | 17.1 | 1.0 | 19.4 | 20.6 | 1.4 |
| 2.50 | 1.000 | 1 | 17.0 | 19.5 | 1.1 | 21.0 | 24.5 | 1.3 |
| | 1.750 | 2 | 22.5 | 25.5 | 1.5 | 27.0 | 30.0 | 2.2 |
| 3.25 | 1.375 | 1 | 32.0 | 41.0 | 1.8 | 43.0 | 52.0 | 2.2 |
| | 2.000 | 2 | 37.0 | 46.0 | 2.2 | 48.0 | 57.0 | 3.1 |
| 4.00 | 1.750 | 1 | 48.0 | 53.0 | 2.5 | 59.0 | 63.0 | 3.2 |
| | 2.500 | 2 | 52.0 | 58.0 | 3.2 | 92.0 | 97.0 | 4.6 |
| 5.00 | 2.000 | 1 | 76.0 | 82.0 | 3.4 | 96.0 | 102.0 | 4.8 |
| | 3.500 | 2 | 88.0 | 86.0 | 5.2 | 117.0 | 123.0 | 7.9 |
| 6.00 | 2.500 | 1 | 125.0 | 133.0 | 5.2 | 153.0 | 159.0 | 6.6 |
| | 4.000 | 2 | 133.0 | 140.0 | 7.3 | 182.0 | 190.0 | 10.9 |
| 7.00 | 3.000 | 1 | 233.0 | 242.0 | 6.7 | 320.0 | 339.0 | 8.7 |
| | 5.000 | 2 | 240.0 | 253.0 | 10.3 | 341.0 | 360.0 | 15.9 |
| 8.00 | 3.500 | 1 | 262.0 | 276.0 | 9.0 | 323.0 | 331.0 | 11.7 |
| | 5.500 | 2 | 300.0 | 309.0 | 13.0 | 390.0 | 411.0 | 19.7 |

**Table B** Cylinder Weights, in pounds, for Series 3H large bore hydraulic cylinders

| Bore Ø | Rod Ø | Rod Code | Single Rod Cylinders Basic Weight Zero Stroke | | | | | Double Rod Cylinders | |
|---|---|---|---|---|---|---|---|---|---|
| | | | D, DB | DD, JJ, HH | JB, HB | BB, C | Add Per Inch of Stroke | Basic Weight Zero Stroke Add to All Mounting Styles | Add Per Inch of Stroke |
| 10.00 | 4.500 | 1 | 562 | 646 | 684 | 607 | 15 | 43 | 20 |
| | 5.000 | 3 | 574 | 656 | 695 | 619 | 16 | 50 | 21 |
| | 5.500 | 4 | 583 | 667 | 705 | 628 | 17 | 64 | 24 |
| | 7.000 | 2 | 620 | 704 | 742 | 665 | 21 | 101 | 32 |
| 12.00 | 5.500 | 1 | 924 | 1057 | 1136 | 1000 | 22 | 64 | 29 |
| | 7.000 | 3 | 961 | 1094 | 1173 | 1036 | 26 | 101 | 37 |
| | 8.000 | 2 | 1022 | 1155 | 1234 | 1097 | 29 | 162 | 43 |
| 14.00 | 7.000 | 1 | 1335 | 1520 | 1582 | 1485 | 28 | 101 | 39 |
| | 8.000 | 3 | 1396 | 1581 | 1643 | 1546 | 31 | 162 | 45 |
| | 10.000 | 2 | 1496 | 1681 | 1743 | 1646 | 39 | 262 | 61 |

| Bore Ø | Rod Ø | Rod Code | Single Rod Cylinders Basic Weight Zero Stroke | | | | Double Rod Cylinders | |
|---|---|---|---|---|---|---|---|---|
| | | | JJ, HH | JB, HB | BB | Add Per Inch of Stroke | Basic Weight Zero Stroke Add to All Mounting Styles | Add Per Inch of Stroke |
| 16.00 | 8.000 | 1 | 2073 | 2257 | 2226 | 35 | 149 | 49 |
| | 9.000 | 3 | 2122 | 2305 | 2275 | 39 | 198 | 57 |
| | 10.000 | 4 | 2181 | 2364 | 2334 | 43 | 257 | 65 |
| 18.00 | 9.000 | 1 | 3165 | 3256 | 3330 | 45 | 198 | 63 |
| | 10.000 | 3 | 3224 | 3315 | 3390 | 50 | 257 | 72 |
| 20.00 | 10.000 | 1 | 4231 | 4406 | 4551 | 57 | 257 | 79 |

**Table C** Extra weight for longer than standard rod extensions can be calculated from the table below.

| Rod Ø | Piston Rod Weight Per Inch | Rod Ø | Piston Rod Weight Per Inch | Rod Ø | Piston Rod Weight Per Inch |
|---|---|---|---|---|---|
| 0.625 | 0.09 | 2.500 | 1.40 | 5.000 | 5.56 |
| 1.000 | 0.22 | 3.000 | 2.00 | 5.500 | 6.72 |
| 1.375 | 0.42 | 3.500 | 2.72 | 7.000 | 10.89 |
| 1.750 | 0.68 | 4.000 | 3.56 | 8.000 | 14.22 |
| 2.000 | 0.89 | 4.500 | 4.51 | 10.000 | 22.23 |

# Cylinder Weights – Series 2HB/3HB

## Engineering Data

View Table of Contents

The weights shown below are for standard Series 2HB and 3HB hydraulic cylinders with various diameter piston rods. To determine the net weight of a cylinder, first select the proper basic weight for zero stroke, then calculate the weight of the cylinder stroke and add the result to the basic weight. For extra rod extension use piston rod weights per inch shown in Table B. Weights of cylinders with intermediate rods may be estimated from the table below by taking the difference between the piston rod weights per inch and adding it to the Code 1 weight for the cylinder bore size involved.

**Table A** Cylinder weights, in pounds, for Series 2HB and 3HB 7.00" - 8.00" hydraulic cylinders

| Bore Ø | Rod Ø | Rod Code | Single Rod Cylinders Basic Weight Zero Stroke | | | Add Per Inch of Stroke | Double Rod Cylinders Basic Weight Zero Stroke | | Add Per Inch of Stroke |
|---|---|---|---|---|---|---|---|---|---|
| | | | T | C, D, DB, DD, DE | BB, HH, JJ, SB, SE | | KT | KC, KD, KDD, KDE, KJJ | |
| 1.50 | 0.625 | 1 | 9.1 | 10.3 | 10.3 | 0.4 | 11.0 | 12.1 | 0.5 |
| | 1.000 | 2 | 9.7 | 10.6 | 10.6 | 0.5 | 10.4 | 12.0 | 0.7 |
| 2.00 | 1.000 | 1 | 13.6 | 15.2 | 15.3 | 0.6 | 16.6 | 18.9 | 0.8 |
| | 1.375 | 2 | 15.5 | 19.1 | 19.2 | 0.8 | 21.4 | 22.7 | 1.2 |
| 2.50 | 1.000 | 1 | 19.5 | 22.0 | 22.1 | 0.8 | 23.5 | 27.1 | 1.1 |
| | 1.750 | 2 | 25.0 | 28.0 | 28.1 | 1.3 | 29.5 | 32.6 | 2.0 |
| 3.25 | 1.375 | 1 | 37.3 | 46.3 | 46.5 | 1.4 | 48.3 | 57.5 | 1.8 |
| | 2.000 | 2 | 42.3 | 51.3 | 51.5 | 1.9 | 53.3 | 62.5 | 2.8 |
| 4.00 | 1.750 | 1 | 55.6 | 60.6 | 60.8 | 1.8 | 66.6 | 70.8 | 2.5 |
| | 2.500 | 2 | 59.6 | 65.6 | 65.8 | 2.6 | 99.6 | 104.8 | 4.0 |
| 5.00 | 2.000 | 1 | 92.1 | 98.1 | 98.8 | 2.7 | 112.1 | 118.8 | 3.6 |
| | 3.500 | 2 | 104.1 | 102.1 | 102.8 | 4.5 | 133.1 | 139.8 | 7.2 |
| 6.00 | 2.500 | 1 | 149.6 | 157.6 | 158.6 | 4.3 | 177.6 | 184.6 | 5.7 |
| | 4.000 | 2 | 157.6 | 164.6 | 165.6 | 6.5 | 206.6 | 215.6 | 10.0 |
| 7.00 | 3.000 | 1 | 271.1 | 280.1 | 281.9 | 5.3 | 358.1 | 378.9 | 7.3 |
| | 5.000 | 2 | 278.1 | 291.1 | 292.9 | 8.9 | 379.1 | 399.9 | 14.5 |
| 8.00 | 3.500 | 1 | 304.5 | 318.5 | 320.9 | 7.5 | 365.5 | 375.9 | 10.2 |
| | 5.500 | 2 | 342.5 | 351.5 | 353.9 | 11.5 | 432.5 | 455.9 | 18.2 |

**Table B** Extra weight for longer than standard rod extensions can be calculated from the table below.

| Rod Ø | Piston Rod Weight Per Inch | Rod Ø | Piston Rod Weight Per Inch | Rod Ø | Piston Rod Weight Per Inch |
|---|---|---|---|---|---|
| 0.625 | 0.09 | 2.000 | 0.89 | 4.000 | 3.56 |
| 1.000 | 0.22 | 2.500 | 1.40 | 4.500 | 4.51 |
| 1.375 | 0.42 | 3.000 | 2.00 | 5.000 | 5.56 |
| 1.750 | 0.68 | 3.500 | 2.72 | 5.500 | 6.72 |

View Table of Contents

## Operating Fluids and Temperature Range

Fluidpower cylinders are designed for use with pressurized air, hydraulic oil and fire resistant fluids, in some cases special seals are required.

### Class 1 – Standard Seals

Class 1 seals are intended for use with fluids such as: air, nitrogen, mineral base hydraulic oil or MIL-H-5606 within the temperature range of -10°F (-23°C) to +165°F (+74°C). Generally they are nitrile except for piston rod seals in hydraulic cylinders. However the individual seals may be nitrile (Buna-N) enhanced polyurethane, polymyte, PTFE or filled PTFE.

### Class 2 – Water Base Fluid Seals

Generally class 2 seals are intended for use with water base fluids within the temperature of -10°F (-23°C) to +165°F (+74°C) except for High Water Content Fluids (HWCF) in which case Class 6 seals should be used. Typical water base fluids are: Water, Water-Glycol, Water-in-Oil Emulsion, Houghto-Safe 27, 620, 5040, Mobil Pyrogard D, Shell Irus 905, Ucon Hydrolube J-4. These seals are nitrile.

### Class 3 – Ethylene Propylene (EPR) Seals

Class 3 seals are intended for use with some Phosphate Ester Fluids between the temperatures of -10°F (-23°C) to +130°F (+54°C). Typical fluids compatible with EPR seals are Skydrol 500 and 700. EPR are Ethylene Propylene. Note: EPR seals are not compatible with mineral base hydraulic oil or greases. Even limited exposure to these fluids will cause severe swelling.

### Class 4 – Low Temperature Nitrile Seals

Class 4 seals are intended for low temperature service with the same type of fluids as used with Class 1 seals within the temperature range of -50°F (-46°C) to +150°F (+66°C). Note: Certain fluids may react adversely with Class 4 seals compared to Class 1 seals.

### Class 5 – Fluorocarbon (FKM) Seals

Class 5 seals are intended for elevated temperature service or for some Phosphate Ester Fluids such as Houghto-Safe 1010, 1055, 1120; Fyrquel 150, 220, 300, 350; Mobile Pyrogard 42, 43, 53, and 55. However, they are not compatible with Phosphate Ester Fluids such as Skydrols. Class 5 seals can operate with a temperature range of -10°F (-23°C) to +300°F (+149°C). For temperatures above +250°F (+121°C) the cylinder must be manufactured with non-studded piston rod and thread and a pinned piston to rod connection.

### Class E – Fluorocarbon piston rod gland seals only

Intended for applications where only the rod gland is exposed to fluids or temperatures needing fluorocarbon compatibility.

### Class 6 – HWCF Seals

Class 6 seals are intended for High Water Content Fluids (HWCF) such as Houghton, Hydrolubric 120B and Sonsol Lubrizol within the temperature range of +40°F (+4°C) to +120°F (+49°C). Class 6 seals are special nitrile compound dynamic seals. Because of the viscosity of these fluids, cylinders specified with class 6 seals, will also be modified to have straight cushions.

### Class 8 – High Temperature Seals

Class 8 seals consist of filled PTFE piston seal, rod seals and wiperseal. They are intended for high temperature applications, to 400° F (204° C), where longer seal life and improved high temperature sealing performance is required. Minimum operating temperature is -15°F (-26°C). Body and gland o-ring seals will be fluorocarbon. Fluid resistance is comparable to Class 5. Cylinders incorporating Class 8 Seals will not have studded piston rods.

**Class N – Class 8 piston rod gland seals only – all other seals are fluorocarbon** Intended for applications where only the rod gland is exposed to fluids or temperatures needing filled PTFE seal compatibility.

### Warning ⚠

The piston rod stud and the piston rod to piston threaded connections are secured with an anaerobic adhesive which is temperature sensitive. Cylinders are assembled with anaerobic adhesive having a maximum temperature rating of +250°F (+121°C). Cylinders specified with all other seal compounds (built before 1997) were assembled with anaerobic adhesive having a maximum operating temperature rating +165°F (+74°C). These temperature limitations are necessary to prevent the possible loosening of the threaded connections. Cylinders originally manufactured (before 1997) with class 1 seals (Nitrile) that will be exposed to ambient temperatures above +165°F (+74°C) must be modified for higher temperature service. Contact the factory immediately and arrange for the piston to rod and the stud to piston rod connections to be properly re-assembled to withstand the higher temperature service.

### Water Service

Series 2H cylinders can be modified to make them more suitable for use with water as the operating medium. The modifications include chrome-plated cylinder bore; electroless nickel-plated head, cap and piston; chrome-plated 17-4 stainless steel piston rod; chrome plated cushion sleeve or cushion spear. Water and high water base fluid operated cylinders are best used on short stroke applications or where high pressure is applied only to clamp the load.

### Warranty

Parker Hannifin will warrant cylinders modified for water or high water content fluid service to be free of defects in materials or workmanship, but cannot accept responsibility to premature failure due to excessive wear due to lack of lubricity or where failure is caused by corrosion, electrolysis or mineral deposits within the cylinder.

### Seal Materials & Piston Seal Availability by Seal Class

| Seal Code (Class) | Description | Gland Codes A, H & K | | | Piston Wear Rings | Piston Seal Material & Availability by Type | | | | Piston Seal Energizer[1] | Piston Joint O-Ring | Body End Seals | Seal Back-Up Washer (If required) |
|---|---|---|---|---|---|---|---|---|---|---|---|---|---|
| | | Rod Wiper-seal | Rod Seal | Gland O-Ring | | HP Urethane | KP Filled PTFE | RP Thermo-plastic | WP Filled PTFE | | | | |
| 1 | Standard Seals | Urethane | Urethane | Urethane | WearGard™ | Yes | Yes | Yes | Yes | Nitrile | Urethane | Urethane | PTFE |
| 2 | Water Base Fluid Seals | Nitrile | Nitrile | Nitlrile | Polyester Resin/Fabric | No | Yes | Yes | Yes | Nitrile | Nitrile | Nitrile | PTFE |
| 3 | EPR Seals | EPR | EPR | EPR | WearGard™ | No | Yes | Yes | Yes | EPR | EPR | EPR | PTFE |
| 4 | Low Temp. Nitrile Seals | Nitrile | Nitrile | Nitrile | WearGard™ | Yes | Yes | Yes | No | Nitrile | Nitrile | Nitrile | PTFE |
| 5 | Fluorocarbon Seals | FKM | FKM | FKM | WearGard™ | No | Yes | Yes | Yes | FKM | FKM | FKM | PTFE |
| 6 | HWCF Seals | Nitrile | Nitrile | Nitrile | Polyester Resin/Fabric | No | Yes | Yes | Yes | Nitrile | Nitrile | Nitrile | PTFE |
| 8 | High Temp. Seals | Filled PTFE | Filled PTFE | FKM | HT Resin/ Aramid | No | Yes | No | No | FKM | FKM | FKM | PTFE |
| E | Fluorocarbon Gland Seals | FKM | FKM | FKM | WearGard™ | Yes | Yes | Yes | Yes | FKM | FKM | FKM | PTFE |
| N | High Temp. Gland Seals | Filled PTFE | Filled PTFE | FKM | HT Resin/ Aramid | Yes | Yes | Yes | Yes | FKM | FKM | FKM | PTFE |

[1] Includes material of redundant quad ring seal for Parker WP Mixed Media Seal

View Table of Contents

## Fluids and Temperature Range

| Class No. | Typical Fluids | Temperature Range |
|---|---|---|
| 1 (Standard)<br>(Nitrile Polyurethane) | Air, Nitrogen<br>Hydraulic Oil, Mil-H-5606 Oil | -10°F (-23°C) to<br>+165°F (+74°C) |
| 2 Optional<br>Water Base Fluid Seal | Water, Water-Glycol, HWCF — See Class 6 below. Water-in-Oil Emulsion Houghto-Safe, 271, 620, 5040. Mobil Pyrogard D, Shell Irus 905. Ucon Hydrolube J-4 | -10°F (-23°C) to<br>+165°F (+74°C) |
| 3 Special (EPR) (at extra cost)<br>Note: (EPR) seals are not compatible with Hydraulic Oil | Some Phosphate Ester Fluids<br>Skydrol 500, 7000 | -10°F (-23°C) to<br>+130°F (+54°C) |
| 4 Special (Nitrile) (at extra cost) | Low Temperature Air or Hydraulic Oil | -50°F (-46°C) to +150°F (+66°C) |
| 5 Optional (at extra cost)<br>(Fluorocarbon Seals)<br>Note: Fluorocarbon seals are not suitable for use with Skydrol fluid, but can be used with hydraulic oil if desired. | High Temperature<br>Houghto-Safe 1010, 1055, 1120<br>Fyrquel 150, 220, 300, 550<br>Mobil Pyrogard 42,43,53,55 | See paragraph on Fluorocarbon seals for recommended temperature range. |
| 6 Optional (HWCF) (at extra cost) | Houghton, Hydrolubric 120B<br>Sonsol Lubrizol, for other HWCF — consult factory. | +40°F (+4°C) to<br>+120°F (+49°C) |
| 8 Optional (at extra cost)<br>Energized PTFE | See Class 5 Seals | -15°F (-26°C) to<br>+400°F (+204°C) |

### Application Data

The proper application of a fluid power cylinder requires consideration of the operating pressure, the fluid medium, the mounting style, the length of stroke, the type of piston rod connection to the load, thrust or tension loading on the rod, mounting attitude, the speed of stroke, and how the load in motion will be stopped. Information given here provides pressure rating data for hydraulic cylinders.

### Pressure Ratings

Standard operating fluid — clean, filtered hydraulic oil. Pressure ratings for heavy-duty hydraulic cylinders are shown in the table.

Series 2H/2HD/2HB and 3H/3HD/3HB hydraulic cylinders are recommended for pressures to 3000 psi for heavy-duty service with hydraulic oil. The 4:1 design factor ratings shown are based on tensile strength of material and are for standard rod diameter only. The rating is conservative for continuous severe applications. Design factors at other pressures can be calculated from this rating. In addition, mounting styles, stroke, etc., should be considered because of the limiting effect they may have on these ratings.

**Series 2H/2HD/2HB & 3H/3HD/3HB Hydraulic Cylinders Maximum Pressure Ratings**

| Bore Ø | Rod Ø | 4:1[1] Design Factor (Tensile) (psi) | Heavy-Duty Service (psi) |
|---|---|---|---|
| 1.50 | 0.625 | 2530 | 3000 |
| 2.00 | 1.000 | 2950 | 3000 |
| 2.50 | 1.000 | 2340 | 3000 |
| 3.25 | 1.375 | 2250 | 3000 |
| 4.00 | 1.750 | 2130 | 3000 |
| 5.00 | 2.000 | 2170 | 3000 |
| 6.00 | 2.500 | 2270 | 3000 |
| 7.00 | 3.000 | 2030 | 3000 |
| 8.00 | 3.500 | 2040 | 3000 |
| 10.00 | 4.500 | 2720 | 3000 |
| 12.00 | 5.500 | 2580 | 3000 |
| 14.00 | 7.000 | 2320 | 3000 |
| 16.00 | 8.000 | 2750 | 3000 |
| 18.00 | 9.000 | 2900 | 3000 |
| 20.00 | 10.000 | 2640 | 3000 |

[1] Applies to all mountings except Styles J, JB and H.

View Table of Contents

## Piston Friction

Parker's new universal piston design provides not only superior sealing and wear performance, but also conserves operating energy with reduced running friction when compared to traditional sealing technologies. Running friction test results for the most popular seal configurations, HP Polyurethane Piston Seal and KP filled PTFE Piston Seal in 2.00", 4.00", 6.00" and 8.00" bores are shown in graphs below. Friction for intermediate bore sizes can be estimated using curves for bore sizes tested.

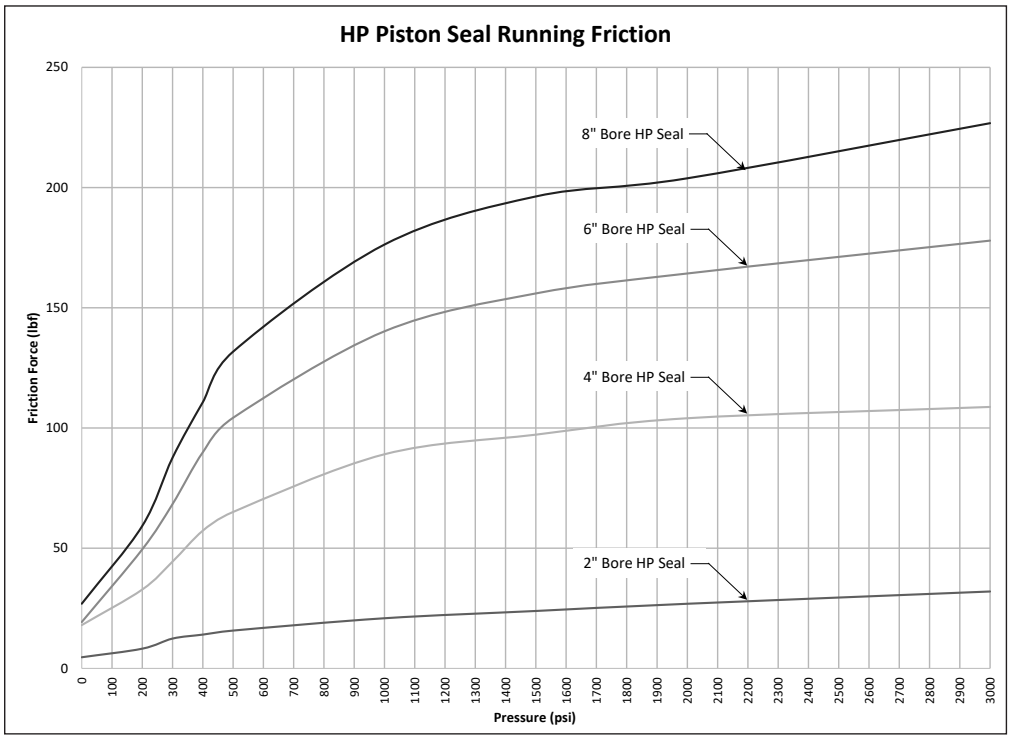


**Parker HP Polyurethane Piston Seal**

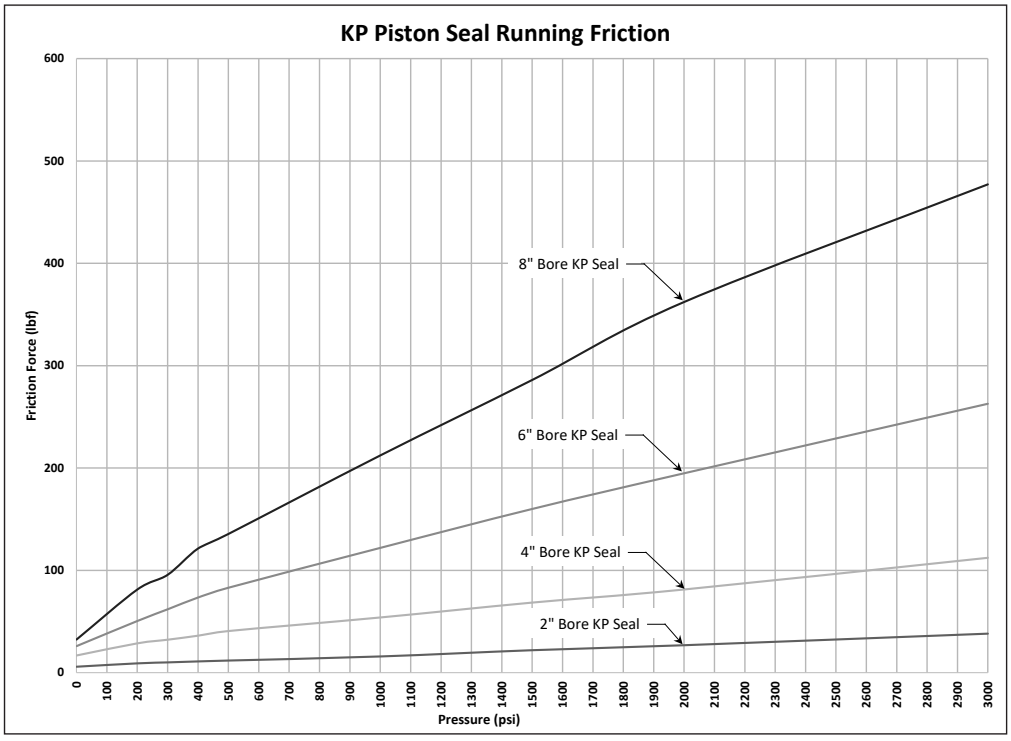


**Parker KP Filled PTFE Piston Seal**

View Table of Contents

## Gland Friction

Gland friction is also a factor in cylinder operating efficiency and combined with piston seal friction will yield an overall cylinder running friction value. Running friction test results for 2H (TS2000) and 2HD / 2HB (Tri-Lip) lipseal glands and Low Friction glands in 1.000", 1.750", 2.500" and 5.000" piston rod diameters are shown in the graphs below. Friction for intermediate rod diameters can be estimated using curves for bore sizes tested.

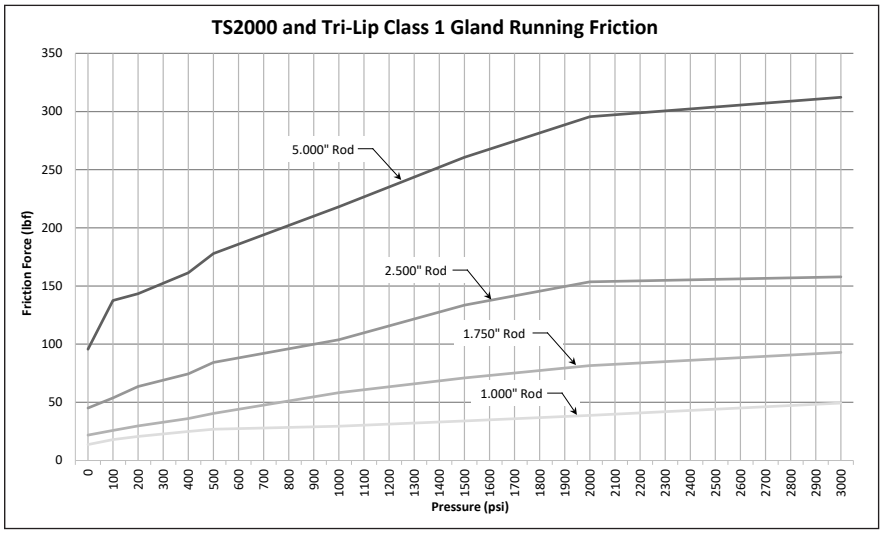


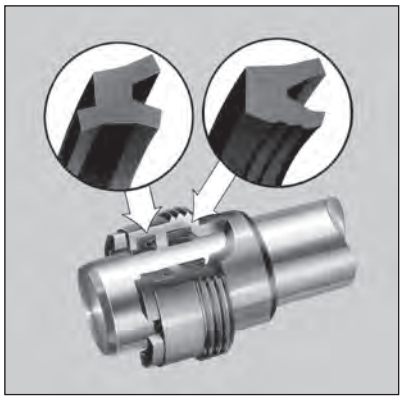

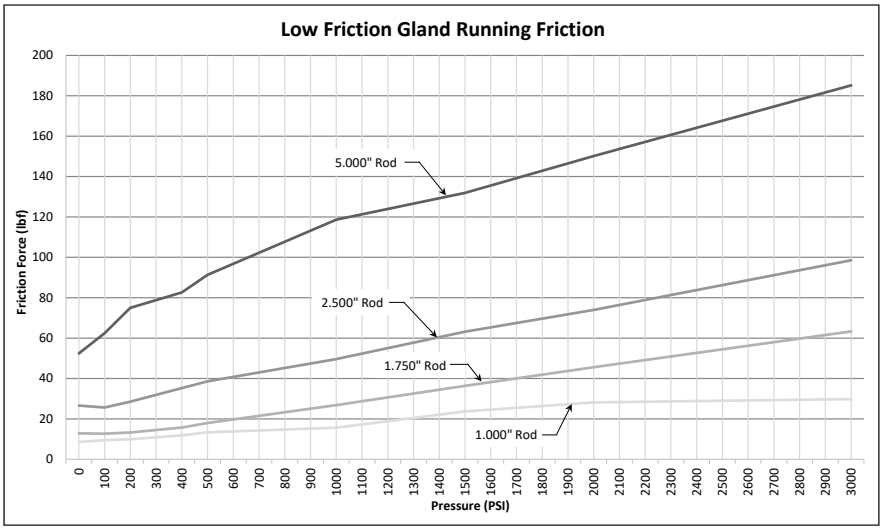


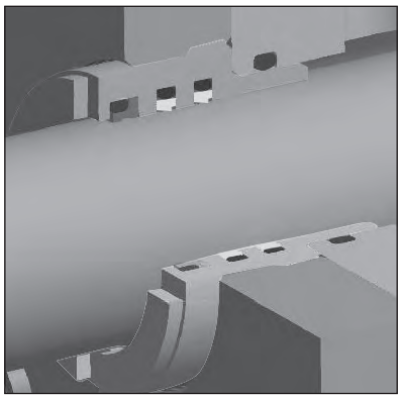

## Piston Orifice

Parker's RP Thermoplastic piston seal is fully extrusion resistant and the choice for applications formerly served by cast iron rings. For some applications, cast iron rings are selected because of the inherent piston bypass. Where bypass is required for the RP seal (or any other universal piston seal style), a piston orifice option is available. There are three orifice diameters to choose from, 0.016", 0.024" and 0.032". Flow charts at right detail the bypass flow at various pressures for each orifice. Specify the orifice by placing an 'S' in the Special field of the model number and describe the orifice as in the following example: S = 0.024" Piston Orifice (insert desired orifice dia). Piston orifice not available in bores 1.50", 2.00" and 2.50" with rod codes 2 & 3.

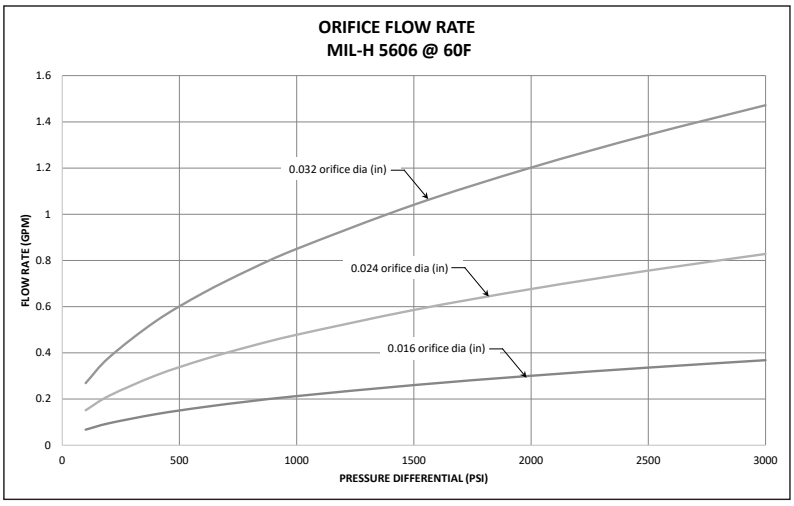

View Table of Contents

## Ports

Series 2H/2HD/2HB and 3H/3HD/3HB cylinders can be supplied with SAE straight O-ring ports or NPTF pipe thread ports. If specified on your order, extra ports can be provided on the sides of heads or caps that are not occupied by mountings or cushion valve.

Standard port location is position 1 as shown on line drawings in product catalog and Figure 1 below. Cushion adjustment needle and check valves are at positions 2 and 4 (or 3), depending on mounting style. Heads or caps which do not have an integral mounting can be rotated and assembled with ports at 90° or 180° from standard position. Mounting styles on which head or cap can be rotated at no extra charge are shown in Table A below. To order, specify by position number. In such assemblies the cushion adjustment needle and check valve rotate accordingly since their relationship with port position does not change.

### Figure 1

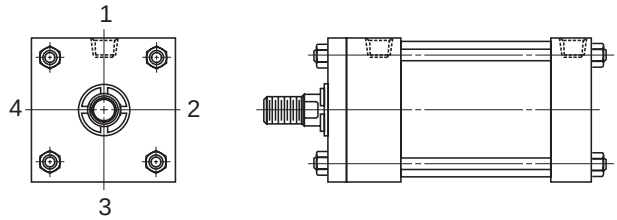


**Head (Rod) End** **Head** **Cap**

### Table A

| Mounting Style | Port Position Available | |
|---|---|---|
| | Head End | Cap End |
| TB, TC, TD, J, H, JB, HB, DD, DE | 1, 2, 3 or 4 | 1, 2, 3 or 4 |
| HH, DB, BB, SB, SE | 1, 2, 3 or 4 | 1 or 3 |
| JJ, D | 1 or 3 | 1, 2, 3 or 4 |
| C, F | 1 | 1 |

Ports can be supplied at positions other than those shown in Table A at an extra charge. To order, specify port position as shown in Figure 1.

## Straight Thread Ports

The SAE straight thread O-ring port is recommended for hydraulic applications. Parker will furnish this port configuration at positions shown in Table A. This port can also be provided at positions other than those shown in Table A at an extra charge. SAE port size numbers are listed next to the NPTF pipe thread counterparts for each bore size in the respective product catalogs. Size number, tube O.D., and port thread size for SAE ports are listed in Table B.

### Table B — SAE Straight Thread O-Ring Ports

| Size No. | Tube O.D. (In.) | Thread Size | Size No. | Tube O.D. (In.) | Thread Size |
|---|---|---|---|---|---|
| 2 | 0.13 | 5/16 - 24 | 12 | 0.75 | 1 1/16 - 12 |
| 3 | 0.19 | 3/8 - 24 | — | — | — |
| 4 | 0.25 | 7/16 - 20 | 16 | 1.00 | 1 5/16 - 12 |
| 5 | 0.31 | 1/2 - 20 | 20 | 1.25 | 1 5/8 - 12 |
| 6 | 0.38 | 9/16 - 18 | 24 | 1.50 | 1 7/8 - 12 |
| 8 | 0.50 | 3/4 - 16 | 32 | 2.00 | 2 1/2 - 12 |
| 10 | 0.63 | 7/8 - 14 | — | — | — |

**Note:** For the pressure ratings of individual connectors, contact your connector supplier. Hydraulic cylinders applied with meter out or deceleration circuits are subject to intensified pressure at the cylinder piston rod end. The rod end pressure is approximately equal to:

$$\frac{\text{Effective Cap End Piston Area}}{\text{Effective Rod End Piston Area}} \times \text{Operating Pressure}$$

## International Ports

Other port configurations to meet international requirements are available at extra cost. Parker Series 2H/2HD/2HB and 3H/3HD/3HB cylinders can be supplied, on request, with British standard taper port (BSPT). Such port has a taper of 1 in 16 measured on the diameter ($^1/_{16}$" per inch). The thread form is Whitworth System, and size and number of threads per inch are as follows:

### Table C — British Standard Pipe Threads

| Nominal Pipe Size | No. Threads Per Inch | Pipe O.D. |
|---|---|---|
| 1/8 | 28 | 0.383 |
| 1/4 | 19 | 0.518 |
| 3/8 | 19 | 0.656 |
| 1/2 | 14 | 0.825 |
| 3/4 | 14 | 1.041 |
| 1 | 11 | 1.309 |
| 1 1/4 | 11 | 1.650 |
| 1 1/2 | 11 | 1.882 |
| 2 | 11 | 2.347 |

British standard parallel internal threads are designated as BSPP and have the same thread form and number of threads per inch as the BSPT type and can be supplied, on request, at extra cost. Unless otherwise specified, the BSPP or BSPT port size supplied will be the same nominal pipe size as the NPTF port for a given bore size cylinder.

Metric ports can also be supplied to order at extra cost. See table below for standard port size for each bore.

### Table D – Standard Port Sizes

| Bore Ø | T SAE | U NPTF | P SAE Code 61 Flange | Y ISO 6149 | B BSPT R BSPP | G Metric |
|---|---|---|---|---|---|---|
| 1.50 | 10 | 1/2 | N/A | M22 x 1.5 | 1/2 | M22 x 1.5 |
| 2.00 | 10 | 1/2 | N/A | M22 x 1.5 | 1/2 | M22 x 1.5 |
| 2.50 | 10 | 1/2 | 1/2[1] | M22 x 1.5 | 1/2 | M22 x 1.5 |
| 3.25 | 12 | 3/4 | 3/4 | M27 x 2 | 3/4 | M27 x 2 |
| 4.00 | 12 | 3/4 | 3/4 | M27 x 2 | 3/4 | M27 x 2 |
| 5.00 | 12 | 3/4 | 3/4 | M27 x 2 | 3/4 | M27 x 2 |
| 6.00 | 16 | 1 | 1 | M33 x 2 | 1 | M33 x 2 |
| 7.00 | 20 | 1 1/4 | 1 1/4 | M42 x 2 | 1 1/4 | M42 x 2 |
| 8.00 | 24 | 1 1/2 | 1 1/2 | M48 x 2 | 1 1/2 | M48 x 2 |
| 10.00 | 24 | 2 | 2 | M48 x 2 | 2 | M48 x 2 |
| 12.00 | 24 | 2 1/2 | 2 1/2 | M48 x 2 | 2 1/2 | M48 x 2 |
| 14.00 | 24 | 2 1/2 | 2 1/2 | M48 x 2 | 2 1/2 | M48 x 2 |
| 16.00-20.00 | 24 | – | 3 | – | – | – |

[1]Available with 1.000 inch rod diameter only.

View Table of Contents

## Oversize Ports

Oversize NPTF or SAE straight thread ports can be provided, at an extra charge. For ports one size larger than standard, welded port bosses which protrude from the side of the head or cap are supplied. For dimensions, see drawings and tables below. Series 2H/2HD/2HB and 3H/3HD/3HB cylinders equipped with cushions at the cylinder cap end can sustain damage to the cushion check valve (cushion bushing) if excessive oil flow enters the cylinder from the cap end port. Cylinders which are equipped with cap end cushions and ordered with one size oversize ports having hydraulic fluid velocity exceeding 25 ft./sec. in the line entering the cap end of the cylinder should be ordered with a “solid cushion” at cap end. All cylinders ordered with double oversize ports should always be ordered with a “solid cushion” at cap end.

Cylinders which are connected to a meter out flow control with flow entering the cap end of a cylinder provided by an accumulator may also experience damage to the cushion bushing due to high instantaneous fluid flows. This condition can be eliminated by using a meter in flow control or “solid cushions” at cap end.

### Oversize NPTF Port Boss Dimensions

| Bore Ø | EE (NPTF) | A Ø | B | C | D | P |
|---|---|---|---|---|---|---|
| 1.50 | 3/4 | 1.38 | 1.00 | 0.75 | 0.78 | 2.91 |
| 2.00 | 3/4 | 1.38 | 1.00 | 0.75 | 0.78 | 2.91 |
| 2.50 | 3/4 | 1.38 | 1.00 | 0.75 | 0.78 | 3.03 |
| 3.25 | 1 | 1.75 | 1.19 | 0.91 | 0.88 | 3.53 |
| 4.00 | 1 | 1.75 | 1.19 | 0.91 | 0.88 | 3.78 |
| 5.00 | 1 | 1.75 | 1.19 | 0.91 | 0.88 | 4.28 |
| 6.00 | 1 1/4 | 2.25 | 1.31 | 1.13 | 1.13 | 5.13 |
| 7.00 | 1 1/2 | 2.50 | 1.56 | 1.38 | 1.38 | 5.75 |
| 8.00 | 2 | 3.00 | 1.69 | 1.50 | 1.50 | 6.50 |

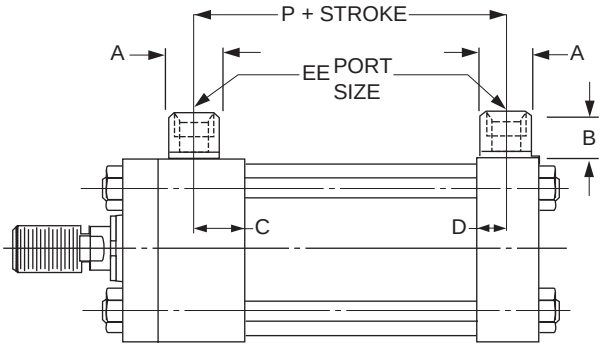


### Oversize SAE Straight Thread Port Boss Dimensions

| Bore Ø | EE (SAE) | | A Ø | B | C | D | P |
|---|---|---|---|---|---|---|---|
| | 2H | 2HD | | | | | |
| 1.50 | 12[1] | 12 | 1.38 | 1.00 | 0.81 | 0.78 | 2.97 |
| 2.00 | 12[1] | 12 | 1.38 | 1.00 | 0.81 | 0.78 | 2.97 |
| 2.50 | 12[2] | 12[3] | 1.38 | 1.00 | 0.81 | 0.81 | 3.13 |
| 3.25 | 16 | 16 | 1.75 | 1.19 | 0.91 | 0.91 | 3.56 |
| 4.00 | 16 | 16 | 1.75 | 1.19 | 0.91 | 0.91 | 3.81 |
| 5.00 | 16 | 16 | 1.75 | 1.19 | 0.91 | 0.91 | 4.31 |
| 6.00 | 20[2] | 20[2] | – | – | 1.13 | 1.17 | 5.19 |
| 7.00 | 24[2] | 24[2] | – | – | – | – | 5.63 |
| 8.00 | N/A | N/A | – | – | – | – | 6.38 |

[1] Port tapped directly in head with code 1 rod these bores.
[2] Port tapped directly in head (all rod codes) and cap these bores.
[3] Port tapped directly in cap this bore.

### Flange Ports (Code 61, 3000 psi) SAE 4 Bolt Flange Ports

| Bore Ø | Rod No. | SAE Dash No. | A Ø | AA | GG | P | Q | W | X | Y | Z |
|---|---|---|---|---|---|---|---|---|---|---|---|
| 2.50[4,5] | 1 | 8 | .50 | .81 | .69 | 2.97 | 1.50 | .75 | .34 | 2.38 | 5/16 - 18 |
| 3.25[4] | 1 | 12 | .75 | .75 | .87 | 3.47 | 1.87 | .94 | .44 | 2.75 | 3/8 - 16 |
| | 2 | | | | | | | | | 3.13 | |
| | 3 | | | | | | | | | 3.00 | |
| 4.00[4] | 1 | 12 | .75 | .75 | .87 | 3.72 | 1.87 | .94 | .44 | 3.00 | 3/8 - 16 |
| | 2 | | | | | | | | | 3.38 | |
| | 3 | | | | | | | | | 3.13 | |
| 5.00[4] | 1 | 12 | .75 | .75 | .87 | 4.22 | 1.87 | .94 | .44 | 3.13 | 3/8 - 16 |
| | 2 | | | | | | | | | 3.38 | |
| | 3 | | | | | | | | | 3.38 | |
| | 4 | | | | | | | | | 3.38 | |
| 6.00 | All | 16 | 1.00 | .87 | 1.03 | 4.85 | 2.06 | 1.03 | .52 | 3,50 | 3/8 - 16 |
| 7.00 | All | 20 | 1.25 | 1.00 | 1.19 | 5.47 | 2.31 | 1.16 | .59 | 3.75 | 7/16 - 14 |
| 8.00 | All | 24 | 1.50 | 1.06 | 1.41 | 6.19 | 2.75 | 1.37 | .70 | 3.88 | 1/2 - 13 |

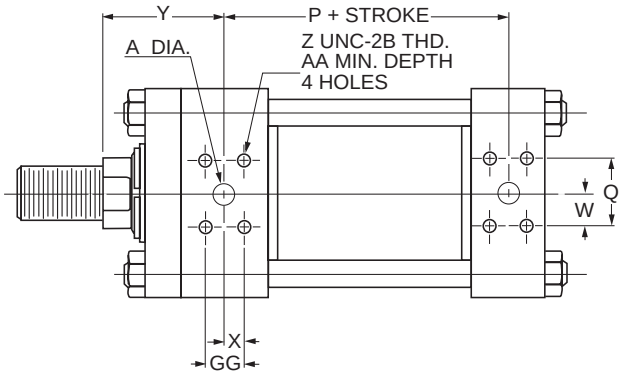


[4] 2.50", 3.25", 4.00" & 5.00" bores cap-flange port not available on Style HB Style H not available at position 2 or 4. Port flange overhangs cap on Style HH.
[5] 2.50" bore head flange port available with 1.000" rod only.

View Table of Contents

## Stroke Data

Parker cylinders are available in any practical stroke length. The following information should prove helpful to you in selecting the proper stroke for your cylinder application.

## Stroke Tolerances

Stroke length tolerances are required due to buildup of tolerances of piston, head, cap and cylinder tube. Standard production of stroke tolerances run +.031" to -.015" up to 20" stroke, +.031" to -.020" for 21" to 60" and +.031" to -.031" for greater than 60" stroke. For closer tolerances on stroke length, it is necessary to specify the required tolerance plus the pressure and temperature at which the cylinder will operate. Stroke tolerances smaller than .015" are not generally practical due to elasticity of cylinders. If machine design requires such close tolerances, use of a stroke adjuster may achieve the desire result.

## Mounting Groups

Standard mountings for fluid power cylinders fall into three basic groups. The groups can be summarized as follows:

**Group 1** Straight Line Force Transfer with fixed mounts which absorb force on cylinder centerline.

**Group 2** Pivot Force Transfer. Pivot mountings permit a cylinder to change its alignment in one plane.

**Group 3** Straight Line Force Transfer with fixed mounts which do not absorb force on cylinder centerline.

Because a cylinder's mounting directly affects the maximum pressure at which the cylinder can be used, the chart below should be helpful in selection of the proper mounting combination for your application. Stroke length, piston rod connection to load, extra piston rod length over standard, etc., should be considered for thrust loads. Alloy steel mounting bolts are recommended for all mounting styles, and thrust keys are recommended for Styles C and F.

## Double Rod End Cylinders

The piston connection to rod #1 (without 'V' notch) of 1.50"-8.00" bore double rod end heavy duty hydraulic cylinders is pre-stressed for maximum fatigue life. For this reason the load should always be attached to the rod without 'V' notch. Extension rod #2 with 'V' notch is threaded to rod #1 and is recommended for non-load bearing attachment only.

For thrust (compression) load applications where the mounting style end of a double rod end cylinder is opposite the rod connected to the load it should be specified as a cap mounting style. For example, a head trunnion mounting style opposite the rod connected to the load should be specified as DB. This will ensure that the rod end without 'V' notch will be oriented opposite the head trunnion end. See the table below for guidance in selecting mounting styles that fit this criteria.

| | |
|---|---|
| **Group 1** FIXED MOUNTS which absorb force on cylinder centerline. | |
| **Heavy-Duty Service**<br>For Thrust Loads<br>For Tension Loads | 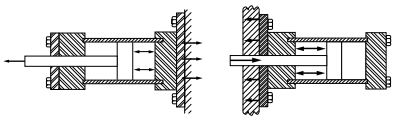 <br>Styles HB, HH, TC<br>Styles JB, JJ, TB |
| **Medium-Duty Service**<br>For Thrust Loads<br>For Tension Loads | Styles H, HB<br>Styles J, JB |
| **Light-Duty Service**<br>For Thrust Loads<br>For Tension Loads | Style H<br>Style J |
| **Group 2** PIVOT MOUNTS which absorb force on cylinder centerline. | |
| **Heavy-Duty Service**<br>For Thrust Loads<br>For Tension Loads | 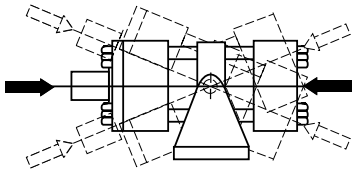 <br>Styles DD, D, DE, SE<br>Styles BB, DD, D, DB, DE, SE |
| **Medium-Duty Service**<br>For Thrust Loads<br>For Tension Loads | Styles BB, SB<br>Styles BB, SB |
| **Group 3** FIXED MOUNTS which do not absorb force on the centerline. | |
| **Heavy-Duty Service**<br>For Thrust Loads<br>For Tension Loads | 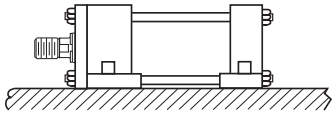 <br>Styles C, CP<br>Styles C, CP |
| **Medium-Duty Service**<br>For Thrust Loads<br>For Tension Loads | Styles F, FP<br>Styles F, FP |

## Double Rod End Mounting Styles

| Mounting Styles for Single Rod Models | Mounting Styles for Corresponding Double Rod Models with the Load Connected To Rod Opposite Cylinder Mounting End |
|---|---|
| TB | KTC |
| J | KH |
| JB | KHB |
| JJ | KHH |
| D | KDB |

## Double Rod Cylinder

Style K

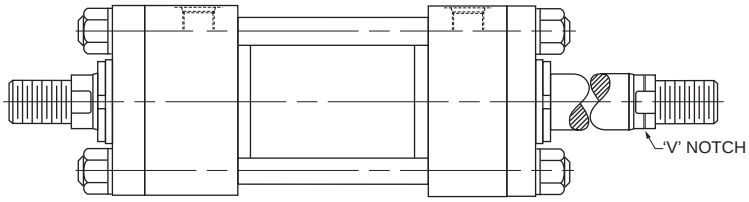


**Rod End #1** **Rod End #2**

View Table of Contents

# Stop Tubing

Stop tube is recommended to lengthen the distance between the rod bearing and piston bearing to reduce bearing loads on long push stroke cylinders when the cylinder is fully extended. This is especially true of horizontally mounted cylinders. As part of the piston assembly and positioned between the piston and head, a stop tube restricts the extended position of the rod using the increased distance to achieve additional stability.

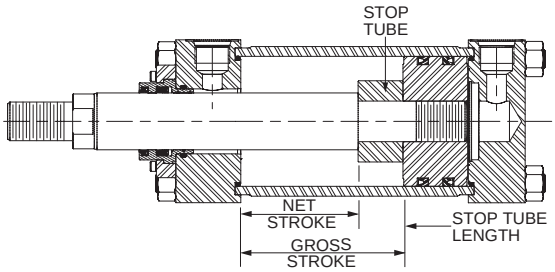


Use the following steps to determine the need for stop tube and, if required, how long it should be.

1. Examine the groups of cylinder illustrations below and determine which mounting and rod guiding group type match the required cylinder application.
2. Establish the Basic Length (L), with the piston rod fully extended, for the selected illustration by using the dimensional tables on previous pages of this catalog. For pivot mounted cylinders, the pin-to-pin dimension with the piston rod fully extended must be used. Regardless of mounting style, be sure to include any extended piston rod length beyond the catalog standard.
3. In the Stop Tube Table select the column for the appropriate mounting style and rod end guiding type. In the Basic Length (L) column, find the row with the range that includes the value calculated in Step 2. The next respective column to the right has the required length of stop tube.

**Note:** Mounting Styles BB, DB, H, HB, HH, SB and SE are mounted horizontally should also be checked for turning moments and loads between the rod bearing and piston to ensure they are not excessive. Weight of oil must be included in determining bearing loads.

When specifying cylinders with stop tube be sure to call out the net stroke and the length of the stop tube. Machine design can be continued without delay by laying in a cylinder equivalent in length to the NET STROKE PLUS STOP TUBE LENGTH, which is referred to as GROSS STROKE.

## Stop Tube Length vs Basic Length (L)

| Pivot Mounts (BB, D, DB, DD, DE, SB and SE) | | Fixed Mounts (C, F, H, HB, HH, J, JB, JJ, TB, TC, TD) | | | | | |
|---|---|---|---|---|---|---|---|
| Pivoted and Rigidly Guided Rod End | | Fixed & Rigidly Guided Rod End | | Pivoted & Rigidly Guided Rod End | | Unguided Rod End | |
| Basic Length (L) | Stop Tube Length | Basic Length (L) | Stop Tube Length | Basic Length (L) | Stop Tube Length | Basic Length (L) | Stop Tube Length |
| 0 - 40 | 0 | 0 - 80 | 0 | 0 - 57 | 0 | 0 - 20 | 0 |
| 41 - 50 | 1 | 81 - 100 | 1 | 58 - 71 | 1 | 21 - 25 | 1 |
| 51 - 60 | 2 | 101 - 120 | 2 | 72 - 86 | 2 | 26 - 30 | 2 |
| 61 - 70 | 3 | 121 - 140 | 3 | 87 - 100 | 3 | 31 - 35 | 3 |
| 71 - 80 | 4 | 141 - 160 | 4 | 101 - 114 | 4 | 36 - 40 | 4 |
| 81 - 90 | 5 | 161 - 180 | 5 | 115 - 129 | 5 | 41 - 45 | 5 |
| 91 - 100 | 6 | 181 - 200 | 6 | 130 - 143 | 6 | 46 - 50 | 6 |
| 101 - 110 | 7 | 201 - 220 | 7 | 144 - 157 | 7 | 51 - 55 | 7 |
| 111 - 120 | 8 | 221 - 240 | 8 | 158 - 171 | 8 | 56 - 60 | 8 |
| 121 - 130 | 9 | 241 - 260 | 9 | 172 - 186 | 9 | 61 - 65 | 9 |
| 131 - 140 | 10 | 261 - 280 | 10 | 187 - 200 | 10 | 66 - 70 | 10 |
| 141 - 150 | 11 | 281 - 300 | 11 | 201 - 214 | 11 | 71 - 75 | 11 |
| 151 - 160 | 12 | Consult Factory | | 215 - 229 | 12 | 76 - 80 | 12 |
| 161 - 170 | 13 | | | 230 - 243 | 13 | 81 - 85 | 13 |
| 171 - 180 | 14 | | | 244 - 257 | 14 | 86 - 90 | 14 |
| 181 - 190 | 15 | | | 258 - 271 | 15 | 91 - 95 | 15 |
| 191 - 200 | 16 | | | 272 - 286 | 16 | 96 - 100 | 16 |
| 201 - 210 | 17 | | | 287 - 300 | 17 | 101 - 105 | 17 |
| 211 - 220 | 18 | | | Consult Factory | | 106 - 110 | 18 |
| 221 - 230 | 19 | | | | | 111 - 115 | 19 |
| 231 - 240 | 20 | | | | | 116 - 120 | 20 |
| 241 - 250 | 21 | | | | | 121 - 125 | 21 |
| 251 - 260 | 22 | | | | | 126 - 130 | 22 |
| 261 - 270 | 23 | | | | | 131 - 135 | 23 |
| 271 - 280 | 24 | | | | | 136 - 140 | 24 |
| 281 - 290 | 25 | | | | | 141 - 145 | 25 |
| 291 - 300 | 26 | | | | | 146 - 150 | 26 |
| Consult Factory | | | | | | Consult Factory | |

## Cylinder Mounting and Rod Guiding Groups

Pivot Mount – Pivoted and rigidly guided rod end

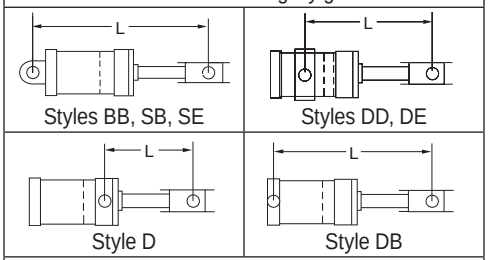


Fixed Mount – Fixed and rigidly guided rod end

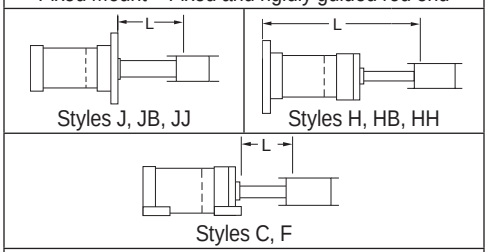


Fixed Mount – Pivoted and rigidly guided rod end

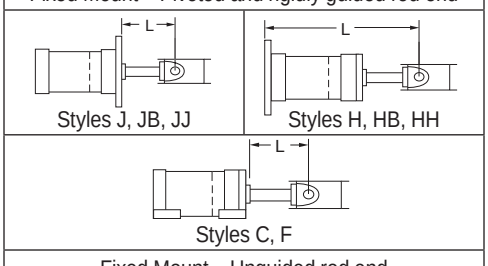


Fixed Mount – Unguided rod end

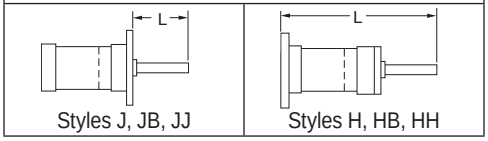

View Table of Contents

# Piston Rod Diameter Selection

Long stroke cylinders that work on push with the piston rod loaded in compression should be checked, using the following steps, to ensure an appropriate piston rod diameter is specified.

1. First, determine whether stop tubing is required as described on the previous page.
2. Use the Basic Length (L) that was established for determining the stop tube length and then add the required stop tube length to the Basic Length to obtain an Adjusted Basic Length ($L_A$).
3. In the table below, for the mounting style and rod end guiding condition that will be used, find the row for the Bore and Rod combination that is required.
4. Follow the Bore and Rod row to the right and find the Operating Pressure column that is closest, but exceeds the system pressure. The intersection of the Bore and Rod row and Operating Pressure column displays the maximum allowable $L_A$. If $L_A$ in the table is greater than or equal to the calculated $L_A$, the rod diameter selected is satisfactory for the application.
5. If $L_A$ in the table is less than the calculated Adjusted Basic Length move down the column to a rod diameter with an $L_A$ that exceeds the requirement.
6. If the $L_A$ specifies a rod diameter in a larger bore then restart the process of sizing the stop tube and re-check the rod diameter. Contact the factory if $L_A$ exceeds 300 inches.

**Note:** Data in these tables assume standard rod extension (W or WF dimension) and standard rod end accessories. If different, consult factory.

### Maximum Basic Lengths ($L_A$) (all dimensions in inches)

| Bore Ø | Rod Ø | Front and Side Fixed Mounts (J[1], JB[1], JJ, TB, TD, C, F) | | | | | | | | | | | | | | | | | |
|---|---|---|---|---|---|---|---|---|---|---|---|---|---|---|---|---|---|---|---|
| | | Fixed and Rigidly Guided Rod End Max. Allowable Basic Length ($L_A$) at psi: | | | | | | Pivoted and Rigidly Guided Rod End Max. Allowable Basic Length ($L_A$) at psi: | | | | | | Unguided Rod End Max. Allowable Basic Length ($L_A$) at psi: | | | | | |
| | | 500 | 1000 | 1500 | 2000 | 2500 | 3000 | 500 | 1000 | 1500 | 2000 | 2500 | 3000 | 500 | 1000 | 1500 | 2000 | 2500 | 3000 |
| 1.50 | 0.625 | 50 | 35 | 29 | 25 | 22 | 20 | 36 | 25 | 21 | 18 | 16 | 15 | 13 | 9 | 7 | 6 | 6 | 5 |
| | 1.000 | 128 | 91 | 74 | 64 | 57 | 52 | 92 | 65 | 53 | 46 | 41 | 37 | 32 | 23 | 19 | 16 | 14 | 13 |
| 2.00 | 1.000 | 96 | 68 | 56 | 48 | 43 | 39 | 69 | 49 | 40 | 34 | 31 | 28 | 24 | 17 | 14 | 12 | 11 | 10 |
| | 1.375 | 182 | 129 | 105 | 91 | 81 | 74 | 130 | 92 | 75 | 65 | 58 | 53 | 45 | 32 | 26 | 23 | 20 | 19 |
| 2.50 | 1.000 | 77 | 54 | 44 | 38 | 34 | 31 | 55 | 39 | 32 | 27 | 25 | 22 | 19 | 14 | 11 | 10 | 9 | 8 |
| | 1.375 | 146 | 103 | 84 | 73 | 65 | 59 | 104 | 73 | 60 | 52 | 46 | 42 | 36 | 26 | 21 | 18 | 16 | 15 |
| | 1.750 | 236 | 167 | 136 | 118 | 105 | 96 | 168 | 119 | 97 | 84 | 75 | 69 | 59 | 42 | 34 | 29 | 26 | 24 |
| 3.25 | 1.375 | 112 | 79 | 65 | 56 | 50 | 46 | 80 | 57 | 46 | 40 | 36 | 33 | 28 | 20 | 16 | 14 | 13 | 11 |
| | 1.750 | 181 | 128 | 105 | 91 | 81 | 74 | 130 | 92 | 75 | 65 | 58 | 53 | 45 | 32 | 26 | 23 | 20 | 19 |
| | 2.000 | 237 | 167 | 137 | 118 | 106 | 97 | 169 | 120 | 98 | 85 | 76 | 69 | 59 | 42 | 34 | 30 | 26 | 24 |
| 4.00 | 1.750 | 147 | 104 | 85 | 74 | 66 | 60 | 105 | 74 | 61 | 53 | 47 | 43 | 37 | 26 | 21 | 18 | 16 | 15 |
| | 2.000 | 192 | 136 | 111 | 96 | 86 | 79 | 137 | 97 | 79 | 69 | 61 | 56 | 48 | 34 | 28 | 24 | 22 | 20 |
| | 2.500 | 300 | 213 | 174 | 150 | 134 | 123 | 215 | 152 | 124 | 107 | 96 | 88 | 75 | 53 | 43 | 38 | 34 | 31 |
| 5.00 | 2.000 | 154 | 109 | 89 | 77 | 69 | 63 | 110 | 78 | 63 | 55 | 49 | 45 | 38 | 27 | 22 | 19 | 17 | 16 |
| | 2.500 | 241 | 170 | 139 | 120 | 108 | 98 | 172 | 121 | 99 | 86 | 77 | 70 | 60 | 43 | 35 | 30 | 27 | 25 |
| | 3.000 | 300 | 245 | 200 | 173 | 155 | 141 | 247 | 175 | 143 | 124 | 111 | 101 | 87 | 61 | 50 | 43 | 39 | 35 |
| | 3.500 | 300 | 300 | 272 | 236 | 211 | 192 | 300 | 238 | 194 | 168 | 151 | 137 | 118 | 83 | 68 | 59 | 53 | 48 |
| 6.00 | 2.500 | 200 | 142 | 116 | 100 | 90 | 82 | 143 | 101 | 83 | 72 | 64 | 58 | 50 | 35 | 29 | 25 | 22 | 20 |
| | 3.000 | 289 | 204 | 167 | 144 | 129 | 118 | 206 | 146 | 119 | 103 | 92 | 84 | 72 | 51 | 42 | 36 | 32 | 29 |
| | 3.500 | 300 | 278 | 227 | 196 | 176 | 160 | 281 | 198 | 162 | 140 | 125 | 115 | 98 | 69 | 57 | 49 | 44 | 40 |
| | 4.000 | 300 | 300 | 296 | 257 | 229 | 209 | 300 | 259 | 212 | 183 | 164 | 150 | 128 | 91 | 74 | 64 | 57 | 52 |
| 7.00 | 3.000 | 247 | 175 | 143 | 124 | 111 | 101 | 177 | 125 | 102 | 88 | 79 | 72 | 62 | 44 | 36 | 31 | 28 | 25 |
| | 3.500 | 300 | 238 | 194 | 168 | 151 | 137 | 241 | 170 | 139 | 120 | 108 | 98 | 84 | 60 | 49 | 42 | 38 | 34 |
| | 4.000 | 300 | 300 | 254 | 220 | 197 | 180 | 300 | 222 | 181 | 157 | 140 | 128 | 110 | 78 | 63 | 55 | 49 | 45 |
| | 4.500 | 300 | 300 | 300 | 278 | 249 | 227 | 300 | 281 | 230 | 199 | 178 | 162 | 139 | 98 | 80 | 70 | 62 | 57 |
| | 5.000 | 300 | 300 | 300 | 300 | 300 | 281 | 300 | 300 | 283 | 245 | 220 | 200 | 172 | 121 | 99 | 86 | 77 | 70 |
| 8.00 | 3.500 | 295 | 208 | 170 | 147 | 132 | 120 | 210 | 149 | 122 | 105 | 94 | 86 | 74 | 52 | 43 | 37 | 33 | 30 |
| | 4.000 | 300 | 272 | 222 | 192 | 172 | 157 | 275 | 194 | 159 | 137 | 123 | 112 | 96 | 68 | 56 | 48 | 43 | 39 |
| | 4.500 | 300 | 300 | 281 | 244 | 218 | 199 | 300 | 246 | 201 | 174 | 156 | 142 | 122 | 86 | 70 | 61 | 54 | 50 |
| | 5.000 | 300 | 300 | 300 | 300 | 269 | 245 | 300 | 300 | 248 | 215 | 192 | 175 | 150 | 106 | 87 | 75 | 67 | 61 |
| | 5.500 | 300 | 300 | 300 | 300 | 300 | 297 | 300 | 300 | 300 | 260 | 232 | 212 | 182 | 129 | 105 | 91 | 81 | 74 |
| 10.00 | 4.500 | 300 | 276 | 225 | 195 | 174 | 159 | 278 | 197 | 161 | 139 | 124 | 114 | 97 | 69 | 56 | 49 | 44 | 40 |
| | 5.000 | 300 | 300 | 278 | 241 | 215 | 196 | 300 | 243 | 198 | 172 | 154 | 140 | 120 | 85 | 69 | 60 | 54 | 49 |
| | 5.500 | 300 | 300 | 300 | 291 | 260 | 238 | 300 | 294 | 240 | 208 | 186 | 170 | 146 | 103 | 84 | 73 | 65 | 59 |
| | 7.000 | 300 | 300 | 300 | 300 | 300 | 300 | 300 | 300 | 300 | 300 | 300 | 275 | 236 | 167 | 136 | 118 | 105 | 96 |
| 12.00 | 5.500 | 300 | 300 | 280 | 243 | 217 | 198 | 300 | 245 | 200 | 173 | 155 | 141 | 121 | 86 | 70 | 61 | 54 | 50 |
| | 7.000 | 300 | 300 | 300 | 300 | 300 | 300 | 300 | 300 | 300 | 281 | 251 | 229 | 196 | 139 | 113 | 98 | 88 | 80 |
| | 8.000 | 300 | 300 | 300 | 300 | 300 | 300 | 300 | 300 | 300 | 300 | 300 | 299 | 257 | 181 | 148 | 128 | 115 | 105 |
| 14.00 | 7.000 | 300 | 300 | 300 | 300 | 300 | 275 | 300 | 300 | 278 | 241 | 215 | 196 | 168 | 119 | 97 | 84 | 75 | 69 |
| | 8.000 | 300 | 300 | 300 | 300 | 300 | 300 | 300 | 300 | 300 | 300 | 281 | 256 | 220 | 155 | 127 | 110 | 98 | 90 |
| | 10.000 | 300 | 300 | 300 | 300 | 300 | 300 | 300 | 300 | 300 | 300 | 300 | 300 | 300 | 243 | 198 | 172 | 154 | 140 |
| 16.00 | 8.000 | 300 | 300 | 300 | 300 | 300 | 300 | 300 | 300 | 300 | 275 | 246 | 224 | 192 | 136 | 111 | 96 | 86 | 79 |
| | 9.000 | 300 | 300 | 300 | 300 | 300 | 300 | 300 | 300 | 300 | 300 | 300 | 284 | 244 | 172 | 141 | 122 | 109 | 99 |
| | 10.000 | 300 | 300 | 300 | 300 | 300 | 300 | 300 | 300 | 300 | 300 | 300 | 300 | 300 | 213 | 174 | 150 | 134 | 123 |
| 18.00 | 9.000 | 300 | 300 | 300 | 300 | 300 | 300 | 300 | 300 | 300 | 300 | 277 | 252 | 216 | 153 | 125 | 108 | 97 | 88 |
| | 10.000 | 300 | 300 | 300 | 300 | 300 | 300 | 300 | 300 | 300 | 300 | 300 | 300 | 267 | 189 | 154 | 134 | 120 | 109 |
| 20.00 | 10.000 | 300 | 300 | 300 | 300 | 300 | 300 | 300 | 300 | 300 | 300 | 300 | 281 | 241 | 170 | 139 | 120 | 108 | 98 |

[1] Maximum operating pressure is limited for Mounting Styles J and JB. Please refer to maximum operating pressure per bore in Pressure Ratings table located on the dimension page for each of these mounting styles.

View Table of Contents

## Maximum Basic Lengths ($L_A$) (all dimensions in inches)

| Bore Ø | Rod Ø | Rear Fixed Mounts (H[1], HB[1], HH, TC) | | | | | | | | | | | | | | | | | |
|---|---|---|---|---|---|---|---|---|---|---|---|---|---|---|---|---|---|---|---|
| | | Fixed and Rigidly Guided Rod End Max. Allowable Basic Length ($L_A$) at psi: | | | | | | Pivoted and Rigidly Guided Rod End Max. Allowable Basic Length ($L_A$) at psi: | | | | | | Unguided Rod End Max. Allowable Basic Length ($L_A$) at psi: | | | | | |
| | | 500 | 1000 | 1500 | 2000 | 2500 | 3000 | 500 | 1000 | 1500 | 2000 | 2500 | 3000 | 500 | 1000 | 1500 | 2000 | 2500 | 3000 |
| 1.50 | 0.625 | 70 | 50 | 40 | 35 | 31 | 29 | 50 | 35 | 29 | 25 | 22 | 20 | 18 | 12 | 10 | 9 | 8 | 7 |
| | 1.000 | 170 | 120 | 98 | 85 | 76 | 69 | 121 | 86 | 70 | 61 | 54 | 50 | 42 | 30 | 25 | 21 | 19 | 17 |
| 2.00 | 1.000 | 132 | 93 | 76 | 66 | 59 | 54 | 94 | 67 | 54 | 47 | 42 | 38 | 33 | 23 | 19 | 16 | 15 | 13 |
| | 1.375 | 232 | 164 | 134 | 116 | 104 | 95 | 166 | 117 | 96 | 83 | 74 | 68 | 58 | 41 | 33 | 29 | 26 | 24 |
| 2.50 | 1.000 | 107 | 76 | 62 | 54 | 48 | 44 | 77 | 54 | 44 | 38 | 34 | 31 | 27 | 19 | 16 | 13 | 12 | 11 |
| | 1.375 | 197 | 140 | 114 | 99 | 88 | 81 | 141 | 100 | 81 | 70 | 63 | 58 | 49 | 35 | 28 | 25 | 22 | 20 |
| | 1.750 | 300 | 213 | 174 | 151 | 135 | 123 | 215 | 152 | 124 | 108 | 96 | 88 | 75 | 53 | 43 | 38 | 34 | 31 |
| 3.25 | 1.375 | 156 | 110 | 90 | 78 | 70 | 64 | 111 | 79 | 64 | 56 | 50 | 45 | 39 | 28 | 22 | 19 | 17 | 16 |
| | 1.750 | 246 | 174 | 142 | 123 | 110 | 100 | 176 | 124 | 102 | 88 | 79 | 72 | 62 | 44 | 36 | 31 | 28 | 25 |
| | 2.000 | 300 | 221 | 181 | 157 | 140 | 128 | 224 | 158 | 129 | 112 | 100 | 91 | 78 | 55 | 45 | 39 | 35 | 32 |
| 4.00 | 1.750 | 203 | 144 | 117 | 102 | 91 | 83 | 145 | 103 | 84 | 73 | 65 | 59 | 51 | 36 | 29 | 25 | 23 | 21 |
| | 2.000 | 261 | 185 | 151 | 131 | 117 | 107 | 187 | 132 | 108 | 93 | 83 | 76 | 65 | 46 | 38 | 33 | 29 | 27 |
| | 2.500 | 300 | 274 | 224 | 194 | 173 | 158 | 277 | 196 | 160 | 138 | 124 | 113 | 97 | 69 | 56 | 48 | 43 | 40 |
| 5.00 | 2.000 | 214 | 151 | 123 | 107 | 96 | 87 | 153 | 108 | 88 | 76 | 68 | 62 | 53 | 38 | 31 | 27 | 24 | 22 |
| | 2.500 | 300 | 231 | 188 | 163 | 146 | 133 | 233 | 165 | 135 | 117 | 104 | 95 | 82 | 58 | 47 | 41 | 36 | 33 |
| | 3.000 | 300 | 300 | 261 | 226 | 202 | 184 | 300 | 228 | 186 | 161 | 144 | 132 | 113 | 80 | 65 | 56 | 50 | 46 |
| | 3.500 | 300 | 300 | 300 | 289 | 259 | 236 | 300 | 292 | 239 | 207 | 185 | 169 | 145 | 102 | 83 | 72 | 65 | 59 |
| 6.00 | 2.500 | 278 | 197 | 161 | 139 | 124 | 114 | 199 | 141 | 115 | 99 | 89 | 81 | 70 | 49 | 40 | 35 | 31 | 28 |
| | 3.000 | 300 | 278 | 227 | 197 | 176 | 161 | 281 | 199 | 162 | 140 | 126 | 115 | 98 | 70 | 57 | 49 | 44 | 40 |
| | 3.500 | 300 | 300 | 300 | 260 | 233 | 212 | 300 | 263 | 215 | 186 | 166 | 152 | 130 | 92 | 75 | 65 | 58 | 53 |
| | 4.000 | 300 | 300 | 300 | 300 | 292 | 266 | 300 | 300 | 269 | 233 | 208 | 190 | 163 | 115 | 94 | 82 | 73 | 67 |
| 7.00 | 3.000 | 300 | 241 | 197 | 171 | 153 | 139 | 244 | 172 | 141 | 122 | 109 | 100 | 85 | 60 | 49 | 43 | 38 | 35 |
| | 3.500 | 300 | 300 | 263 | 228 | 204 | 186 | 300 | 230 | 188 | 163 | 146 | 133 | 114 | 81 | 66 | 57 | 51 | 46 |
| | 4.000 | 300 | 300 | 300 | 289 | 259 | 236 | 300 | 292 | 239 | 207 | 185 | 169 | 145 | 102 | 83 | 72 | 65 | 59 |
| | 4.500 | 300 | 300 | 300 | 300 | 300 | 288 | 300 | 300 | 290 | 252 | 225 | 205 | 176 | 124 | 102 | 88 | 79 | 72 |
| | 5.000 | 300 | 300 | 300 | 300 | 300 | 300 | 300 | 300 | 300 | 296 | 264 | 241 | 207 | 146 | 119 | 103 | 93 | 84 |
| 8.00 | 3.500 | 300 | 288 | 235 | 203 | 182 | 166 | 291 | 205 | 168 | 145 | 130 | 119 | 102 | 72 | 59 | 51 | 45 | 42 |
| | 4.000 | 300 | 300 | 300 | 261 | 234 | 213 | 300 | 264 | 216 | 187 | 167 | 152 | 131 | 92 | 75 | 65 | 58 | 53 |
| | 4.500 | 300 | 300 | 300 | 300 | 290 | 264 | 300 | 300 | 267 | 231 | 207 | 189 | 162 | 114 | 93 | 81 | 72 | 66 |
| | 5.000 | 300 | 300 | 300 | 300 | 300 | 300 | 300 | 300 | 300 | 277 | 248 | 226 | 194 | 137 | 112 | 97 | 87 | 79 |
| | 5.500 | 300 | 300 | 300 | 300 | 300 | 300 | 300 | 300 | 300 | 300 | 289 | 264 | 226 | 160 | 131 | 113 | 101 | 92 |
| 10.00 | 4.500 | 300 | 300 | 300 | 269 | 241 | 220 | 300 | 272 | 222 | 192 | 172 | 157 | 135 | 95 | 78 | 67 | 60 | 55 |
| | 5.000 | 300 | 300 | 300 | 300 | 294 | 268 | 300 | 300 | 271 | 235 | 210 | 192 | 164 | 116 | 95 | 82 | 73 | 67 |
| | 5.500 | 300 | 300 | 300 | 300 | 300 | 300 | 300 | 300 | 300 | 280 | 250 | 229 | 196 | 139 | 113 | 98 | 88 | 80 |
| | 7.000 | 300 | 300 | 300 | 300 | 300 | 300 | 300 | 300 | 300 | 300 | 300 | 300 | 296 | 209 | 171 | 148 | 132 | 121 |
| 12.00 | 5.500 | 300 | 300 | 300 | 300 | 299 | 273 | 300 | 300 | 276 | 239 | 213 | 195 | 167 | 118 | 96 | 84 | 75 | 68 |
| | 7.000 | 300 | 300 | 300 | 300 | 300 | 300 | 300 | 300 | 300 | 300 | 300 | 300 | 260 | 184 | 150 | 130 | 116 | 106 |
| | 8.000 | 300 | 300 | 300 | 300 | 300 | 300 | 300 | 300 | 300 | 300 | 300 | 300 | 300 | 231 | 189 | 163 | 146 | 133 |
| 14.00 | 7.000 | 300 | 300 | 300 | 300 | 300 | 300 | 300 | 300 | 300 | 300 | 291 | 266 | 228 | 161 | 132 | 114 | 102 | 93 |
| | 8.000 | 300 | 300 | 300 | 300 | 300 | 300 | 300 | 300 | 300 | 300 | 300 | 300 | 290 | 205 | 167 | 145 | 129 | 118 |
| | 10.000 | 300 | 300 | 300 | 300 | 300 | 300 | 300 | 300 | 300 | 300 | 300 | 300 | 300 | 293 | 240 | 207 | 186 | 169 |
| 16.00 | 8.000 | 300 | 300 | 300 | 300 | 300 | 300 | 300 | 300 | 300 | 300 | 300 | 300 | 260 | 184 | 150 | 130 | 116 | 106 |
| | 9.000 | 300 | 300 | 300 | 300 | 300 | 300 | 300 | 300 | 300 | 300 | 300 | 300 | 300 | 227 | 186 | 161 | 144 | 131 |
| | 10.000 | 300 | 300 | 300 | 300 | 300 | 300 | 300 | 300 | 300 | 300 | 300 | 300 | 300 | 272 | 222 | 192 | 172 | 157 |
| 18.00 | 9.000 | 300 | 300 | 300 | 300 | 300 | 300 | 300 | 300 | 300 | 300 | 300 | 300 | 293 | 207 | 169 | 146 | 131 | 119 |
| | 10.000 | 300 | 300 | 300 | 300 | 300 | 300 | 300 | 300 | 300 | 300 | 300 | 300 | 300 | 250 | 204 | 177 | 158 | 144 |
| 20.00 | 10.000 | 300 | 300 | 300 | 300 | 300 | 300 | 300 | 300 | 300 | 300 | 300 | 300 | 300 | 231 | 188 | 163 | 146 | 133 |

[1] Maximum operating pressure is limited for Mounting Styles H and HB. Please refer to maximum operating pressure per bore in Pressure Ratings table located on the dimension page for each of these mounting styles.

View Table of Contents

## Maximum Basic Lengths ($L_A$) (all dimensions in inches)

| Bore Ø | Rod Ø | Rear Pivot Mounts (BB, SB[1], SE, DB) | | | | | | Front and Intermediate Pivot Mounts (D, DD, DE) | | | | | |
|---|---|---|---|---|---|---|---|---|---|---|---|---|---|
| | | Pivoted & Rigidly Guided Rod End Max. Allowable Basic Length ($L_A$) at psi: | | | | | | Pivoted & Rigidly Guided Rod End Max. Allowable Basic Length ($L_A$) at psi: | | | | | |
| | | 500 | 1000 | 1500 | 2000 | 2500 | 3000 | 500 | 1000 | 1500 | 2000 | 2500 | 3000 |
| 1.50 | 0.625 | 35 | 25 | 20 | 18 | 16 | 14 | 25 | 18 | 14 | 13 | 11 | 10 |
| | 1.000 | 85 | 60 | 49 | 42 | 38 | 35 | 64 | 45 | 37 | 32 | 29 | 26 |
| 2.00 | 1.000 | 66 | 47 | 38 | 33 | 29 | 27 | 48 | 34 | 28 | 24 | 22 | 20 |
| | 1.375 | 116 | 82 | 67 | 58 | 52 | 47 | 91 | 64 | 53 | 45 | 41 | 37 |
| 2.50 | 1.000 | 54 | 38 | 31 | 27 | 24 | 22 | 38 | 27 | 22 | 19 | 17 | 16 |
| | 1.375 | 99 | 70 | 57 | 49 | 44 | 40 | 73 | 51 | 42 | 36 | 33 | 30 |
| | 1.750 | 151 | 106 | 87 | 75 | 67 | 61 | 118 | 83 | 68 | 59 | 53 | 48 |
| 3.25 | 1.375 | 78 | 55 | 45 | 39 | 35 | 32 | 56 | 40 | 32 | 28 | 25 | 23 |
| | 1.750 | 123 | 87 | 71 | 62 | 55 | 50 | 91 | 64 | 52 | 45 | 41 | 37 |
| | 2.000 | 157 | 111 | 90 | 78 | 70 | 64 | 118 | 84 | 68 | 59 | 53 | 48 |
| 4.00 | 1.750 | 102 | 72 | 59 | 51 | 45 | 41 | 74 | 52 | 43 | 37 | 33 | 30 |
| | 2.000 | 131 | 92 | 75 | 65 | 58 | 53 | 96 | 68 | 56 | 48 | 43 | 39 |
| | 2.500 | 194 | 137 | 112 | 97 | 87 | 79 | 150 | 106 | 87 | 75 | 67 | 61 |
| 5.00 | 2.000 | 107 | 76 | 62 | 53 | 48 | 44 | 77 | 54 | 44 | 38 | 34 | 31 |
| | 2.500 | 163 | 115 | 94 | 82 | 73 | 67 | 120 | 85 | 69 | 60 | 54 | 49 |
| | 3.000 | 226 | 160 | 130 | 113 | 101 | 92 | 173 | 122 | 100 | 87 | 77 | 71 |
| | 3.500 | 289 | 204 | 167 | 145 | 129 | 118 | 236 | 167 | 136 | 118 | 105 | 96 |
| 6.00 | 2.500 | 139 | 98 | 80 | 70 | 62 | 57 | 100 | 71 | 58 | 50 | 45 | 41 |
| | 3.000 | 197 | 139 | 114 | 98 | 88 | 80 | 144 | 102 | 83 | 72 | 65 | 59 |
| | 3.500 | 260 | 184 | 150 | 130 | 116 | 106 | 196 | 139 | 113 | 98 | 88 | 80 |
| | 4.000 | 300 | 231 | 188 | 163 | 146 | 133 | 257 | 181 | 148 | 128 | 115 | 105 |
| 7.00 | 3.000 | 171 | 121 | 99 | 85 | 76 | 70 | 124 | 87 | 71 | 62 | 55 | 50 |
| | 3.500 | 228 | 161 | 132 | 114 | 102 | 93 | 168 | 119 | 97 | 84 | 75 | 69 |
| | 4.000 | 289 | 204 | 167 | 145 | 129 | 118 | 220 | 155 | 127 | 110 | 98 | 90 |
| | 4.500 | 300 | 249 | 203 | 176 | 157 | 144 | 278 | 197 | 161 | 139 | 124 | 114 |
| | 5.000 | 300 | 293 | 239 | 207 | 185 | 169 | 300 | 243 | 198 | 172 | 154 | 140 |
| 8.00 | 3.500 | 203 | 144 | 117 | 102 | 91 | 83 | 147 | 104 | 85 | 74 | 66 | 60 |
| | 4.000 | 261 | 185 | 151 | 131 | 117 | 107 | 192 | 136 | 111 | 96 | 86 | 79 |
| | 4.500 | 300 | 229 | 187 | 162 | 145 | 132 | 244 | 172 | 141 | 122 | 109 | 99 |
| | 5.000 | 300 | 274 | 224 | 194 | 174 | 158 | 300 | 213 | 174 | 150 | 134 | 123 |
| | 5.500 | 300 | 300 | 261 | 226 | 202 | 185 | 300 | 257 | 210 | 182 | 163 | 149 |
| 10.00 | 4.500 | 269 | 190 | 155 | 135 | 120 | 110 | 195 | 138 | 112 | 97 | 87 | 80 |
| | 5.000 | 300 | 232 | 190 | 164 | 147 | 134 | 291 | 206 | 168 | 146 | 130 | 119 |
| | 5.500 | 300 | 277 | 226 | 196 | 175 | 160 | 300 | 300 | 272 | 236 | 211 | 192 |
| | 7.000 | 300 | 300 | 300 | 296 | 265 | 242 | 241 | 170 | 139 | 120 | 108 | 98 |
| 12.00 | 5.500 | 300 | 236 | 193 | 167 | 149 | 136 | 243 | 171 | 140 | 121 | 108 | 99 |
| | 7.000 | 300 | 300 | 300 | 260 | 233 | 213 | 300 | 300 | 296 | 257 | 229 | 209 |
| | 8.000 | 300 | 300 | 300 | 300 | 292 | 267 | 300 | 278 | 227 | 196 | 176 | 160 |
| 14.00 | 7.000 | 300 | 300 | 263 | 228 | 204 | 186 | 300 | 238 | 194 | 168 | 151 | 137 |
| | 8.000 | 300 | 300 | 300 | 290 | 259 | 236 | 300 | 300 | 300 | 300 | 300 | 281 |
| | 10.000 | 300 | 300 | 300 | 300 | 300 | 300 | 300 | 300 | 254 | 220 | 197 | 180 |
| 16.00 | 8.000 | 300 | 300 | 300 | 260 | 233 | 213 | 300 | 272 | 222 | 192 | 172 | 157 |
| | 9.000 | 300 | 300 | 300 | 300 | 288 | 263 | 300 | 300 | 281 | 244 | 218 | 199 |
| | 10.000 | 300 | 300 | 300 | 300 | 300 | 300 | 300 | 300 | 300 | 300 | 269 | 245 |
| 18.00 | 9.000 | 300 | 300 | 300 | 293 | 262 | 239 | 300 | 300 | 250 | 216 | 194 | 177 |
| | 10.000 | 300 | 300 | 300 | 300 | 300 | 289 | 300 | 300 | 300 | 267 | 239 | 218 |
| 20.00 | 10.000 | 300 | 300 | 300 | 300 | 292 | 267 | 300 | 300 | 278 | 241 | 215 | 196 |

[1] Maximum operating pressure is limited for Mounting Style SB. Please refer to maximum operating pressure per bore in Pressure Ratings table located on the dimension page for Mounting Styles SB.

View Table of Contents

## An Introduction to Cushioning

Cushioning is recommended as a means of controlling the deceleration of masses, or for applications where piston speed is in excess of 4 in/sec and the piston will make full stroke. Cushioning extends cylinder life and reduces undesirable noise and hydraulic shock. Built-in “cushions” are optional and can be supplied at the head and cap ends of a cylinder without affecting its envelope or mounting dimensions.

## Standard Cushioning

**Ideal cushion performance shows an almost uniform** absorption of energy along the cushioning length, as shown. Many forms of cushioning exist, and each has its own specific merits and advantages.

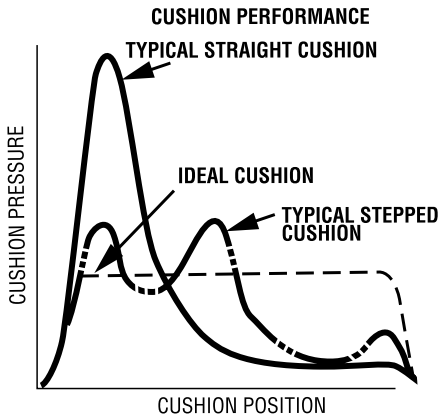


In order to cover the majority of applications, 2H/3H cylinders are supplied with profiled cushioning as standard. Final speed may be adjusted using the cushion screw. The performance of profiled cushioning is indicated on the diagram, and cushion performance for each of the rod sizes available is illustrated graphically in the charts on the following pages.

Note: Cushion performance will be affected by the use of water or high water based fluids. Please consult factory for details.

## Cushion Length

Where specified, 2H/2HD/2HB and 3H/3HD/3HB cylinders incorporate the longest cushion sleeve and spear that can be accommodated within the standard envelope without reducing the rod bearing and piston bearing length. See cushion lengths on the next page. Cushions are adjustable via recessed needle valves.

## Cushion Calculation

The charts on the cushion energy absorption capacity data page show the energy absorption capacity for each bore/rod combination at the head (annulus) and the cap (full bore) ends of cylinder. The charts are valid for piston velocities within a range of 0.33 to 1 ft/s. For velocities between 1ft/s and 1.64 ft/s the energy values derived from the charts should be reduced by 25%. For velocities less than 0.33 ft/s where large masses are involved, and for velocities greater than 1.60 ft/s, a special cushion profile may be required. Please consult the factory for details.

The cushion capacity of the head end is less than the cap, and reduces to zero at high drive pressures due to the pressure intensification effect across the piston.

The energy absorption capacity of the cushion decreases with drive pressure.

## Formula

Cushioning calculations are based on the formula $E=(1/2)mv^2$ for horizontal applications. For inclined or vertically downward or upward applications, this is modified to:

$E = (1/2)mv^2 + mg(L/12) \times \sin(a)$
(for inclined or vertically downward direction of mass)

$E = (1/2)mv^2 - mg(L/12) \times \sin(a)$
(for inclined vertically upward direction of mass)

where:

E = energy absorbed in ft-lb
g = acceleration due to gravity = 32.2 ft/s$^2$
v = velocity in ft/s
L = length of cushion in inches (see cushion length chart on the next page).
m = mass of load in slug (including piston, rod and rod end accessories.
a = angle to the horizontal in degrees
p = pressure in psi

## Example:

The following example shows how to calculate the energy developed by masses moving in a straight line. For non-linear motion, other calculations are required; please consult the factory. The example assumes that the bore and rod diameter are already appropriate for the application. The effects of friction on the cylinder and load have been ignored.

Selected bore/rod 6.00" bore x 2.50" rod (No. 1 rod)

Cushion at the cap end.

Pressure = 2,500 psi

Mass = 685 slugs = weight in lb / (32.2 ft/s$^2$)

Velocity = 1.3 ft/s

Cushion length = 1.313 inch

a = 45°

Sin (a) = 0.70

$E = (1/2)mv^2 + mgl/12 \times \sin(a)$
$= (1/2) \times 685 \times 1.3^2 + 685 \times 32.2 \times 1.313/12 \times 0.70$
$= 2{,}268$ ft-lb

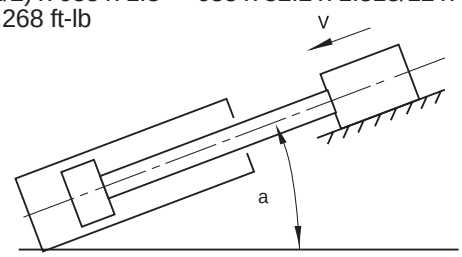


Note: In the above example velocity is greater than 1 ft/s Therefore, a de-rating factor of 0.75 must be applied to the calculated value of E. Applying this correction factor will increase the energy value to 3024 ft-lb (2268/0.75 = 3024 ft-lb). A review of the graph for the cap end cushion of a 6 inch bore x 2.50" rod cylinder operating at 2500 psi indicates that it can absorb approximately 3200 ft-lb maximum of energy. Since 3024 ft-lb is less than the maximum allowable of 3200 ft-lb, the cylinder can be applied as indicated. If the calculated energy exceeds the value shown on the curve, select a larger bore cylinder and/or reduce the operating pressure and recalculate the energy. Compare the newly calculated energy value to the appropriate curve to ensure it does not exceed the maximum allowable energy.

View Table of Contents

## Cushion Length Chart (Series 2H/2HD/2HB & 3H/3HD/3HB Cylinders)

| Bore Ø | Rod Ø | Effective Cushion Length | |
|---|---|---|---|
| | | Head | Cap |
| 1.50 | 0.625 | 0.924 | 1.000 |
| | 1.000 | 0.927 | 1.000 |
| 2.00 | 1.000 | 0.927 | 0.938 |
| | 1.375 | 0.925 | 0.938 |
| 2.50 | 1.000 | 0.927 | 0.938 |
| | 1.750 | 0.928 | 0.938 |
| | 1.375 | 0.925 | 0.938 |
| 3.25 | 1.375 | 1.175 | 1.125 |
| | 2.000 | 0.862 | 1.125 |
| | 1.750 | 1.178 | 1.125 |
| 4.00 | 1.750 | 1.178 | 1.063 |
| | 2.500 | 0.869 | 1.063 |
| | 2.000 | 0.862 | 1.063 |
| 5.00 | 2.000 | 0.862 | 0.938 |
| | 3.500 | 0.869 | 0.938 |
| | 2.500 | 0.869 | 0.938 |
| | 3.000 | 0.869 | 0.938 |
| 6.00 | 2.500 | 1.119 | 1.313 |
| | 4.000 | 1.119 | 1.313 |
| | 3.000 | 1.119 | 1.313 |
| | 3.500 | 0.869 | 1.313 |
| 7.00 | 3.000 | 1.619 | 1.750 |
| | 5.000 | 1.496 | 1.750 |
| | 3.500 | 1.619 | 1.750 |
| | 4.000 | 1.119 | 1.750 |
| | 4.500 | 1.496 | 1.750 |
| 8.00 | 3.500 | 1.869 | 1.813 |
| | 5.500 | 1.745 | 1.813 |
| | 4.000 | 1.119 | 1.813 |
| | 4.500 | 1.496 | 1.813 |
| | 5.000 | 1.496 | 1.813 |

View Table of Contents

## Cushion Energy Absorption Capacity Data

The cushion energy absorption data shown below is based on the maximum fatigue-free pressure developed in the tube. For application with a life cycle of less than $10^6$ cycles, greater energy absorption figures can be applied. Please consult the factory if further information is required.

### Head End

**STANDARD ROD DIA.**

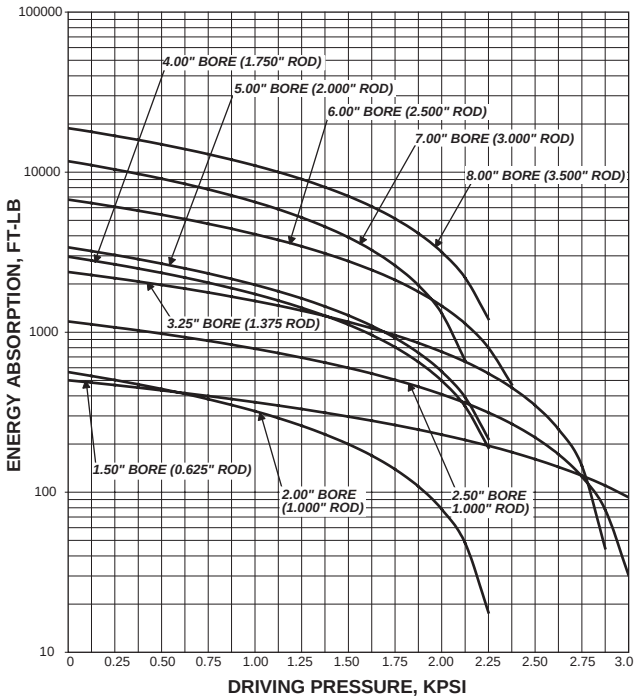


**MAXIMUM ROD DIA.**

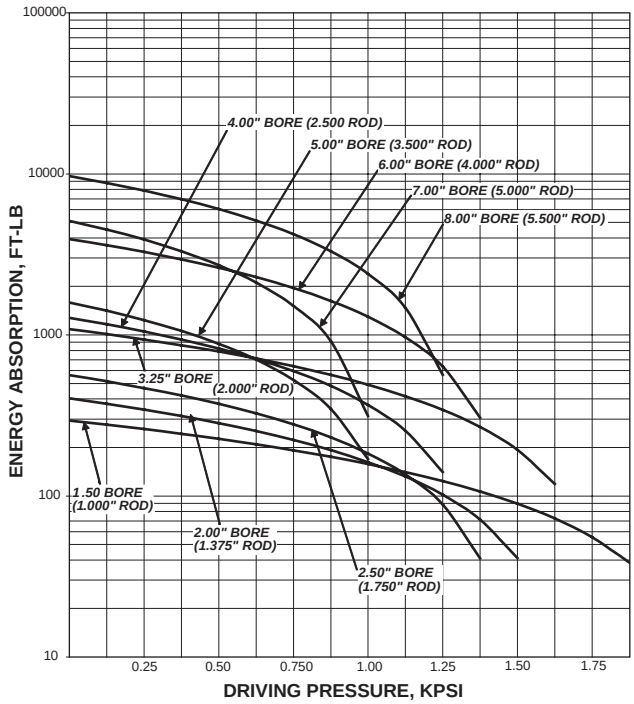


**FIRST OVERSIZE ROD DIA.**

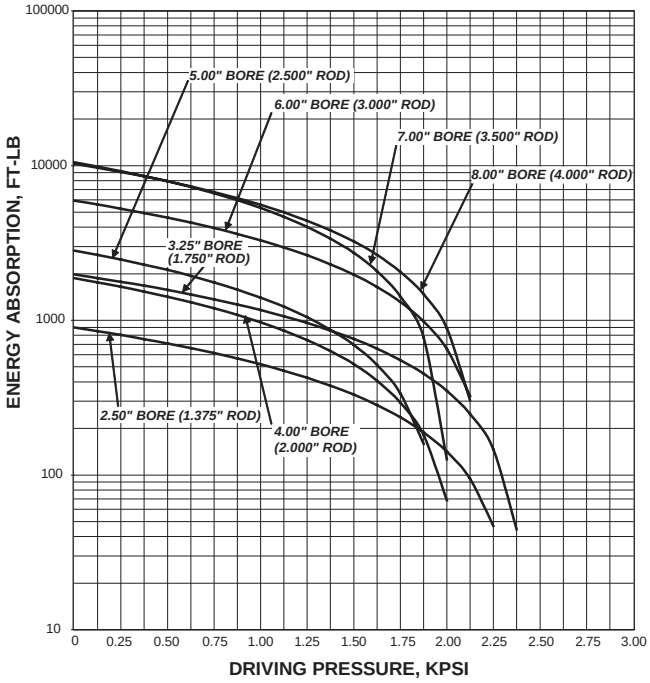


**SECOND OVERSIZE ROD DIA.**

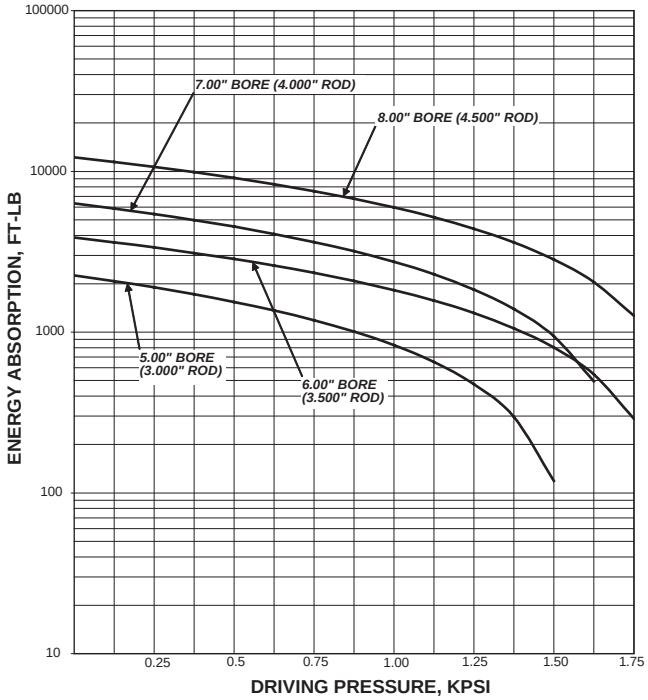

View Table of Contents

## Cushion Energy Absorption Capacity Data

The cushion energy absorption data shown below is based on the maximum fatigue-free pressure developed in the tube. For application with a life cycle of less than $10^6$ cycles, greater energy absorption figures can be applied. Please consult the factory if further information is required.

### Head End

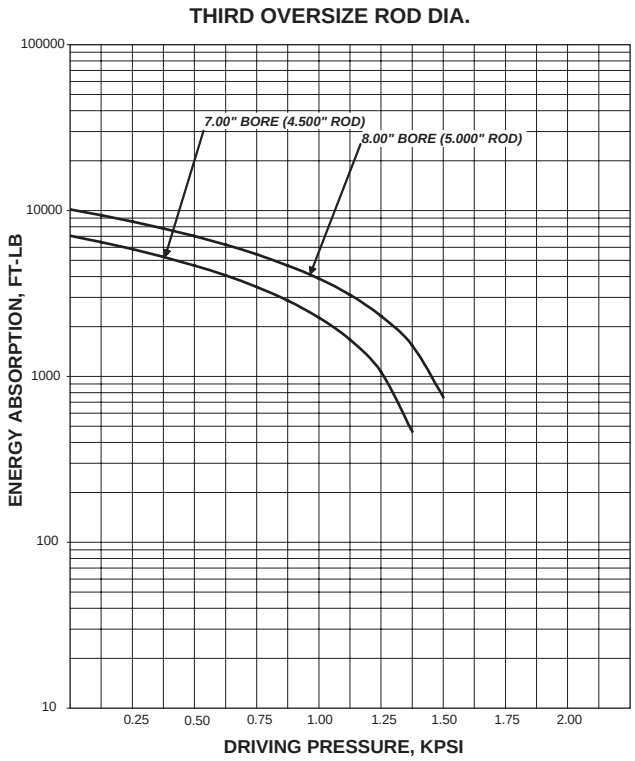

View Table of Contents

## Cushion Energy Absorption Capacity Data

The cushion energy absorption data shown below is based on the maximum fatigue-free pressure developed in the tube. For application with a life cycle of less than $10^6$ cycles, greater energy absorption figures can be applied. Please consult the factory if further information is required.

**Note: Cap end cushioned cylinders with oversize port and hydraulic fluid flow entering the cap that exceeds 25 ft/second should be specified with solid cap cushion design.**

### Cap End

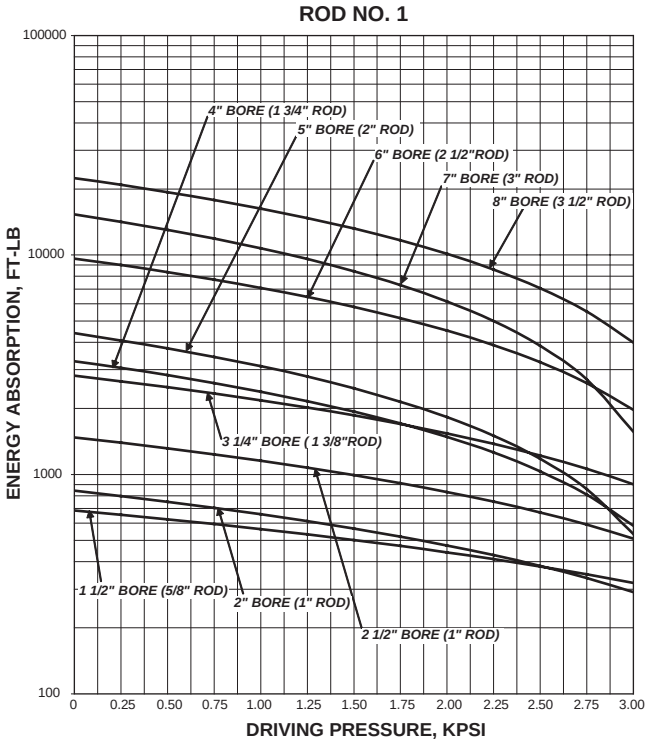


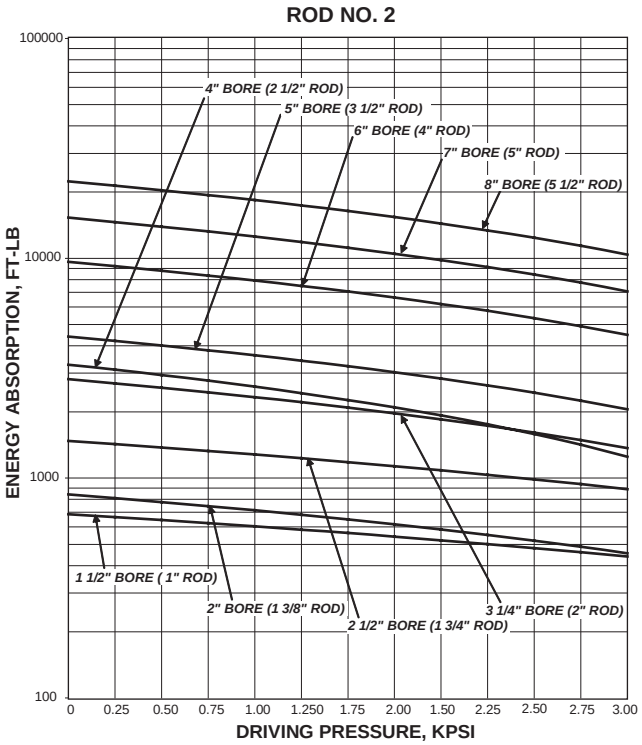


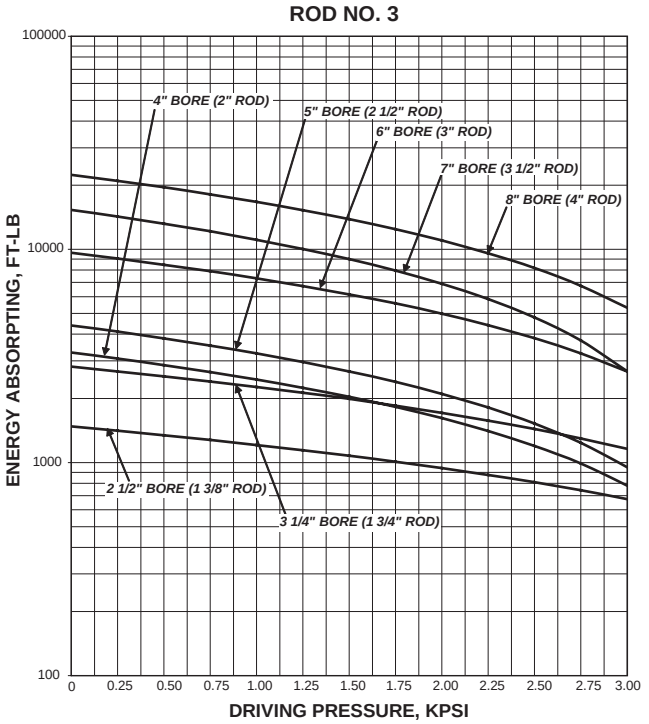


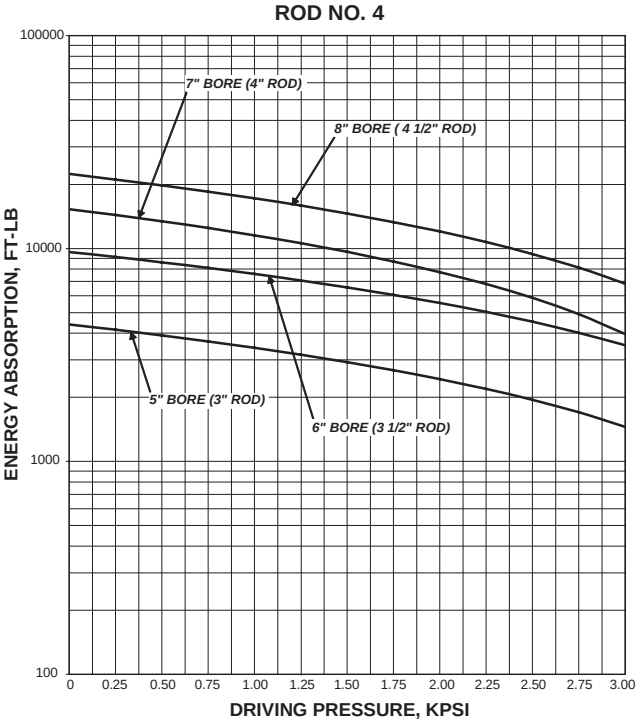

View Table of Contents

## Cushion Energy Absorption Capacity Data

The cushion energy absorption data shown below is based on the maximum fatigue-free pressure developed in the tube. For application with a life cycle of less than $10^6$ cycles, greater energy absorption figures can be applied. Please consult the factory if further information is required.

**Note: Cap end cushioned cylinders with oversize port and hydraulic fluid flow entering the cap that exceeds 25 ft/second should be specified with solid cap cushion design.**

### Cap End

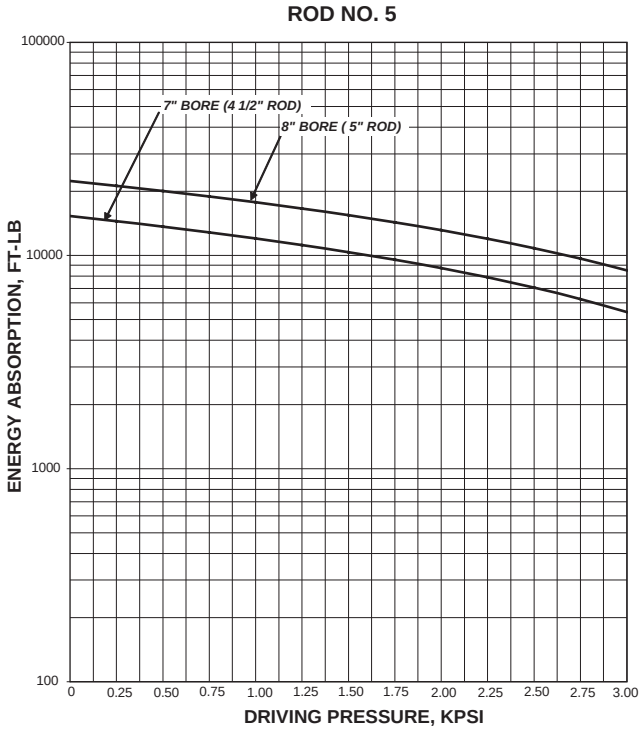

View Table of Contents

# Notes

View Table of Contents

## Safety Guide for Selecting and Using Hydraulic, Pneumatic Cylinders and Their Accessories

**WARNING: ⚠ FAILURE OF THE CYLINDER, ITS PARTS, ITS MOUNTING, ITS CONNECTIONS TO OTHER OBJECTS, OR ITS CONTROLS CAN RESULT IN:**

- **Unanticipated or uncontrolled movement of the cylinder or objects connected to it.**
- **Falling of the cylinder or objects held up by it.**
- **Fluid escaping from the cylinder, potentially at high velocity.**

**THESE EVENTS COULD CAUSE DEATH OR PERSONAL INJURY BY, FOR EXAMPLE, PERSONS FALLING FROM HIGH LOCATIONS, BEING CRUSHED OR STRUCK BY HEAVY OR FAST MOVING OBJECTS, BEING PUSHED INTO DANGEROUS EQUIPMENT OR SITUATIONS, OR SLIPPING ON ESCAPED FLUID.**

Before selecting or using Parker Hannifin Corporation (the Company) cylinders or related accessories, it is important that you read, understand and follow the following safety information. Training is advised before selecting and using the Company's products.

### 1.0 General Instructions

**1.1 Scope** – This safety guide provides instructions for selecting and using (including assembling, installing, and maintaining) cylinder products. This safety guide is a supplement to and is to be used with the specific Company publications for the specific cylinder products that are being considered for use.

**1.2 Fail Safe** – Cylinder products can and do fail without warning for many reasons. All systems and equipment should be designed in a fail-safe mode so that if the failure of a cylinder product occurs people and property won't be endangered.

**1.3 Distribution** – Provide a free copy of this safety guide to each person responsible for selecting or using cylinder products. Do not select or use the Company's cylinders without thoroughly reading and understanding this safety guide as well as the specific Company publications for the products considered or selected.

**1.4 User Responsibility** – Due to very wide variety of cylinder applications and cylinder operating conditions, the Company does not warrant that any particular cylinder is suitable for any specific application. This safety guide does not analyze all technical parameters that must be considered in selecting a product. The hydraulic and pneumatic cylinders outlined in this catalog are designed to the Company's design guidelines and do not necessarily meet the design guideline of other agencies such as American Bureau of Shipping, ASME Pressure Vessel Code etc. The user, through its own analysis and testing, is solely responsible for:

- Making the final selection of the cylinders and related accessories.
- Determining if the cylinders are required to meet specific design requirements as required by the Agency(s) or industry standards covering the design of the user's equipment.
- Assuring that the user's requirements are met, OSHA requirements are met, and safety guidelines from the applicable agencies such as but not limited to ANSI are followed and that the use presents no health or safety hazards.
- Providing all appropriate health and safety warnings on the equipment on which the cylinders are used.

**1.5 Additional Questions** – Call the appropriate Company technical service department if you have any questions or require any additional information. See the Company publication for the product being considered or used, or call 1-847-298-2400, or go to www.parker.com, for telephone numbers of the appropriate technical service department.

### 2.0 Cylinder and Accessories Selection

**2.1 Seals** – Part of the process of selecting a cylinder is the selection of seal compounds. Before making this selection, consult the "seal information page(s)" of the publication for the series of cylinders of interest.

The application of cylinders may allow fluids such as cutting fluids, wash down fluids etc. to come in contact with the external area of the cylinder. These fluids may attack the piston rod wiper and or the primary seal and must be taken into account when selecting and specifying seal compounds.

Dynamic seals will wear. The rate of wear will depend on many operating factors. Wear can be rapid if a cylinder is mis-aligned or if the cylinder has been improperly serviced. The user must take seal wear into consideration in the application of cylinders.

**2.2 Piston Rods** – Possible consequences of piston rod failure or separation of the piston rod from the piston include, but are not limited to are:

- Piston rod and or attached load thrown off at high speed.
- High velocity fluid discharge.
- Piston rod extending when pressure is applied in the piston retract mode.

Piston rods or machine members attached to the piston rod may move suddenly and without warning as a consequence of other conditions occurring to the machine such as, but not limited to:

- Unexpected detachment of the machine member from the piston rod.
- Failure of the pressurized fluid delivery system (hoses, fittings, valves, pumps, compressors) which maintain cylinder position.
- Catastrophic cylinder seal failure leading to sudden loss of pressurized fluid.
- Failure of the machine control system.

Follow the recommendations of the "Piston Rod Selection Chart and Data" in the publication for the series of cylinders of interest. The suggested piston rod diameter in these charts must be followed in order to avoid piston rod buckling.

Piston rods are not normally designed to absorb bending moments or loads which are perpendicular to the axis of piston rod motion. These additional loads can cause the piston rod to fail. If these types of additional loads are expected to be imposed on the piston rod, their magnitude should be made known to our engineering department.

The cylinder user should always make sure that the piston rod is securely attached to the machine member.

On occasion cylinders are ordered with double rods (a piston rod extended from both ends of the cylinder). In some cases a stop is threaded on to one of the piston rods and used as an external stroke adjuster. On occasions spacers are attached to the machine member connected to the piston rod and also used as a stroke adjuster. In both cases the stops will create a pinch point and the user should consider appropriate use of guards. If these external stops are not perpendicular to the mating contact surface, or if debris is trapped between the contact surfaces, a bending moment will be placed on the piston rod, which can lead to piston rod failure. An external stop will also negate the effect of cushioning and will subject the piston rod to impact loading. Those two (2) conditions can cause piston rod failure. Internal stroke adjusters are available with and without cushions. The use of external stroke adjusters should be reviewed with our engineering department.

The piston rod to piston and the stud to piston rod threaded connections are secured with an anaerobic adhesive. The strength of the adhesive decreases with increasing temperature. Cylinders which can be exposed to temperatures above +250°F (+121°C) are to be ordered with a non studded piston rod and a pinned piston to rod joint.

**2.3 Cushions** – Cushions should be considered for cylinder applications when the piston velocity is expected to be over 4 inches/second.

Cylinder cushions are normally designed to absorb the energy of a linear applied load. A rotating mass has considerably more energy than the same mass moving in a linear mode. Cushioning for a rotating mass application should be reviewed by our engineering department.

**2.4 Cylinder Mountings** – Some cylinder mounting configurations may have certain limitations such as but not limited to minimum stroke for side or foot mounting cylinders or pressure de-ratings for certain mounts. Carefully review the catalog for these types of restrictions.

Always mount cylinders using the largest possible high tensile alloy steel socket head cap screws that can fit in the cylinder mounting holes and torque them to the manufacturer's recommendations for their size.

**2.5 Port Fittings** – Hydraulic cylinders applied with meter out or deceleration circuits are subject to intensified pressure at piston rod end.

The rod end pressure is approximately equal to:

$$\frac{\text{operating pressure x effective cap end area}}{\text{effective rod end piston area}}$$

Contact your connector supplier for the pressure rating of individual connectors.

### 3.0 Cylinder and Accessories Installation and Mounting

**3.1 Installation**

**3.1.1** – Cleanliness is an important consideration, and cylinders are shipped with the ports plugged to protect them from contaminants entering the ports. These plugs should not be removed until the piping is to be installed. Before making the connection to the cylinder ports, piping should be thoroughly cleaned to remove all chips or burrs which might have resulted from threading or flaring operations.

View Table of Contents

**3.1.2** – Cylinders operating in an environment where air drying materials are present such as fast-drying chemicals, paint, or weld splatter, or other hazardous conditions such as excessive heat, should have shields installed to prevent damage to the piston rod and piston rod seals.

**3.1.3** – Proper alignment of the cylinder piston rod and its mating component on the machine should be checked in both the extended and retracted positions. Improper alignment will result in excessive rod gland and/or cylinder bore wear. On fixed mounting cylinders attaching the piston rod while the rod is retracted will help in achieving proper alignment.

**3.1.4** – Sometimes it may be necessary to rotate the piston rod in order to thread the piston rod into the machine member. This operation must always be done with zero pressure being applied to either side of the piston. Failure to follow this procedure may result in loosening the piston to rod-threaded connection. In some rare cases the turning of the piston rod may rotate a threaded piston rod gland and loosen it from the cylinder head. Confirm that this condition is not occurring. If it does, re-tighten the piston rod gland firmly against the cylinder head.

For double rod cylinders it is also important that when attaching or detaching the piston rod from the machine member that the torque be applied to the piston rod end of the cylinder that is directly attaching to the machine member with the opposite end unrestrained. If the design of the machine is such that only the rod end of the cylinder opposite to where the rod attaches to the machine member can be rotated, consult the factory for further instructions.

**3.2 Mounting Recommendations**

**3.2.1** – Always mount cylinders using the largest possible high tensile alloy steel socket head screws that can fit in the cylinder mounting holes and torque them to the manufacturer's recommendations for their size.

**3.2.2** – Side-Mounted Cylinders – In addition to the mounting bolts, cylinders of this type should be equipped with thrust keys or dowel pins located so as to resist the major load.

**3.2.3** – Tie Rod Mounting – Cylinders with tie rod mountings are recommended for applications where mounting space is limited. The standard tie rod extension is shown as BB in dimension tables. Longer or shorter extensions can be supplied. Nuts used for this mounting style should be torqued to the same value as the tie rods for that bore size.

**3.2.4** – Flange Mount Cylinders – The controlled diameter of the rod gland extension on head end flange mount cylinders can be used as a pilot to locate the cylinders in relation to the machine. After alignment has been obtained, the flanges may be drilled for pins or dowels to prevent shifting.

**3.2.5** – Trunnion Mountings – Cylinders require lubricated bearing blocks with minimum bearing clearances. Bearing blocks should be carefully aligned and rigidly mounted so the trunnions will not be subjected to bending moments. The rod end should also be pivoted with the pivot pin in line and parallel to axis of the trunnion pins.

**3.2.6** – Clevis Mountings – Cylinders should be pivoted at both ends with centerline of pins parallel to each other. After cylinder is mounted, be sure to check to assure that the cylinder is free to swing through its working arc without interference from other machine parts.

**4.0 Cylinder and Accessories Maintenance, Troubleshooting and Replacement**

**4.1 Storage** – At times cylinders are delivered before a customer is ready to install them and must be stored for a period of time. When storage is required the following procedures are recommended.

**4.1.1** – Store the cylinders in an indoor area which has a dry, clean and noncorrosive atmosphere. Take care to protect the cylinder from both internal corrosion and external damage.

**4.1.2** – Whenever possible cylinders should be stored in a vertical position (piston rod up). This will minimize corrosion due to possible condensation which could occur inside the cylinder. This will also minimize seal damage.

**4.1.3** – Port protector plugs should be left in the cylinder until the time of installation.

**4.1.4** – If a cylinder is stored full of hydraulic fluid, expansion of the fluid due to temperature changes must be considered. Installing a check valve with free flow out of the cylinder is one method.

**4.1.5** – When cylinders are mounted on equipment that is stored outside for extended periods, exposed unpainted surfaces, e.g. piston rod, must be coated with a rust-inhibiting compound to prevent corrosion.

**4.2 Cylinder Trouble Shooting**

**4.2.1** – **External Leakage**

**4.2.1.1** – Rod seal leakage can generally be traced to worn or damaged seals. Examine the piston rod for dents, gouges or score marks, and replace piston rod if surface is rough.

Rod seal leakage could also be traced to gland wear. If clearance is excessive, replace rod bushing and seal. Rod seal leakage can also be traced to seal deterioration. If seals are soft or gummy or brittle, check compatibility of seal material with lubricant used if air cylinder, or operating fluid if hydraulic cylinder. Replace with seal material, which is compatible with these fluids. If the seals are hard or have lost elasticity, it is usually due to exposure to temperatures in excess of 165°F. (+74°C). Shield the cylinder from the heat source to limit temperature to 350°F. (+177°C.) and replace with fluorocarbon seals.

**4.2.1.2** – Cylinder body seal leak can generally be traced to loose tie rods. Torque the tie rods to manufacturer's recommendation for that bore size.

Excessive pressure can also result in cylinder body seal leak. Determine maximum pressure to rated limits. Replace seals and retorque tie rods as in paragraph above. Excessive pressure can also result in cylinder body seal leak. Determine if the pressure rating of the cylinder has been exceeded. If so, bring the operating pressure down to the rating of the cylinder and have the tie rods replaced.

Pinched or extruded cylinder body seal will also result in a leak. Replace cylinder body seal and retorque as in paragraph above.

Cylinder body seal leakage due to loss of radial squeeze which shows up in the form of flat spots or due to wear on the O.D. or I.D. – Either of these are symptoms of normal wear due to high cycle rate or length of service. Replace seals as per paragraph above.

**4.2.2** – **Internal Leakage**

**4.2.2.1** – Piston seal leak (by-pass) 1 to 3 cubic inches per minute leakage is considered normal for piston ring construction. Virtually no static leak with lipseal type seals on piston should be expected. Piston seal wear is a usual cause of piston seal leakage. Replace seals as required.

**4.2.2.2** – With lipseal type piston seals excessive back pressure due to over-adjustment of speed control valves could be a direct cause of rapid seal wear. Contamination in a hydraulic system can result in a scored cylinder bore, resulting in rapid seal wear. In either case, replace piston seals as required.

**4.2.2.3** – What appears to be piston seal leak, evidenced by the fact that the cylinder drifts, is not always traceable to the piston. To make sure, it is suggested that one side of the cylinder piston be pressurized and the fluid line at the opposite port be disconnected. Observe leakage. If none is evident, seek the cause of cylinder drift in other component parts in the circuit.

**4.2.3** – **Cylinder Fails to Move the Load**

**4.2.3.1** – Pneumatic or hydraulic pressure is too low. Check the pressure at the cylinder to make sure it is to circuit requirements.

**4.2.3.2** – Piston Seal Leak – Operate the valve to cycle the cylinder and observe fluid flow at valve exhaust ports at end of cylinder stroke. Replace piston seals if flow is excessive.

**4.2.3.3** – Cylinder is undersized for the load – Replace cylinder with one of a larger bore size.

**4.3 Erratic or Chatter Operation**

**4.3.1** – Excessive friction at rod gland or piston bearing due to load misalignment – Correct cylinder-to-load alignment.

**4.3.2** – Cylinder sized too close to load requirements – Reduce load or install larger cylinder.

**4.3.3** – Erratic operation could be traced to the difference between static and kinetic friction. Install speed control valves to provide a back pressure to control the stroke.

**4.4 Cylinder Modifications, Repairs, or Failed Component** – Cylinders as shipped from the factory are not to be disassembled and or modified. If cylinders require modifications, these modifications must be done at company locations or by the Company's certified facilities. The Cylinder Division Engineering Department must be notified in the event of a mechanical fracture or permanent deformation of any cylinder component (excluding seals). This includes a broken piston rod, tie rod, mounting accessory or any other cylinder component. The notification should include all operation and application details. This information will be used to provide an engineered repair that will prevent recurrence of the failure.

It is allowed to disassemble cylinders for the purpose of replacing seals or seal assemblies. However, this work must be done by strictly following all the instructions provided with the seal kits.

View Table of Contents

# Offer of Sale

The items described in this document and other documents and descriptions provided by Parker Hannifin Corporation, its subsidiaries and its authorized distributors ("Seller") are hereby offered for sale at prices to be established by Seller. This offer and its acceptance by any customer ("Buyer") shall be governed by all of the following Terms and Conditions. Buyer's order for any item described in its document, when communicated to Seller verbally, or in writing, shall constitute acceptance of this offer. All goods, services or work described will be referred to as "Products".

**1. Terms and Conditions.** Seller's willingness to offer Products, or accept an order for Products, to or from Buyer is subject to these Terms and Conditions or any newer version of the terms and conditions found on-line at www.parker.com/saleterms/. Seller objects to any contrary or additional terms or conditions of Buyer's order or any other document issued by Buyer.

**2. Price Adjustments; Payments.** Prices stated on Seller's quote or other documentation offered by Seller are valid for 30 days, and do not include any sales, use, or other taxes unless specifically stated. Unless otherwise specified by Seller, all prices are F.C.A. Seller's facility (INCOTERMS 2010). Payment is subject to credit approval and is due 30 days from the date of invoice or such other term as required by Seller's Credit Department, after which Buyer shall pay interest on any unpaid invoices at the rate of 1.5% per month or the maximum allowable rate under applicable law.

**3. Delivery Dates; Title and Risk; Shipment.** All delivery dates are approximate and Seller shall not be responsible for any damages resulting from any delay. Regardless of the manner of shipment, title to any products and risk of loss or damage shall pass to Buyer upon placement of the products with the shipment carrier at Seller's facility. Unless otherwise stated, Seller may exercise its judgment in choosing the carrier and means of delivery. No deferment of shipment at Buyers' request beyond the respective dates indicated will be made except on terms that will indemnify, defend and hold Seller harmless against all loss and additional expense. Buyer shall be responsible for any additional shipping charges incurred by Seller due to Buyer's acts or omissions.

**4. Warranty.** Seller warrants that the Products sold hereunder shall be free from defects in material or workmanship for a period of eighteen months from the date of delivery to Buyer. The prices charged for Seller's products are based upon the exclusive limited warranty stated above, and upon the following disclaimer: **DISCLAIMER OF WARRANTY: THIS WARRANTY COMPRISES THE SOLE AND ENTIRE WARRANTY PERTAINING TO PRODUCTS PROVIDED HEREUNDER. SELLER DISCLAIMS ALL OTHER WARRANTIES, EXPRESS AND IMPLIED, INCLUDING DESIGN, MERCHANTABILITY AND FITNESS FOR A PARTICULAR PURPOSE.**

**5. Claims; Commencement of Actions.** Buyer shall promptly inspect all Products upon delivery. No claims for shortages will be allowed unless reported to the Seller within 10 days of delivery. No other claims against Seller will be allowed unless asserted in writing within 30 days after delivery. Buyer shall notify Seller of any alleged breach of warranty within 30 days after the date the defect is or should have been discovered by Buyer. Any action based upon breach of this agreement or upon any other claim arising out of this sale (other than an action by Seller for an amount due on any invoice) must be commenced within 12 months from the date of the breach without regard to the date breach is discovered.

**6. LIMITATION OF LIABILITY.** UPON NOTIFICATION, SELLER WILL, AT ITS OPTION, REPAIR OR REPLACE A DEFECTIVE PRODUCT, OR REFUND THE PURCHASE PRICE. **IN NO EVENT SHALL SELLER BE LIABLE TO BUYER FOR ANY SPECIAL, INDIRECT, INCIDENTAL OR CONSEQUENTIAL DAMAGES ARISING OUT OF, OR AS THE RESULT OF, THE SALE, DELIVERY, NON-DELIVERY, SERVICING, USE OR LOSS OF USE OF THE PRODUCTS OR ANY PART THEREOF, OR FOR ANY CHARGES OR EXPENSES OF ANY NATURE INCURRED WITHOUT SELLER'S WRITTEN CONSENT, EVEN IF SELLER HAS BEEN NEGLIGENT, WHETHER IN CONTRACT, TORT OR OTHER LEGAL THEORY. IN NO EVENT SHALL SELLER'S LIABILITY UNDER ANY CLAIM MADE BY BUYER EXCEED THE PURCHASE PRICE OF THE PRODUCTS.**

**7. User Responsibility.** The user, through its own analysis and testing, is solely responsible for making the final selection of the system and Product and assuring that all performance, endurance, maintenance, safety and warning requirements of the application are met. The user must analyze all aspects of the application and follow applicable industry standards and Product information. If Seller provides Product or system options, the user is responsible for determining that such data and specifications are suitable and sufficient for all applications and reasonably foreseeable uses of the Products or systems.

**8. Loss to Buyer's Property.** Any designs, tools, patterns, materials, drawings, confidential information or equipment furnished by Buyer or any other items which become Buyer's property, will be considered obsolete and may be destroyed by Seller after two consecutive years have elapsed without Buyer ordering the items manufactured using such property. Seller shall not be responsible for any loss or damage to such property while it is in Seller's possession or control.

**9. Special Tooling.** A tooling charge may be imposed for any special tooling, including without limitation, dies, fixtures, molds and patterns, acquired to manufacture Products. Such special tooling shall be and remain Seller's property notwithstanding payment of any charges by Buyer. In no event will Buyer acquire any interest in apparatus belonging to Seller which is utilized in the manufacture of the Products, even if such apparatus has been specially converted or adapted for such manufacture and notwithstanding any charges paid by Buyer. Unless otherwise agreed, Seller shall have the right to alter, discard or otherwise dispose of any special tooling or other property in its sole discretion at any time.

**10. Buyer's Obligation; Rights of Seller.** To secure payment of all sums due or otherwise, Seller shall retain a security interest in the goods delivered and this agreement shall be deemed a Security Agreement under the Uniform Commercial Code. Buyer authorizes Seller as its attorney to execute and file on Buyer's behalf all documents Seller deems necessary to perfect its security interest.

**11. Improper use and Indemnity.** Buyer shall indemnify, defend, and hold Seller harmless from any claim, liability, damages, lawsuits, and costs (including attorney fees), whether for personal injury, property damage, patent, trademark or copyright infringement or any other claim, brought by or incurred by Buyer, Buyer's employees, or any other person, arising out of: (a) improper selection, improper application or other misuse of Products purchased by Buyer from Seller; (b) any act or omission, negligent or otherwise, of Buyer; (c) Seller's use of patterns, plans, drawings, or specifications furnished by Buyer to manufacture Product; or (d) Buyer's failure to comply with these terms and conditions. Seller shall not indemnify Buyer under any circumstance except as otherwise provided.

**12. Cancellations and Changes.** Orders shall not be subject to cancellation or change by Buyer for any reason, except with Seller's written consent and upon terms that will indemnify, defend and hold Seller harmless against all direct, incidental and consequential loss or damage. Seller may change product features, specifications, designs and availability with notice to Buyer.

**13. Limitation on Assignment.** Buyer may not assign its rights or obligations under this agreement without the prior written consent of Seller.

**14. Force Majeure.** Seller does not assume the risk and shall not be liable for delay or failure to perform any of Seller's obligations by reason of circumstances beyond the reasonable control of Seller (hereinafter "Events of Force Majeure"). Events of Force Majeure shall include without limitation: accidents, strikes or labor disputes, acts of any government or government agency, acts of nature, delays or failures in delivery from carriers or suppliers, shortages of materials, or any other cause beyond Seller's reasonable control.

**15. Waiver and Severability.** Failure to enforce any provision of this agreement will not waive that provision nor will any such failure prejudice Seller's right to enforce that provision in the future. Invalidation of any provision of this agreement by legislation or other rule of law shall not invalidate any other provision herein. The remaining provisions of this agreement will remain in full force and effect.

**16. Termination.** Seller may terminate this agreement for any reason and at any time by giving Buyer thirty (30) days written notice of termination. Seller may immediately terminate this agreement, in writing, if Buyer: (a) commits a breach of any provision of this agreement (b) appointments a trustee, receiver or custodian for all or any part of Buyer's property (c) files a petition for relief in bankruptcy on its own behalf, or by a third party (d) makes an assignment for the benefit of creditors, or (e) dissolves or liquidates all or a majority of its assets.

**17. Governing Law.** This agreement and the sale and delivery of all Products hereunder shall be deemed to have taken place in and shall be governed and construed in accordance with the laws of the State of Ohio, as applicable to contracts executed and wholly performed therein and without regard to conflicts of laws principles. Buyer irrevocably agrees and consents to the exclusive jurisdiction and venue of the courts of Cuyahoga County, Ohio with respect to any dispute, controversy or claim arising out of or relating to this agreement.

**18. Indemnity for Infringement of Intellectual Property Rights.** Seller shall have no liability for infringement of any patents, trademarks, copyrights, trade dress, trade secrets or similar rights except as provided in this Section. Seller will defend and indemnify Buyer against allegations of infringement of U.S. patents, U.S. trademarks, copyrights, trade dress and trade secrets ("Intellectual Property Rights"). Seller will defend at its expense and will pay the cost of any settlement or damages awarded in an action brought against Buyer based on an allegation that a Product sold pursuant to this Agreement infringes the Intellectual Property Rights of a third party. Seller's obligation to defend and indemnify Buyer is contingent on Buyer notifying Seller within ten (10) days after Buyer becomes aware of such allegations of infringement, and Seller having sole control over the defense of any allegations or actions including all negotiations for settlement or compromise. If a Product is subject to a claim that it infringes the Intellectual Property Rights of a third party, Seller may, at its sole expense and option, procure for Buyer the right to continue using the Product, replace or modify the Product so as to make it noninfringing, or offer to accept return of the Product and return the purchase price less a reasonable allowance for depreciation. Notwithstanding the foregoing, Seller shall have no liability for claims of infringement based on information provided by Buyer, or directed to Products delivered hereunder for which the designs are specified in whole or part by Buyer, or infringements resulting from the modification, combination or use in a system of any Product sold hereunder. The foregoing provisions of this Section shall constitute Seller's sole and exclusive liability and Buyer's sole and exclusive remedy for infringement of Intellectual Property Rights.

**19. Entire Agreement.** This agreement contains the entire agreement between the Buyer and Seller and constitutes the final, complete and exclusive expression of the terms of sale. All prior or contemporaneous written or oral agreements or negotiations with respect to the subject matter are herein merged.

**20. Compliance with Law, U. K. Bribery Act and U.S. Foreign Corrupt Practices Act.** Buyer agrees to comply with all applicable laws and regulations, including both those of the United Kingdom and the United States of America, and of the country or countries of the Territory in which Buyer may operate, including without limitation the U. K. Bribery Act, the U.S. Foreign Corrupt Practices Act ("FCPA") and the U.S. Anti-Kickback Act (the "Anti-Kickback Act"), and agrees to indemnify and hold harmless Seller from the consequences of any violation of such provisions by Buyer, its employees or agents. Buyer acknowledges that they are familiar with the provisions of the U. K. Bribery Act, the FCPA and the Anti-Kickback Act, and certifies that Buyer will adhere to the requirements thereof. In particular, Buyer represents and agrees that Buyer shall not make any payment or give anything of value, directly or indirectly to any governmental official, any foreign political party or official thereof, any candidate for foreign political office, or any commercial entity or person, for the purpose of influencing such person to purchase products or otherwise benefit the business of Seller.

# Parker's Motion & Control Technologies

**At Parker, we're guided by a relentless drive to help our customers become more productive and achieve higher levels of profitability by engineering the best systems for their requirements. It means looking at customer applications from many angles to find new ways to create value. Whatever the motion and control technology need, Parker has the experience, breadth of product and global reach to consistently deliver. No company knows more about motion and control technology than Parker. For further info call 1 800 C-Parker (1 800 272 7537)**

## Aerospace

### Key Markets

Aftermarket services
Commercial transports
Engines
General & business aviation
Helicopters
Launch vehicles
Military aircraft
Missiles
Power generation
Regional transports
Unmanned aerial vehicles

### Key Products

Control systems & actuation products
Engine systems & components
Fluid conveyance systems & components
Fluid metering, delivery & atomization devices
Fuel systems & components
Fuel tank inerting systems
Hydraulic systems & components
Thermal management
Wheels & brakes

## Climate Control

### Key Markets

Agriculture
Air conditioning
Construction Machinery
Food & beverage
Industrial machinery
Life sciences
Oil & gas
Precision cooling
Process
Refrigeration
Transportation

### Key Products

Accumulators
Advanced actuators
$CO_2$ controls
Electronic controllers
Filter driers
Hand shut-off valves
Heat exchangers
Hose & fittings
Pressure regulating valves
Refrigerant distributors
Safety relief valves
Smart pumps
Solenoid valves
Thermostatic expansion valves

## Electromechanical

### Key Markets

Aerospace
Factory automation
Life science & medical
Machine tools
Packaging machinery
Paper machinery
Plastics machinery & converting
Primary metals
Semiconductor & electronics
Textile
Wire & cable

### Key Products

AC/DC drives & systems
Electric actuators, gantry robots & slides
Electrohydrostatic actuation systems
Electromechanical actuation systems
Human machine interface
Linear motors
Stepper motors, servo motors, drives & controls
Structural extrusions

## Filtration

### Key Markets

Aerospace
Food & beverage
Industrial plant & equipment
Life sciences
Marine
Mobile equipment
Oil & gas
Power generation & renewable energy
Process
Transportation
Water Purification

### Key Products

Analytical gas generators
Compressed air filters & dryers
Engine air, coolant, fuel & oil filtration systems
Fluid condition monitoring systems
Hydraulic & lubrication filters
Hydrogen, nitrogen & zero air generators
Instrumentation filters
Membrane & fiber filters
Microfiltration
Sterile air filtration
Water desalination & purification filters & systems

## Fluid & Gas Handling

### Key Markets

Aerial lift
Agriculture
Bulk chemical handling
Construction machinery
Food & beverage
Fuel & gas delivery
Industrial machinery
Life sciences
Marine
Mining
Mobile
Oil & gas
Renewable energy
Transportation

### Key Products

Check valves
Connectors for low pressure fluid conveyance
Deep sea umbilicals
Diagnostic equipment
Hose couplings
Industrial hose
Mooring systems & power cables
PTFE hose & tubing
Quick couplings
Rubber & thermoplastic hose
Tube fittings & adapters
Tubing & plastic fittings

## Hydraulics

### Key Markets

Aerial lift
Agriculture
Alternative energy
Construction machinery
Forestry
Industrial machinery
Machine tools
Marine
Material handling
Mining
Oil & gas
Power generation
Refuse vehicles
Renewable energy
Truck hydraulics
Turf equipment

### Key Products

Accumulators
Cartridge valves
Electrohydraulic actuators
Human machine interfaces
Hybrid drives
Hydraulic cylinders
Hydraulic motors & pumps
Hydraulic systems
Hydraulic valves & controls
Hydrostatic steering
Integrated hydraulic circuits
Power take-offs
Power units
Rotary actuators
Sensors

## Pneumatics

### Key Markets

Aerospace
Conveyor & material handling
Factory automation
Life science & medical
Machine tools
Packaging machinery
Transportation & automotive

### Key Products

Air preparation
Brass fittings & valves
Manifolds
Pneumatic accessories
Pneumatic actuators & grippers
Pneumatic valves & controls
Quick disconnects
Rotary actuators
Rubber & thermoplastic hose & couplings
Structural extrusions
Thermoplastic tubing & fittings
Vacuum generators, cups & sensors

## Process Control

### Key Markets

Alternative fuels
Biopharmaceuticals
Chemical & refining
Food & beverage
Marine & shipbuilding
Medical & dental
Microelectronics
Nuclear Power
Offshore oil exploration
Oil & gas
Pharmaceuticals
Power generation
Pulp & paper
Steel
Water/wastewater

### Key Products

Analytical Instruments
Analytical sample conditioning products & systems
Chemical injection fittings & valves
Fluoropolymer chemical delivery fittings, valves & pumps
High purity gas delivery fittings, valves, regulators & digital flow controllers
Industrial mass flow meters/ controllers
Permanent no-weld tube fittings
Precision industrial regulators & flow controllers
Process control double block & bleeds
Process control fittings, valves, regulators & manifold valves

## Sealing & Shielding

### Key Markets

Aerospace
Chemical processing
Consumer
Fluid power
General industrial
Information technology
Life sciences
Microelectronics
Military
Oil & gas
Power generation
Renewable energy
Telecommunications
Transportation

### Key Products

Dynamic seals
Elastomeric o-rings
Electro-medical instrument design & assembly
EMI shielding
Extruded & precision-cut, fabricated elastomeric seals
High temperature metal seals
Homogeneous & inserted elastomeric shapes
Medical device fabrication & assembly
Metal & plastic retained composite seals
Shielded optical windows
Silicone tubing & extrusions
Thermal management
Vibration dampening

ENGINEERING YOUR SUCCESS.

***Visit us on the web***
***www.parker.com/cylinder***

01/17 / Catalog HY08-1314-1/NA

Parker Hannifin Corporation
**Cylinder Division**
500 South Wolf Road
Des Plaines, IL 60016 USA
phone (847) 298-2400
fax (800) 892-1008
www.parker.com/cylinder