BVA HYDRAULICS®

Industrial Hydraulic Equipment

The BVA Advantage

BVA Hydraulics was launched in 2003 and is centrally located in the United States in Kansas City, Missouri. BVA is one of the Shinn Fu of America Companies including; Hein-Werner, Omega Lift, Pro-Lift, Blackhawk, Porto-Power, Bone Creeper, Omega Lighting and Save Phace. Shinn Fu was founded in Taiwan in 1971 and began doing business in the United States in 1978. Shinn Fu has over 2,000 Employees worldwide with its headquarters in Taipei, Taiwan.

Confidence Built on Quality

ISO 9001

BVA products are manufactured through an International Quality Assurance System, ISO 9001 which involves consistent observation of administration, management, manufacturing, and production control. Under this system, the related operations are monitored on all aspects from the purchase order to the assembly line and through to shipping the order.

BVA Products comply with the following industry standards

ASME B30.1

The cylinders comply with load testing requirements and / or the safety factor for material yield strength while still functioning properly without oil leakage.

ANSI B40.1

BVA pressure gauges meet the criteria for grade A.

SAE 100

BVA hydraulic hoses comply with the Material Handling Institute's specification of minimum life cycles and minimum burst pressure rating.

BVA Limited Lifetime Warranty

BVA products are warranted to be free of defects in materials and workmanship. Any BVA product that does not conform to specification will be repaired or credited (at BVA's option) at BVA's expense for the life of the product. Contact BVA for disposition of this warranty.

This warranty does not cover ordinary wear and tear, abuse, misuse, alteration, or use of improper fluids or maintenance as determined by BVA and its authorized service centers. All electric motors, gas engines, batteries and other parts or materials sold with or part of BVA products but are separately warranted by another manufacturer, are covered by that manufacturer's warranty and not the BVA Lifetime Warranty. BVA shall not be liable for consequential or incidental damage or loss.

Repair Parts
We offer a large range of product replacement parts, please contact your BVA dealer for more details.

Contact Us
For technical support, call **1-888-332-6419.** For questions about your product, contact your local BVA dealer.

BVA Website
To view our most up-to-date catalog or view our new product, visit our website: **www.BVAhydraulics.com**

Model Number Index

Cylinders

H	6	HUD	16	HL	26	HULN	32	HC	36	HP	41
HU	10	HG	18	HF	28	HLNF	33	HDC	38	HT	42
HD	12	HDG	22	HLN	30	Accessories	34	HUC/HUDC	40	HPD	43

Pumps

P	Single Acting Hand Pumps	46	PAR	Rotary Air Pumps	49	PA	Double Acting Air Pumps	50	PG	Gas Engine Pumps	60
P	Double Acting Hand Pumps	46	PA	All Position Air Pumps	50	PE	1-Phase Electric Pumps	52	PD	Diesel Engine Pumps	60
P57	Foot Pumps	48	PA	Single Acting Air Pumps	50	PE	3-Phase Electric Pumps	56	PU	Universal Motor Pumps	63

Combo Kits

H	General Purpose Cylinder Combinations	64	HL	Low Profile Cylinder Combinations	65
HF	Flat Body Cylinder Combinations	64	HLN	Lock Nut Cylinder Combinations	65
HC	Hollow Hole Cylinder Combinations	65	HU	Aluminum Cylinder Combinations	65

Control Valves & Accessories

Flow Control Valves	66	Gauge Adapters	69	Solenoid Valves	70	Wireless Controller	71	Pressure Switch	72	Directional Control Valves	74
Manifolds	68	Hydraulic Oil	70	Hydraulic Couplers	71	External Pressure Adj	71	Hydraulic Hoses	72	Fittings	75
Pressure Gauges	69	Coupler Dust Cover	70	Foot Pedals	71	Manifold Blocks	72	Pump Mounted Valves	73		

Presses/Tools

Movable Head Shop Presses	77	Shop Press Guards	80	Oil Field Valve Seat Pullers	82	Hydraulic Gear Pullers	83
Fixed Head Shop Presses	78	Flange Spreaders	81	Aluminum Cylinder w/ Base/Needle Valve	82	Mechanical Gear Pullers	83
Shop Press Accessories	80	Duck Bill Spreaders	81	Hydraulic Bench Vise	82	Nut Splitters	83

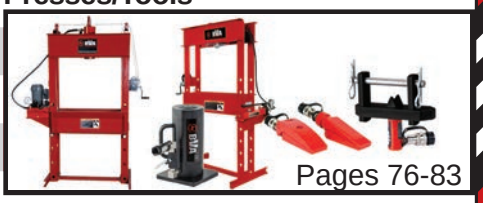

Maintenance Kits/Bottle Jacks

Maintenance Kits/Rail Cylinders	85	Manual Bottle Jacks	88	Mini Jacks	89
Lifting Bags	86	Air/Manual Bottle Jacks	88	OMNI All-Position Jacks	89
Lifting Bag Accessories	87	Toe Jacks	88	Orbital Jacks	89

Cross-Reference & Engineering

BVA Cross Reference Chart	90	Hydraulic Formula Reference	94
Safety Instructions	92		
Maintaining Your Equipment	94		

© Copyright 2016 SFA Companies
All rights reserved. Any copying or other use of the material in this catalog (text, illustrations, drawings, photos) without prior express written consent is prohibited. Information in this catalog is subject to change without prior notice.

Cylinder Matrix Chart

H	DC	30	06	T
1	*2*	*3*	*4*	*5*
Cylinder Type	*Cylinder Options*	*Cylinder Capacity*	*Cylinder Stroke*	*Suffix Code*

1 - Cylinder Type

H	Hydraulic Cylinder

2 - Cylinder Options

C	S/A - Hollow Hole
D	D/A - General Purpose
DC	D/A - Hollow Hole
DG	D/A - High Tonnage
F	S/A - Flat Body
G	S/A - Load Return High Tonnage
L	S/A - Low Profile
LN	S/A - Lock Nut
LNF	S/A - Lock Nut Low Profile
P	S/A - Pull
PD	Precision Double Acting
T	S/A - Threaded
U	S/A - Aluminum
UC	S/A - Aluminum Hollow Hole
UDC	D/A - Aluminum Hollow Hole
ULN	S/A - Aluminum Lock Nut

3 - Cylinder Capacity

02	2, 2.5 Tons	**75**	75 Tons
04	4 Tons	**100**	100 Tons
05	5 Tons	**150**	150 Tons
09	9 Tons	**160**	160 Tons
10	10 Tons	**200**	200 Tons
12	12 Tons	**250**	250 Tons
15	15 Tons	**300**	300 Tons
16	16 Tons	**400**	400 Tons
20	20 Tons	**500**	500 Tons
25	25 Tons	**600**	600 Tons
30	30 Tons	**700**	700 Tons
50	50 Tons	**800**	800 Tons
55	55 Tons	**1,000**	1,000 Tons
60	60 Tons	**1,500**	1,500 Tons
75	75 Tons		

4 - Cylinder Stroke

00	0.63"
01	1"
02	2"
04	4"
05	5"
06	6"
08	8"
10	10"
12	12"
13	13"
14	14"
18	18"
20	20"
24	24"
32	32"

5 - Suffix Code

T	BVA Factory Designation	**XT**	No Internal Threads, HC Series only
US	US Made Cylinder	**B**	Flat Body Cylinder Kit

Cylinder Accessories

See the assortment of accessories designed to work with our products.

pg 34

Safety Practices

80%

Good industry practice recommends not exceeding 80% of maximum rated capacities of all our products.

Safety Instructions

Visit our DO'S and DON'TS section to review the best methods of operation. Always be prepared.

pg 92

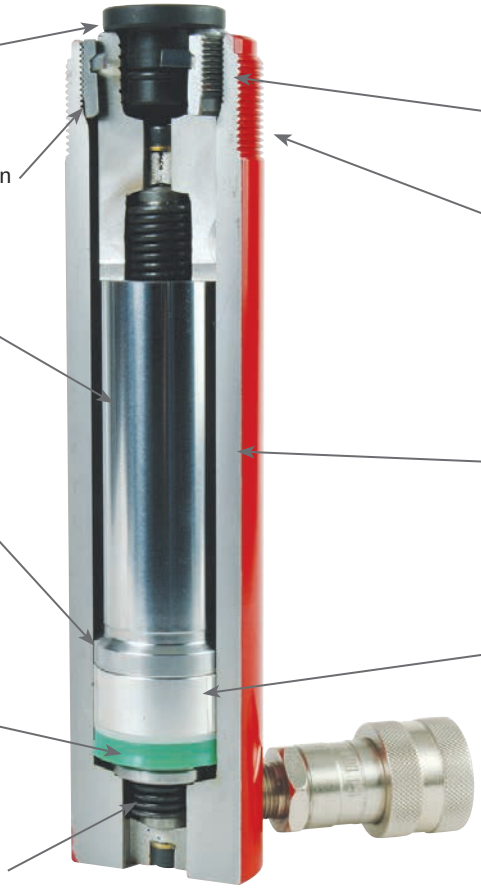

Cylinder Series	Cylinder Type	Max Capacity Range (tons)	Max Stroke Range (in)	Page Number / Reference Image
H	Single Acting Cylinders	2-100	0.63-14.25	6-9
HU	Aluminum Single Acting Cylinders	20-150	1.97-10.00	10-11
HD	Double Acting Cylinders	10-500	5.90-24.00	12-15
HUD	Aluminum Double Acting Cylinders	30-150	1.97-10.00	16-17
HG	High Tonnage Single Acting Cylinders	100-1500	1.97-11.81	18-21
HDG	High Tonnage Double Acting Cylinders	200-1500	6.00-24.00	22-25
HL	Low Profile Cylinders	10-100	1.5-2.44	26-27
HF	Flat Body Cylinders	5-150	0.24-0.63	28-29
HLN	Lock Nut Cylinders	55-300	1.97-11.81	30-31
HULN	Aluminum Lock Nut Cylinders	30-150	1.97-11.81	32
HLNF	Low Profile Lock Nut Cylinders	60-250	1.77-1.97	33
-	Cylinder Accessories	-	-	34-35
HC	Hollow Hole Cylinders	12-100	0.31-6.11	36-37
HDC	Double Acting Hollow Hole Cylinders	30-150	1.50-10.13	38-39
HUC	Aluminum Hollow Hole Cylinders	30-60	3.00-5.91	40
HUDC	Aluminum Double Acting Hollow Hole Cylinders	30-150	5.91-9.84	40
HP	Pull Cylinders	2.5-10	5.00-5.95	41
HT	Threaded Cylinders	4-20	5.07-9.96	42
HPD	Precision Double Acting Cylinders	9-16	1.77-3.14	43

Pump Section Page 44 ►

Single Acting Cylinders

H Series - General Purpose, Spring Return

H10010

H7513

H1514

H1501

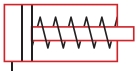

Capacity:

2 - 100 Tons*

Stroke:

0.63 - 14.25 Inches

Max. Operating Pressure:

10,000 psi

Min. - Max. Height:

1.63 - 32.99 Inches

CE

*** Larger Tonnages**

For tonnages that exceed 100, please refer to our HG Section

pg 18

Single Acting Cylinder H1506 in the collapsed position with CB15 cylinder base for safety.

Single Acting Cylinder H5513 in the collapsed position ready to lift a load

- Collar threads and base mounting holes for fixturing
- Hard chrome plated piston rod protects against corrosion and damage
- Polyurethane U-Cup seals provide a sure seal and long life
- Solid one piece alloy steel body
- One piece aluminum alloy bearing protects against cylinder wall damage
- CH38F high flow coupler with dust cap is standard on most cylinders**

80%

Safety Practices

Good industry practice recommends not exceeding 80% of maximum rated capacities of all our products.

HU Series – Aluminum Cylinders

Aluminum cylinders make a great lightweight alternative being up to 60% lighter than comparable steel models.

pg 10

1-888-332-6419
www.BVAhydraulics.com

Quick Selection Guide

Cylinder Capacity (ton)	Stroke (in)	Model Number	Collapsed Height (in)	Oil Capacity (in^3)	Weight (lbs)
2	3.07	H0203*	5.39	2.28	2.0
5	0.63	H0500**	1.63	0.69	1.9
	1.00	H0501	4.58	1.00	3.1
	3.07	H0503	6.65	3.07	3.2
	5.08	H0505	8.70	5.08	3.9
	7.09	H0507	10.71	7.09	4.7
	9.00	H0509	12.75	9.03	5.5
10	0.98	H1001	3.62	2.19	3.9
	2.01	H1002	4.84	4.50	5.0
	4.02	H1004	6.85	9.00	7.7
	5.94	H1006	9.84	13.30	9.5
	7.95	H1008	11.85	17.81	11.3
	9.96	H1010	13.86	22.31	13.1
	11.97	H1012	15.87	26.81	15.0
	14.02	H1014	17.72	31.40	16.7
15	0.98	H1501	4.88	3.07	6.9
	2.01	H1502	5.87	6.31	8.5
	3.98	H1504	7.87	12.49	11.1
	5.98	H1506	10.63	18.77	14.8
	7.99	H1508	12.64	25.08	17.3
	10.00	H1510	14.65	31.40	20.0
	12.01	H1512	16.65	37.71	22.5
	14.02	H1514	18.66	44.02	25.2
25	1.02	H2501	5.63	5.25	12.1
	2.01	H2502	6.61	10.35	14.0
	4.02	H2504	8.62	20.70	18.0
	6.10	H2506	10.71	31.41	22.2
	8.11	H2508	12.72	41.77	26.3
	10.12	H2510	14.72	52.12	30.3
	12.20	H2512	16.77	62.83	34.3
	14.25	H2514	18.74	73.39	38.3
30	8.27	H3008	15.24	53.67	40.7
55	2.01	H5502	6.93	21.97	33.0
	4.06	H5504	8.94	44.57	41.0
	6.26	H5506†	11.14	68.73	57.5
	10.25	H5510†	15.16	112.55	67.4
	13.27	H5513†	18.15	145.70	87.0
75	6.14	H7506†	11.22	98.85	74.0
	13.11	H7513†	19.37	211.07	122.0
100	2.01	H10002A†	8.62	41.34	66.0
	6.61	H10006†	14.06	136.03	127.0
	10.24	H10010†	17.68	210.74	153.0

See pages 8-9 for detailed specifications.

** H0203 load return.*
*** H0500 comes with CRZ14F coupler.*
† Cylinder is equipped with carrying handle.

H Series

Related Product: Gauges

Reduce the risk of overloading your product by using a gauge. A variety of graduations and types to suit any need.

pg 69

Cylinder Accessories

See the assortment of accessories designed to work with our products.

pg 34

Combo Kits

Most cylinders are available in easy to order kits: Cylinder, Gauge, Couplers, Hose and Pump.

pg 64

Safety Instructions

Visit our DO'S and DON'TS section to review the best methods of operation. Always be prepared.

pg 92

High-Flow Couplers

High-Flow Coupler: CH38F is included on all models (except where specified).

Optional Tilt-Saddles

Saddles tilt to a 5% maximum to adjust to the load. Match up these saddles with the following cylinders:

SDT05 ⟶ H05 Cylinders*

SDT10 ⟶ H10 Cylinders

SDT15 ⟶ H15 Cylinders

SDT25 ⟶ H25 Cylinders

SDT55 ⟶ H55, H75, H100 Cylinders

* Except the H0500 cylinder

pg 35

Single Acting Cylinders

H Series - Spring Return

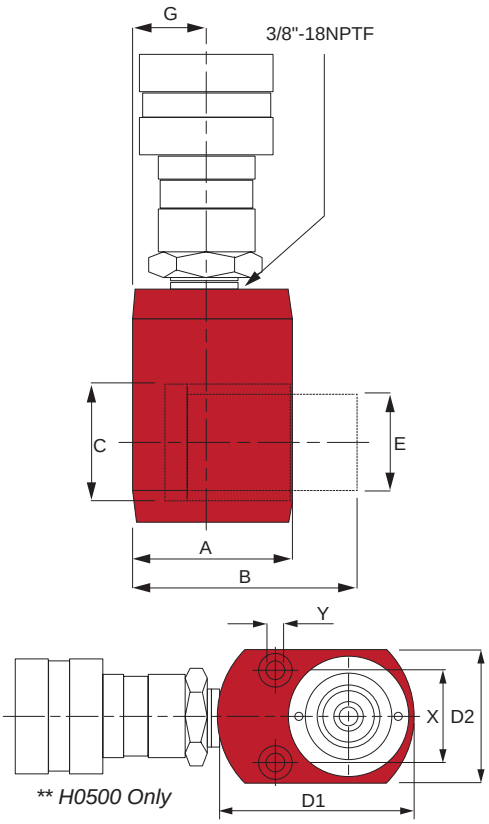

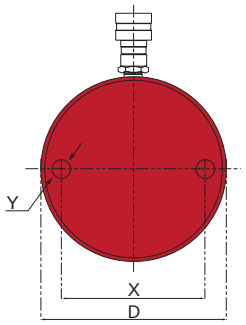

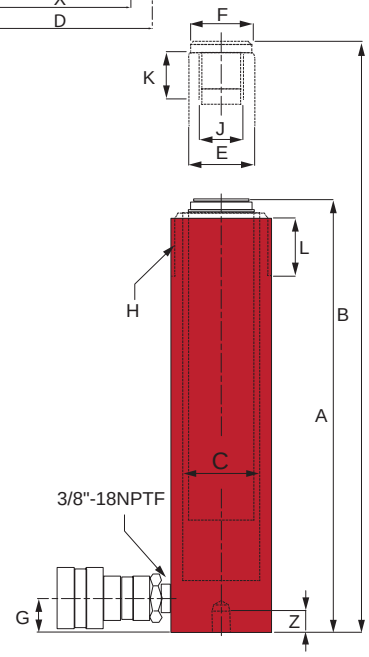

Cylinder Capacity (ton)	Stroke (in)	Model Number	Cylinder Effective Area (in^2)	Internal Pressure at Capacity (psi)	Oil Capacity (in^3)	Weight (lbs)
2	3.07	H0203*	0.76	5,263	2.28	2.0
5	0.63	H0500**	1.10	9,091	0.69	1.9
	1.00	H0501	1.00	10,000	1.00	3.1
	3.07	H0503	1.00	10,000	3.07	3.2
	5.08	H0505	1.00	10,000	5.08	3.9
	7.09	H0507	1.00	10,000	7.09	4.7
	9.00	H0509	1.00	10,000	9.03	5.5
10	0.98	H1001	2.24	8,928	2.19	3.9
	2.01	H1002	2.24	8,928	4.50	5.0
	4.02	H1004	2.24	8,928	9.00	7.7
	5.94	H1006	2.24	8,928	13.30	9.5
	7.95	H1008	2.24	8,928	17.81	11.3
	9.96	H1010	2.24	8,928	22.31	13.1
	11.97	H1012	2.24	8,928	26.81	15.0
	14.02	H1014	2.24	8,928	31.40	16.7
15	0.98	H1501	3.14	9,554	3.07	6.9
	2.01	H1502	3.14	9,554	6.31	8.5
	3.98	H1504	3.14	9,554	12.49	11.1
	5.98	H1506	3.14	9,554	18.77	14.8
	7.99	H1508	3.14	9,554	25.08	17.3
	10.00	H1510	3.14	9,554	31.40	20.0
	12.01	H1512	3.14	9,554	37.71	22.5
	14.02	H1514	3.14	9,554	44.02	25.2
25	1.02	H2501	5.15	9,708	5.25	12.1
	2.01	H2502	5.15	9,708	10.35	14.0
	4.02	H2504	5.15	9,708	20.70	18.0
	6.10	H2506	5.15	9,708	31.41	22.2
	8.11	H2508	5.15	9,708	41.77	26.3
	10.12	H2510	5.15	9,708	52.12	30.3
	12.20	H2512	5.15	9,708	62.83	34.3
	14.25	H2514	5.15	9,708	73.39	38.3
30	8.27	H3008	6.49	9,245	53.67	40.7
55	2.01	H5502	10.98	10,018	21.97	33.0
	4.06	H5504	10.98	10,018	44.57	41.0
	6.26	H5506†	10.98	10,018	68.73	57.5
	10.25	H5510†	10.98	10,018	112.55	67.4
	13.27	H5513†	10.98	10,018	145.70	87.0
75	6.14	H7506†	16.10	9,316	98.85	74.0
	13.11	H7513†	16.10	9,316	211.07	122.0
100	2.01	H10002A†	20.58	9,718	41.34	66.0
	6.61	H10006†	20.58	9,718	136.03	127.0
	10.24	H10010†	20.58	9,718	210.74	153.0

** H0203 load return.*
*** H0203 comes with CRZ14F coupler.*

† Cylinder is equipped with carrying handle.

Model Number	Collapsed Height A (in)	Extended Height B (in)	Cylinder Bore C (in)	Outside Dia. D (in)	Rod Dia. E (in)	Saddle Dia. F (in)	Base to Inlet Port G (in)	Collar Thread H (in)	Collar Thread Length L (in)	Rod Internal Thread J (in)	Rod Thread Length K (in)	Base Mounting Hole (in)		
												Bolt Circle X	Thread Y	Thread Depth Z
H0203*	5.39	8.46	1.00	1.31	0.87	1.00	0.46	1¼"-16	0.54	-	-	-	-	-
H0500**	1.63	2.26	1.18	2.37x1.59‡	0.98	-	0.75	-	-	-	-	1.10	-	-
H0501	4.58	5.58	1.13	1.50	1.00	0.98	0.79	1½"-16	1.10	¾"-16UNF	0.63	1.00	¼"-20UNC	0.55
H0503	6.65	9.72	1.13	1.50	1.00	0.98	0.79	1½"-16	1.10	¾"-16UNF	0.63	1.00	¼"-20UNC	0.55
H0505	8.70	13.78	1.13	1.50	1.00	0.98	0.79	1½"-16	1.10	¾"-16UNF	0.63	1.00	¼"-20UNC	0.55
H0507	10.71	17.80	1.13	1.50	1.00	0.98	0.79	1½"-16	1.10	¾"-16UNF	0.63	1.00	¼"-20UNC	0.55
H0509	12.75	21.75	1.12	1.50	1.00	0.98	0.79	1½"-16	1.10	¾"-16UNF	0.63	1.00	¼"-20UNC	0.55
H1001	3.62	4.60	1.69	2.26	1.49	-	0.77	2¼"-14	1.18	-	0.24	1.56	5/16"-18UNC	0.55
H1002	4.84	6.85	1.69	2.26	1.49	1.38	0.77	2¼"-14	1.18	1"-8UNC	0.79	1.56	5/16"-18UNC	0.55
H1004	6.85	10.87	1.69	2.26	1.49	1.38	0.77	2¼"-14	1.18	1"-8UNC	0.79	1.56	5/16"-18UNC	0.55
H1006	9.84	15.78	1.69	2.26	1.49	1.38	0.77	2¼"-14	1.18	1"-8UNC	0.79	1.56	5/16"-18UNC	0.55
H1008	11.85	19.80	1.69	2.26	1.49	1.38	0.77	2¼"-14	1.18	1"-8UNC	0.79	1.56	5/16"-18UNC	0.55
H1010	13.86	23.82	1.69	2.26	1.49	1.38	0.77	2¼"-14	1.18	1"-8UNC	0.79	1.56	5/16"-18UNC	0.55
H1012	15.87	27.84	1.69	2.26	1.49	1.38	0.77	2¼"-14	1.18	1"-8UNC	0.79	1.56	5/16"-18UNC	0.55
H1014	17.72	31.74	1.69	2.26	1.49	1.38	0.77	2¼"-14	1.18	1"-8UNC	0.79	1.56	5/16"-18UNC	0.55
H1501	4.88	5.86	2.00	2.75	1.63	1.50	0.77	2¾"-16	1.18	1"-8UNC	0.98	1.88	⅜"-16UNC	0.51
H1502	5.87	7.88	2.00	2.75	1.63	1.50	0.77	2¾"-16	1.18	1"-8UNC	0.98	1.88	⅜"-16UNC	0.51
H1504	7.87	11.85	2.00	2.75	1.63	1.50	0.77	2¾"-16	1.18	1"-8UNC	0.98	1.88	⅜"-16UNC	0.51
H1506	10.63	16.61	2.00	2.75	1.63	1.50	0.98	2¾"-16	1.18	1"-8UNC	0.98	1.88	⅜"-16UNC	0.51
H1508	12.64	20.63	2.00	2.75	1.63	1.50	0.98	2¾"-16	1.18	1"-8UNC	0.98	1.88	⅜"-16UNC	0.51
H1510	14.65	24.65	2.00	2.75	1.63	1.50	0.98	2¾"-16	1.18	1"-8UNC	0.98	1.88	⅜"-16UNC	0.51
H1512	16.65	28.66	2.00	2.75	1.63	1.50	0.98	2¾"-16	1.18	1"-8UNC	0.98	1.88	⅜"-16UNC	0.51
H1514	18.66	32.68	2.00	2.75	1.63	1.50	0.98	2¾"-16	1.18	1"-8UNC	0.98	1.88	⅜"-16UNC	0.51
H2501	5.63	6.65	2.56	3.35	2.24	1.97	0.98	3 5/16"-12	1.93	1½"-16	1.18	2.31	½"-13UNC	0.75
H2502	6.61	8.62	2.56	3.35	2.24	1.97	0.98	3 5/16"-12	1.93	1½"-16	1.18	2.31	½"-13UNC	0.75
H2504	8.62	12.64	2.56	3.35	2.24	1.97	0.98	3 5/16"-12	1.93	1½"-16	1.18	2.31	½"-13UNC	0.75
H2506	10.71	16.81	2.56	3.35	2.24	1.97	0.98	3 5/16"-12	1.93	1½"-16	1.18	2.31	½"-13UNC	0.75
H2508	12.72	20.83	2.56	3.35	2.24	1.97	0.98	3 5/16"-12	1.93	1½"-16	1.18	2.31	½"-13UNC	0.75
H2510	14.72	24.84	2.56	3.35	2.24	1.97	0.98	3 5/16"-12	1.93	1½"-16	1.18	2.31	½"-13UNC	0.75
H2512	16.77	28.97	2.56	3.35	2.24	1.97	0.98	3 5/16"-12	1.93	1½"-16	1.18	2.31	½"-13UNC	0.75
H2514	18.74	32.99	2.56	3.35	2.24	1.97	0.98	3 5/16"-12	1.93	1½"-16	1.18	2.31	½"-13UNC	0.75
H3008	15.24	23.51	2.87	4.00	2.24	1.97	1.97	3 5/16"-12	1.93	1½"-16	1.18	2.20	-	-
H5502	6.93	8.94	3.74	5.00	3.15	2.76	1.22	5"-12	2.17	-	-	3.75	½"-13UNC	0.75
H5504	8.94	13.00	3.74	5.00	3.15	2.76	1.22	5"-12	2.17	-	-	3.75	½"-13UNC	0.75
H5506†	11.14	17.40	3.74	5.00	3.15	2.76	1.22	5"-12	2.17	-	-	3.75	½"-13UNC	0.75
H5510†	15.16	25.41	3.74	5.00	3.15	2.76	1.22	5"-12	2.17	-	-	3.75	½"-13UNC	0.75
H5513†	18.15	31.42	3.74	5.00	3.15	2.76	1.22	5"-12	2.17	-	-	3.75	½"-13UNC	0.75
H7506†	11.22	18.36	4.53	5.79	3.74	2.76	1.18	5¾"-12	1.77	-	-	-	-	-
H7513†	19.37	32.48	4.53	5.79	3.74	2.76	1.18	5¾"-12	1.77	-	-	3.94	7/32"-10UNC	0.85
H10002A†	8.62	10.63	5.12	6.25	4.13	2.76	1.50	6¼"-12	2.17	-	-	-	-	-
H10006†	14.06	20.67	5.12	6.25	4.13	2.76	1.57	6¼"-12	1.77	-	-	5.50	¾"-10UNC	1.00
H10010†	17.68	27.92	5.12	6.25	4.13	2.76	1.57	6¼"-12	1.77	-	-	5.50	¾"-10UNC	1.00

** H0203 load return.*
*** H0500 comes with CRZ14F coupler.*

† Cylinder is equipped with carrying handle.
‡ Length x Width

Aluminum Single Acting Cylinders

HU Series - General Purpose, Spring Return, Lightweight

HU7506

HU5006

HU2006

HU7504

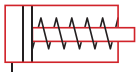

Capacity:

20 - 150 Tons

Stroke:

1.97 - 10.00 Inches

Max. Operating Pressure:

10,000 psi

Min. - Max. Height:

6.85 - 15.73 Inches

CE

- Lightweight aluminum alloy construction
- Up to 60% lighter than comparable tonnage steel cylinders
- Convenient carry handle on 50, 75 and 100 ton models
- Hard anodized aluminum rod provides extra protection against corrosion and wear
- Integral steel protective plate
- Maximum working pressure: 10,000 psi / 700 bar

Aluminum vs. Steel Cylinders

Aluminum cylinders provide a great alternative to the traditional steel cylinder in many applications. Being up to 60% lighter in weight, Aluminum cylinders are highly portable and reduce user fatigue and strain. However, due to the finite properties of Aluminum vs. Steel, these cylinders should NOT be used in high cycle applications. The BVA Aluminum cylinders are designed for a maximum safety rating of 5,000 cycles. Under normal lifting applications this should provide a long service life.

HU5006T

H5506

Aluminum Cylinders

- 60% lighter in weight than steel
- Highly portable and reduces user fatigue
- Not used for high cycle applications
- Under normal conditions, the maximum rated safety cycle life is 5,000 cycles
- Base of the cylinder contains a steel plate*

Steel Cylinders

- Much heavier than aluminum cylinders
- Low portability with heavier cylinders which creates user fatigue and strain
- Will out-perform aluminum cylinders in higher cycle applications
- Can exceed aluminum cylinders maximum safety cycle life of 5,000 cycles.

*The base of the cylinders contain a steel plate with mounting holes that are designed to protect the cylinder from damage and should NOT be used in fixturing applications and ONLY be used to attach larger base mounting plates for lifting stability. They are NOT designed to withstand the full ratings of the cylinders.

Safety Practices

80%

Good industry practice recommends not exceeding 80% of maximum rated capacities of all our products.

High-Flow Couplers

High-Flow Coupler: CH38F is included on all models (except where specified).

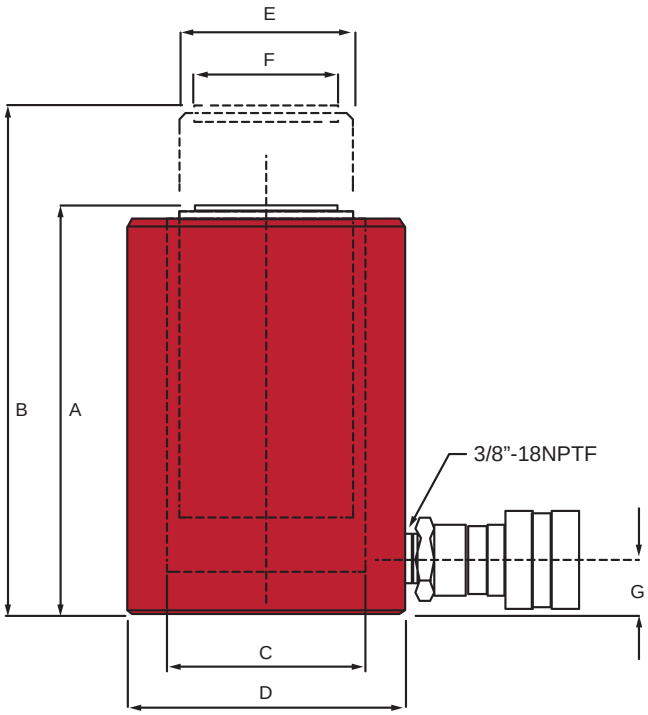

HU Series

Safety Instructions

Visit our DO’S and DON’TS section to review the best methods of operation. Always be prepared.

pg 92

Related Product: Gauges

Reduce the risk of overloading your product by using a gauge. A variety of graduation’s and types to suit any need.

pg 69

Related Product: Hoses

We offer a variety of hoses, fittings, lengths and materials.

pg 72

Cylinder Capacity (tons)	Stroke (in)	Model Number	Cylinder Effective Area (in²)	Internal Pressure at Capacity (psi)	Oil Capacity (in³)	Collapsed Height A (in)	Extended Height B (in)	Cylinder Bore Dia. C (in)	Outside Dia. D (in)	Rod Dia. E (in)	Saddle Dia. F (in)	Base to Inlet Port G (in)	Weight (lbs)
20	1.97	HU2002T	4.83	10,000	9.51	6.85	8.82	2.48	3.35	2.00	1.56	1.08	6.6
	3.94	HU2004T	4.83	10,000	19.02	8.82	12.76	2.48	3.35	2.00	1.56	1.08	8.1
	5.91	HU2006T	4.83	10,000	28.53	10.79	16.69	2.48	3.35	2.00	1.56	1.08	9.6
30	1.97	HU3002T	6.85	10,000	13.48	7.13	9.09	2.95	3.94	2.36	1.56	1.32	10.4
	3.94	HU3004T	6.85	10,000	26.96	9.09	13.03	2.95	3.94	2.36	1.56	1.32	12.0
	5.91	HU3006T	6.85	10,000	40.44	11.06	16.97	2.95	3.94	2.36	1.56	1.32	13.5
50	1.97	HU5002T	10.99	10,000	21.63	7.32	9.29	3.74	5.12	3.15	2.76	1.20	16.8
	3.94	HU5004T	10.99	10,000	43.25	9.29	13.23	3.74	5.12	3.15	2.76	1.20	22.6
	5.91	HU5006T	10.99	10,000	64.88	11.26	17.17	3.74	5.12	3.15	2.76	1.20	25.5
	7.87	HU5008T	10.99	10,000	86.51	13.23	21.10	3.74	5.12	3.15	2.76	1.20	27.1
	9.84	HU5010T	10.99	10,000	108.13	15.20	25.04	3.74	5.12	3.15	2.76	1.20	31.3
75	4.0	HU7504	15.00	10,000	60.10	8.73	12.73	4.37	6.50	3.88	3.00	1.50	29.0
	6.0	HU7506	15.00	10,000	90.20	10.73	16.73	4.37	6.50	3.88	3.00	1.50	35.0
100	2.0	HU10002	20.70	9,662	41.40	6.50	8.50	5.10	8.00	4.30	3.50	1.50	36.0
	4.0	HU10004	20.70	9,662	82.80	8.50	12.50	5.10	8.00	4.30	3.50	1.50	43.0
	6.0	HU10006	20.70	9,662	124.40	10.50	16.50	5.10	8.00	4.30	3.50	1.50	51.0
	10.0	HU10010	20.70	9,662	207.00	14.50	24.50	5.10	8.00	4.30	3.50	1.50	68.0
150	2.00	HU15002	30.70	9662	61.40	7.73	9.73	6.26	10.00	5.00	4.50	1.50	55.0
	4.00	HU15004	30.70	9662	122.70	9.73	13.73	6.26	10.00	5.00	4.50	1.50	65.0
	6.00	HU15006	30.70	9662	184.10	11.73	17.73	6.26	10.00	5.00	4.50	1.50	81.0
	10.00	HU15010	30.70	9662	306.80	15.73	25.73	6.26	10.00	5.00	4.50	1.50	110.0

Double Acting Cylinders

HD Series - General Purpose

HD20013

HD3008

Capacity:
10 - 500 Tons

Stroke:
5.90 - 24.00 Inches

Pressure:
10,000 psi

Min. - Max. Height:
10.56 - 60.13 Inches

CE

- Rod wiper seals out dirt and contamination
- High strength steel construction from gun drilled solid bar
- High flow 3/8″ NPTF female couplers
- One piece high grade alloy bearing for side load protection and long life
- Ideal for pushing and pulling
- Maximum working pressure: 10,000 psi / 700 bar
- Threaded cylinders, removable saddle, thicker cylinder walls
- Retract under hydraulic power for faster operation

80%

Safety Practices

Good industry practice recommends not exceeding 80% of maximum rated capacities of all our products.

Clevis and Tangs

Install a clevis or a tang to your double acting cylinder for a pulling application.

pg 34

HD cylinders can be used in pushing and pulling applications. In this photo, we see a HD2506 HD cylinder set up for a pull application using a Rod Clevis cylinder accessory ▶

HD20024

HD2506

With a variety of tonnage and sizes, you can apply our cylinders to a large variety of applications. Custom tonnages and stroke lengths are available upon request.

HD Series

Relief Valve

All double acting cylinders are equipped with a pressure relief valve located next to the retract port. These pressure relief valves help prevent cylinder over pressurization on the return port side of the cylinder.

Related Product: Gauges

Reduce the risk of overloading your product by using a gauge. A variety of graduations and types to suit any need.

pg 69

Cylinder Accessories

See the assortment of accessories designed to work with our products.

pg 34

Combo Kits

Most cylinders are available in easy to order kits: Cylinder, Gauge, Couplers, Hose and Pump.

pg 64

Safety Instructions

Visit our DO'S and DON'TS section to review the best methods of operation. Always be prepared.

pg 92

High-Flow Couplers

High-Flow Coupler: CH38F is included on all models (except where specified).

HUD Series – Aluminum Cylinders

Aluminum cylinders make a great lightweight alternative being up to 60% lighter than comparable steel models.

pg 16

Quick Selection Guide

Cylinder Capacity (tons)	Stroke (in)	Model Number	Collapsed Height (in)	Oil Capacity		Weight (lbs)
				Push (in^3)	Pull (in^3)	
10	10.04	HD1010	16.12	22.41	7.47	26.7
	11.97	HD1012	18.03	26.71	8.90	30.0
25	5.90	HD2506	10.56	30.35	15.81	24.8
30	8.15	HD3008	15.31	52.93	26.02	43.0
	14.49	HD3014	21.65	94.09	46.26	60.6
55	6.18	HD5506‡	13.03	67.93	19.74	70.5
	13.19	HD5513‡	20.04	144.94	42.11	104.0
	20.12	HD5520‡	28.86	221.09	64.24	146.2
75	6.10	HD7506‡	13.70	98.10	31.21	93.7
	13.11	HD7513‡	20.71	210.93	67.06	136.8
100	6.57	HD10006‡	14.06	135.23	62.98	138.6
	10.13	HD10010‡	17.67	208.30	97.10	169.2
	13.11	HD10013‡	20.63	269.66	125.58	193.6
	18.15	HD10018‡	27.05	373.31	173.86	248.3
200	6.00	HD20006	16.94	265.28	135.00	325.0
	13.00	HD20013	23.94	574.78	293.00	440.0
	24.02	HD20024	36.13	1061.00	528.00	616.0
300	6.00	HD30006	19.13	425.56	228.00	441.0
500	6.00	HD50006	22.75	678.92	378.00	953.0

See pages (pg.14-15) for detailed specifications.

Double Acting Cylinders

HD Series - General Purpose

Cylinder Accessories

See the assortment of accessories designed to work with our products.

pg 34

Related Product: Gauges

Reduce the risk of overloading your product by using a gauge. A variety of graduations and types to suit any need.

pg 69

Combo Kits

Most cylinders are available in easy to order kits: Cylinder, Gauge, Couplers, Hose and Pump.

pg 64

Safety Instructions

Visit our DO'S and DON'TS section to review the best methods of operation. Always be prepared.

pg 92

HD20013

HD7513

HD10018

HD3008

Cylinder Capacity (tons)	Stroke (in)	Model Number	Maximum Cylinder Capacity		Cylinder Effective Area		Oil Capacity		Weight (lbs)	Collapsed Height A (in)	Extended Height B (in)	Cylinder Bore Dia. C (in)
			Push (ton)	Pull (ton)	Push (in^2)	Pull (in^2)	Push (in^3)	Pull (in^3)				
10	10.04	HD1010	11.40	3.80	2.24	0.74	22.41	7.47	26.7	16.12	26.19	1.69
	11.97	HD1012	11.40	3.80	2.24	0.74	26.71	8.90	30.0	18.03	30.00	1.69
25	5.90	HD2506	25.70	13.39	5.14	2.68	30.35	15.81	24.8	10.56	16.46	2.56
30	8.15	HD3008	32.90	16.20	6.49	3.19	52.93	26.02	43.0	15.31	23.46	2.87
	14.49	HD3014	32.90	16.20	6.49	3.19	94.09	46.26	60.6	21.65	36.14	2.87
55	6.18	HD5506*	55.70	16.20	10.99	3.19	67.93	19.74	70.5	13.03	19.21	3.74
	13.19	HD5513*	55.70	16.20	10.99	3.19	144.94	42.11	104.0	20.04	33.23	3.74
	20.12	HD5520*	55.70	16.20	10.99	3.19	221.09	64.24	146.2	28.86	49.98	3.74
75	6.10	HD7506*	81.70	25.90	16.09	5.12	98.10	31.21	93.7	13.70	19.80	4.53
	13.11	HD7513*	81.70	25.90	16.09	5.12	210.93	67.06	136.8	20.71	33.82	4.53
100	6.57	HD10006*	104.40	48.60	20.57	9.58	135.23	62.98	138.6	14.06	20.63	5.12
	10.13	HD10010*	104.40	48.60	20.57	9.58	208.30	97.10	169.2	17.67	27.80	5.12
	13.11	HD10013*	104.40	48.60	20.57	9.58	269.66	125.58	193.6	20.63	33.74	5.12
	18.15	HD10018*	104.40	48.60	20.57	9.58	373.31	173.86	248.3	27.05	45.20	5.12
200	6.57	HD20006	221.00	112.50	44.21	22.50	265.28	135.00	325.0	16.94	22.94	7.50
	13.11	HD20013	221.00	112.50	44.21	22.50	574.78	293.00	440.0	23.94	36.94	7.50
	24.00	HD20024	221.00	112.50	44.21	22.50	1061.00	528.00	616.0	36.13	60.13	7.50
300	6.57	HD30006	354.60	190.00	70.93	38.00	425.56	228.00	441.0	19.13	25.13	9.50
500	6.57	HD50006	565.70	315.00	113.15	63.00	678.92	378.00	953.0	22.75	28.75	12.00

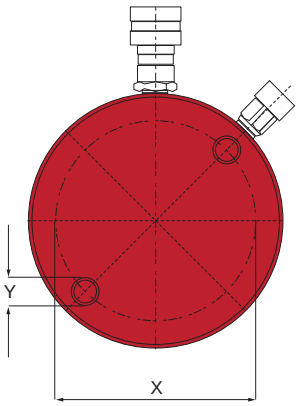

HD Series

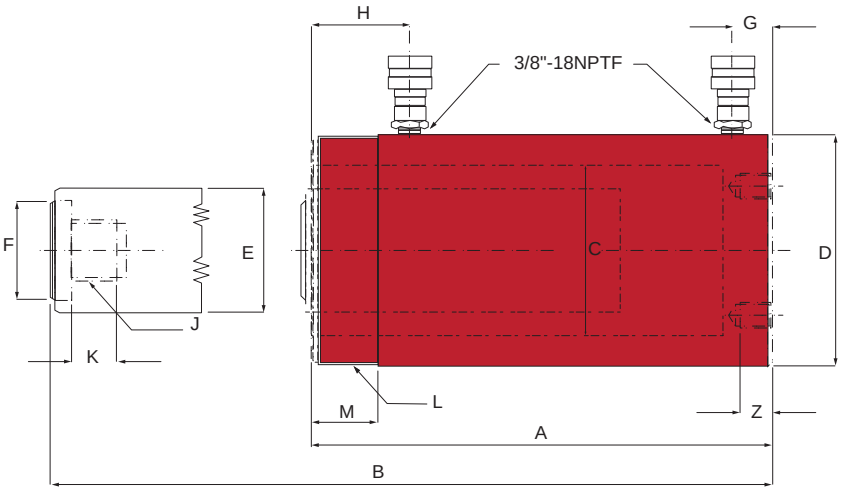

Safety Practices

80%

Good industry practice recommends not exceeding 80% of maximum rated capacities of all our products.

Relief Valve

All double acting cylinders are equipped with a pressure relief valve located next to the retract port. These pressure relief valves help prevent cylinder over pressurization on the return port side of the cylinder.

High-Flow Couplers

High-Flow Coupler: CH38F is included on all models (except where specified).

Model Number	Outside Dia. D (in)	Rod Dia. E (in)	Saddle Dia. F (in)	Base to Adv. Port G (in)	Top to Return Port H (in)	Rod Internal Thread J (in)	Rod Thread Length K (in)	Collar Thread L (in)	Collar Thread Length M (in)	Base Mounting Hole		
										Bolt Circle X (in)	Thread Y (in)	Thread Depth Z (in)
HD1010	2.87	1.38	1.38	1.42	2.09	1”-8	0.98	2¼”-14	1.02	1.30	5⁄16”-18	0.60
HD1012	2.87	1.37	1.38	1.42	2.09	1”-8	0.98	2¼”-14	1.02	1.30	5⁄16”-18	0.60
HD2506	3.62	1.77	1.50	0.98	1.93	1’-8	1.18	3 5⁄16”-12	0.98	2.30	½”-13	0.70
HD3008	3.98	2.13	1.97	1.65	2.91	1½”-16	0.98	3 5⁄16”-12	1.93	2.20	½”-13	0.70
HD3014	3.98	2.13	1.97	1.65	2.91	1½”-16	0.98	3 5⁄16”-12	1.93	2.20	½”-13	0.70
HD5506*	5.00	3.14	2.76	1.14	2.87	1”-12	0.98	5”-12	1.73	3.70	½”-13	0.70
HD5513*	5.00	3.14	2.76	1.14	2.87	1”-12	0.98	5”-12	1.73	3.70	½”-13	0.70
HD5520*	5.00	3.14	2.76	1.14	2.87	1”-12	0.98	5”-12	1.73	3.70	½”-13	0.70
HD7506*	5.75	3.75	2.76	1.18	2.80	1”-12	1.50	5¾”-12	1.50	4.00	¾”-10	0.90
HD7513*	5.75	3.75	2.76	1.18	2.80	1”-12	1.50	5¾”-12	1.50	4.00	¾”-10	0.90
HD10006*	6.97	3.75	2.95	1.22	2.95	1¾”-12	1.38	6⅞”-12	1.97	5.47	¾”-10	0.98
HD10010*	6.97	3.74	2.95	1.22	2.95	1¾”-12	1.50	6⅞”-12	2.01	5.50	¾”-10	0.98
HD10013*	6.97	3.75	2.95	1.22	2.95	1¾”-12	1.38	6⅞”-12	1.97	5.47	¾”-10	0.98
HD10018*	6.97	3.75	2.95	1.50	2.95	1¾”-12	1.38	6⅞”-12	1.97	5.47	¾”-10	0.98
HD20006	9.75	5.25	5.25	2.25	3.81	-	-	-	-	5.00	1-8	1.00
HD20013	9.75	5.25	5.25	2.25	3.81	2½”-12	2.50	9¾”-12	2.13	5.00	1-8	1.00
HD20024	9.75	5.25	5.25	3.38	4.00	2½”-12	2.50	9¾”-12	2.13	5.00	1-8	1.00
HD30006	12.25	6.50	6.50	3.50	4.50	2½”-12	3.25	12¼”-12	2.31	6.25	1¼-7	1.75
HD50006	15.63	8.00	8.00	4.75	6.00	3¼”-12	4.25	15 5⁄16”-8	3.13	8.00	1¾-5	2.12

** 55-100 ton cylinders are equipped with carrying handles.*

Aluminum Double Acting Cylinders

HUD Series - General Purpose, Lightweight

HUD15006

HUD7513

Capacity:

30 - 150 Tons

Stroke:

2 - 13 Inches

Max. Operating Pressure:

10,000 psi

Min. - Max. Height:

8.30 - 33.80 Inches

Aluminum vs. Steel Cylinders

Aluminum cylinders provide a great alternative to the traditional steel cylinder in multiple applications. Being up to 60% lighter in weight, Aluminum cylinders are highly portable and reduce user fatigue and strain. However, due to the finite properties of Aluminum vs. Steel, these cylinders should NOT be used in high cycle applications. The BVA Aluminum cylinders are designed for a maximum safety rating of 5,000 cycles. Under normal lifting applications this should provide a long service life.

HUD7513

HD7513

Aluminum Cylinders

- 60% lighter in weight than steel
- Highly portable and reduces user fatigue
- Not used for high cycle applications
- Under normal conditions, the maximum rated safety cycle life is 5,000 cycles
- Base of the cylinder contains a steel plate*

Steel Cylinders

- Much heavier than aluminum cylinders
- Low portability with heavier cylinders which creates user fatigue and strain
- Will out-perform aluminum cylinders in higher cycle applications
- Can exceed aluminums maximum safety cycle life of 5,000 cycles.

Cylinder Capacity (tons)	Stroke (in)	Model Number	Maximum Cylinder Capacity (ton)		Cylinder Effective Area (in²)		Oil Capacity (in³)		Weight (lbs)
			Push	Pull	Push	Pull	Push	Pull	
30	6.00	HUD3006	30.00	12.57	6.50	2.50	39.00	15.00	18.0
	8.00	HUD3008	30.00	12.57	6.50	2.50	51.90	18.00	26.0
	13.00	HUD3013	30.00	12.57	6.00	2.50	90.90	32.41	35.0
50	6.00	HUD5006	50.00	13.50	10.30	2.70	61.80	16.00	28.0
	8.00	HUD5008	50.00	13.50	10.30	2.70	88.30	22.00	36.0
	13.00	HUD5013	50.00	13.58	10.30	2.70	143.50	35.80	48.0
75	6.00	HUD7506	75.00	27.00	15.00	5.41	90.20	19.40	41.0
	8.00	HUD7508	75.00	27.00	15.00	5.41	121.00	43.30	50.0
	13.00	HUD7513	75.00	27.00	15.00	5.41	195.40	70.40	62.0
100	2.00	HUD10002	100.00	23.75	20.60	4.75	41.20	9.40	42.0
	6.00	HUD10006	100.00	23.75	20.60	4.75	123.70	28.30	57.0
	13.00	HUD10013	100.00	23.75	20.60	4.75	268.10	61.40	90.0
150	6.00	HUD15006	100.00	34.60	30.70	6.90	184.10	41.40	87.0
	13.00	HUD15013	100.00	34.60	30.70	6.90	378.80	90.10	122.0

* The base of the cylinders contain a Steel plate with mounting holes and is designed to protect the cylinder from damage and should NOT be used in fixturing applications and ONLY be used to attach a larger base mounting plate for lifting stability. They are NOT designed to withstand the full rating of the cylinder.

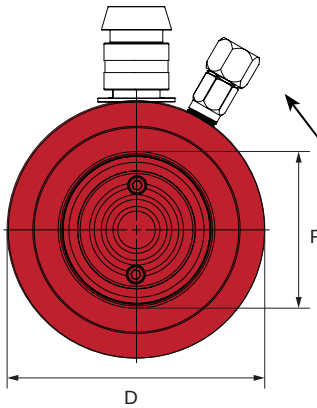

Relief Valve

All double acting cylinders are equipped with a pressure relief valve located next to the retract port. These pressure relief valves help prevent cylinder over pressurization on the return port side of the cylinder.

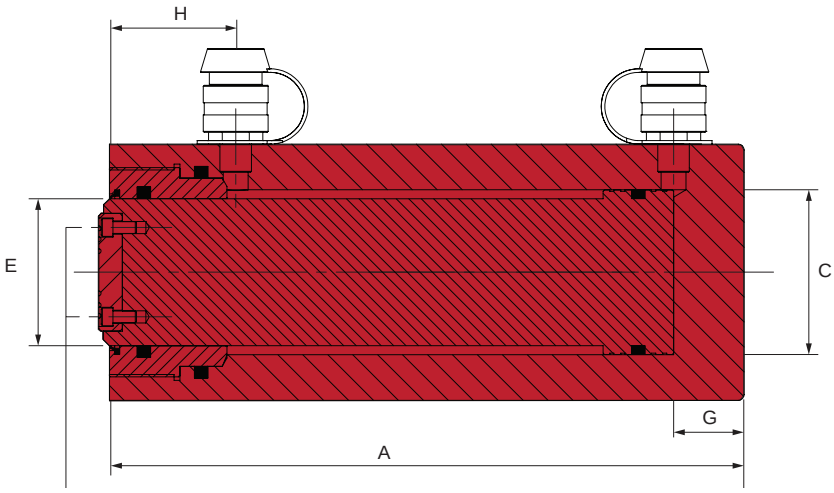

HUD Series

Safety Instructions

Visit our DO'S and DON'TS section to review the best methods of operation. Always be prepared.

pg 92

Related Product: Gauges

Reduce the risk of overloading your product by using a gauge. A variety of graduations and types to suit any need.

pg 69

Safety Practices

Good industry practice recommends not exceeding 80% of maximum rated capacities of all our products.

High-Flow Couplers

High-Flow Coupler: CH38F is included on all models (except where specified).

- Lightweight aluminum alloy construction
- Up to 60% lighter than comparable tonnage steel cylinders
- Convenient carry handle on 50, 75, 100 and 150 ton models
- Hard anodized aluminum rod provides extra protection against corrosion and wear
- Steel protective plate on cylinder base
- Maximum working pressure: 10,000 psi / 700 bar

Model Number	Collapsed Height A (in)	Extended Height B (in)	Cylinder Bore Dia. C (in)	Outside Diameter D (in)	Rod Dia. E (in)	Saddle Diameter F (in)	Base To Advance Port G (in)	Top To Retract Port H (in)
HUD3006	11.80	17.80	2.88	4.50	2.88	2.00	1.50	2.00
HUD3008	13.80	21.80	2.88	4.50	2.88	2.00	1.50	2.00
HUD3013	19.30	32.30	2.88	4.50	2.88	2.00	1.50	2.00
HUD5006	11.80	17.80	3.63	5.50	3.13	2.50	1.50	2.50
HUD5008	13.80	21.80	3.63	5.50	3.13	2.50	1.50	2.50
HUD5013	19.30	32.30	3.63	5.50	3.13	2.50	1.50	2.50
HUD7506	12.30	18.30	4.38	6.50	3.50	3.00	1.50	2.50
HUD7508	14.30	20.30	4.38	6.50	3.50	3.00	1.50	2.50
HUD7513	19.30	32.30	4.38	6.50	3.50	3.00	1.50	2.50
HUD10002	8.30	10.30	5.13	8.00	4.50	3.50	1.50	2.50
HUD10006	12.30	18.30	5.13	8.00	4.50	3.50	1.50	2.50
HUD10013	19.30	32.30	5.13	8.00	4.50	3.50	1.50	2.50
HUD15006	14.30	20.30	6.26	10.00	5.50	4.50	2.00	3.00
HUD15013	20.80	33.80	6.26	10.00	5.50	4.50	2.00	3.00

NOTE: The base of the aluminum cylinders contain a Steel plate with mounting holes and is designed to protect the cylinder from damage and should NOT be used in fixturing applications and ONLY be used to attach larger base mounting plates for lifting stability. The threads are NOT designed to withstand the full rating of the cylinder.

High Tonnage Single Acting Cylinders

HG series - Heavy Lifting, Load Return

HG10004 *HG15006* *HG20002*

Capacity:

100-1,500 Tons

Stroke:

1.97 - 11.81 Inches

Max. Operating Pressure:

10,000 psi

Min. - Max. Height:

7.17 - 43.86 Inches

CE

Related Product: Hoses

We offer a variety of hoses, fittings, lengths and materials.

pg 72

Flow Control Valves

Control the speed of your cylinder by adding a flow control valve.

pg 66

- Cylinders are burnish rolled creating a smoother surface than honing.
- Rod wiper seals out dirt and contamination
- Base mounting holes on all models
- High strength steel construction from gun drilled solid bar providing extra combine strength for high tonnage applications
- High flow 3/8” NPTF coupler
- Polyurethane cup seal provides optimum performance
- Industrial hard chrome plated rod helps prevent rust and corrosion
- Maximum working pressure: 10,000 psi / 700 bar
- Custom sizes are available upon request
- Load Return

Gas/Diesel Engine Pumps

These HG cylinders pair up well with a Gas or Diesel Engine pumps. We offer a variety of different flow rates, motor sizes and reservoir sizes. Contact your local BVA dealer for more details.

PG70M3N05

- Will provide 10,000 psi. hydraulic force at remote locations
- Industrial grade 5.5 or 10.2 hp Honda gas engine or 7.3 hp HATZ diesel engine.
- Ideal for applications where electricity isn’t easily accessible.
- Two speed pump designed for rapid cylinder advance
- Gas pump features a sturdy protective roll cage for use in the toughest environments
- Electric start standard on PD80 and optional on PG90

Electric Motor Pumps

These HG cylinders pair up well with Electric Motor pumps. We offer a variety of different flow rates and motor sizes. Contact your local BVA dealer for more details.

PE50W3N03A

- Meets OSHA regulations for sound (80dBA)
- Two speed pump designed for rapid cylinder advance
- Internal filter screens contamination to prevent pump damage
- All units are wired as 120 VAC 60 Hz; Optional wiring includes 50 Hz motors and 240VAC 60Hz
- 100% Duty Cycle TEFC motors
- All hand pendants are wired at 24VAC for safety
- Full load starting capability

HG Series

Quick Reference Guide

Cylinder Capacity (tons)	Stroke (in)	Model Number	Collapsed Height (in)	Oil Capacity (in^3)	Weight (lbs)
100	1.97	HG10002	7.17	40.50	61.0
	3.94	HG10004	9.13	81.00	74.0
	5.91	HG10006	11.10	121.50	87.0
	7.87	HG10008	13.07	161.99	100.0
	9.84	HG10010	15.04	202.49	114.0
	11.81	HG10012	17.01	242.99	127.0
150	1.97	HG15002	7.72	59.89	102.0
	3.94	HG15004	9.69	119.78	122.0
	5.91	HG15006	11.65	181.75	142.0
	7.87	HG15008	13.62	239.57	162.0
	9.84	HG15010	15.59	299.46	181.0
	11.81	HG15012	17.56	359.35	202.0
200	1.97	HG20002	8.50	80.68	121.0
	5.91	HG20006	12.44	243.40	201.0
	7.87	HG20008	14.41	322.73	242.0
	11.81	HG20012	18.35	486.79	322.0
300	1.97	HG30002	12.28	139.19	406.0
	5.91	HG30006	16.22	417.56	511.0
	11.81	HG30012	22.13	835.11	668.0
400	1.97	HG40002	14.74	170.84	595.0
	5.91	HG40006	18.68	512.51	728.0
	12.01	HG40012	24.61	1042.10	928.0
500	1.97	HG50002	16.50	222.92	884.0
	5.91	HG50006	20.43	668.77	1058.0
	11.81	HG50012	26.34	1338.00	1321.0
600	1.97	HG60002	16.89	260.97	1045.0
	5.91	HG60006	20.83	782.90	1246.0
	9.84	HG60010	19.88	1408.93	948.0
	11.81	HG60012	26.73	1566.00	1545.0
800	1.97	HG80002	18.66	358.91	1634.0
	5.91	HG80006	22.60	1077.00	1914.0
	11.81	HG80012	28.50	2153.00	2332.0
1000	1.97	HG100002	22.20	447.23	2341.0
	5.91	HG100006	26.14	1342.00	2674.0
	11.81	HG100012	32.05	2683.00	3172.0
1100-1500	For these higher tonnages, contact your local BVA dealer for pricing and details				

See next pages (pg.20-21) to view more detail stats on High Tonnage Single Acting Cylinders.

Safety Practices

80%

Good industry practice recommends not exceeding 80% of maximum rated capacities of all our products.

Related Product: Gauges

Reduce the risk of overloading your product by using a gauge. A variety of graduations and types to suit any need.

pg 69

Safety Instructions

Visit our DO'S and DON'TS section to review the best methods of operation. Always be prepared.

pg 92

High-Flow Couplers

High-Flow Coupler: CH38F is included on all models (except where specified).

Optional Tilt-Saddles

Saddles tilt to a 5% maximum to adjust to the load. View our cylinder accessories page to figure out what saddle best fits these cylinders.

pg 35

High Tonnage Single Acting Cylinders

HG Series - Heavy Lifting, Load Return

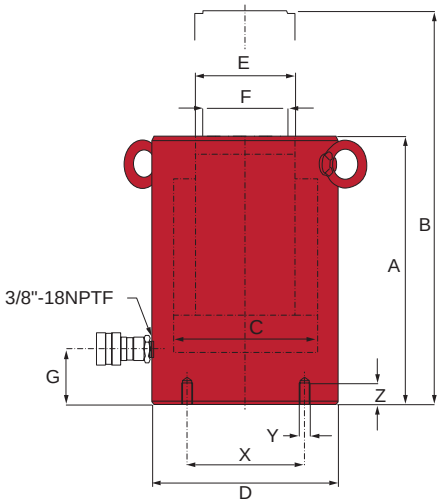

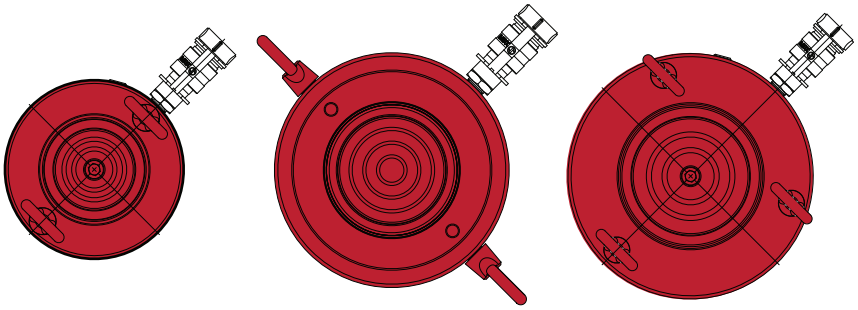

HG100 *HG150* *HG200*

Cylinder Capacity (tons)	Stroke (in)	Model Number	Maximum Cylinder Capacity (ton)	Cylinder Effective Area (in^2)	Oil Capacity (in^3)	Weight (lbs)
100	1.97	HG10002	102.86	20.57	40.50	61.0
	3.94	HG10004	102.86	20.57	81.00	74.0
	5.91	HG10006	102.86	20.57	121.50	87.0
	7.87	HG10008	102.86	20.57	161.99	100.0
	9.84	HG10010	102.86	20.57	202.49	114.0
	11.81	HG10012	102.86	20.57	242.99	127.0
150	1.97	HG15002	152.11	30.43	59.89	102.0
	3.94	HG15004	152.11	30.43	119.78	122.0
	5.91	HG15006	153.90	30.78	181.75	142.0
	7.87	HG15008	152.11	30.43	239.57	162.0
	9.84	HG15010	152.11	30.43	299.46	181.0
	11.81	HG15012	152.11	30.43	359.35	202.0
200	1.97	HG20002	204.92	40.99	80.68	121.0
	5.91	HG20006	206.10	41.22	243.40	201.0
	7.87	HG20008	204.92	40.99	322.73	242.0
	11.81	HG20012	206.10	41.22	486.79	322.0
300	1.97	HG30002	353.60	70.71	139.19	406.0
	5.91	HG30006	353.60	70.71	417.56	511.0
	11.81	HG30012	353.60	70.71	835.11	668.0
400	1.97	HG40002	433.90	86.78	170.84	595.0
	5.91	HG40006	433.90	86.78	512.51	728.0
	12.01	HG40012	433.90	86.78	1042.10	928.0
500	1.97	HG50002	566.30	113.25	222.93	884.0
	5.91	HG50006	566.30	113.25	668.78	1058.0
	11.81	HG50012	566.30	113.25	1337.56	1321.0
600	1.97	HG60002	662.90	132.57	260.97	1045.0
	5.91	HG60006	662.90	132.57	782.90	1246.0
	9.84	HG60010	670.90	134.18	1408.93	948.0
	11.81	HG60012	662.90	132.57	1566.00	1545.0
800	1.97	HG80002	911.60	182.32	358.91	1634.0
	5.91	HG80006	911.60	182.32	1077.00	1914.0
	11.81	HG80012	911.60	182.32	2153.00	2332.0
1000	1.97	HG100002	1136.00	227.19	447.23	2341.0
	5.91	HG100006	1136.00	227.19	1342.00	2674.0
	11.81	HG100012	1136.00	227.19	2683.00	3172.0

Safety Instructions

Visit our DO'S and DON'TS section to review the best methods of operation. Always be prepared.

pg 92

High-Flow Couplers

High-Flow Coupler: CH38F is included on all models (except where specified).

Related Product: Gauges

Reduce the risk of overloading your product by using a gauge. A variety of graduations and types to suit any need.

pg 69

Optional Tilt-Saddles

Saddles tilt to a 5% maximum to adjust to the load. View our cylinder accessories page to figure out what saddle best fits these cylinders.

pg 35

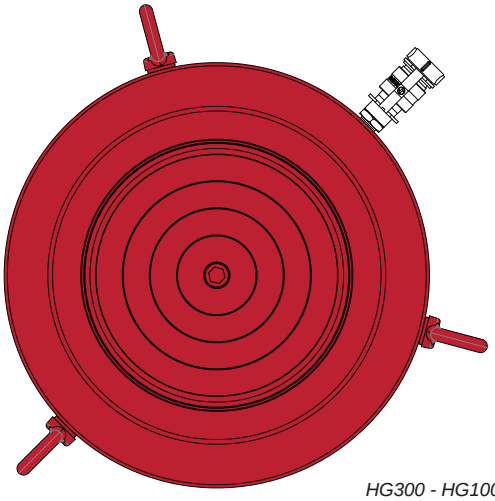

HG300 - HG1000

HG Series

80%

Safety Practices

Good industry practice recommends not exceeding 80% of maximum rated capacities of all our products.

Model Number	Collapsed Height A (in)	Extended Height B (in)	Cylinder Bore Dia. C (in)	Outside Dia. D (in)	Rod Dia. E (in)	Saddle Dia. F (in)	Base To Adv. Port G (in)	Base Mounting Holes		
								Bolt Circle (in) X	Thread Size (mm)	Thread Depth (in) Z
HG10002	7.17	9.14	5.12	3.50	3.74	2.95	2.13	3.74	M12	0.87
HG10004	9.13	13.07	5.12	3.50	3.74	2.95	2.13	3.74	M12	0.87
HG10006	11.10	17.01	5.12	3.50	3.74	2.95	2.13	3.74	M12	0.87
HG10008	13.07	20.94	5.12	3.50	3.74	2.95	2.13	3.74	M12	0.87
HG10010	15.04	24.88	5.12	3.50	3.74	2.95	2.13	3.74	M12	0.87
HG10012	17.01	28.82	5.12	3.50	3.74	2.95	2.13	3.74	M12	0.87
HG15002	7.72	9.69	6.22	8.07	4.33	3.70	2.40	5.12	M12	0.87
HG15004	9.69	13.62	6.22	8.07	4.33	3.70	2.40	5.12	M12	0.87
HG15006	11.65	17.56	6.22	8.07	4.33	3.70	2.40	5.12	M12	0.87
HG15008	13.62	21.50	6.22	8.07	4.33	3.70	2.40	5.12	M12	0.87
HG15010	15.59	25.43	6.22	8.07	4.33	3.70	2.40	5.12	M12	0.87
HG15012	17.56	29.37	6.22	8.07	4.33	3.70	2.40	5.12	M12	0.87
HG20002	8.50	10.47	7.22	9.25	5.31	4.45	2.62	6.50	M12	0.80
HG20006	12.44	18.35	7.24	9.25	5.31	4.45	2.62	6.50	M12	0.80
HG20008	14.41	22.28	7.22	9.25	5.31	4.45	2.62	6.50	M12	0.80
HG20012	18.35	30.16	7.24	9.25	5.31	4.45	2.62	6.50	M12	0.80
HG30002	12.28	14.25	9.49	12.20	7.76	6.97	3.98	7.09	M16	1.42
HG30006	16.22	22.13	9.49	12.20	7.76	6.97	3.98	7.09	M16	1.42
HG30012	22.13	33.94	9.49	12.20	7.76	6.97	3.98	7.09	M16	1.42
HG40002	14.74	16.71	10.51	13.78	8.50	7.72	4.49	8.07	M16	1.42
HG40006	18.68	24.59	10.51	13.78	8.50	7.72	4.49	8.07	M16	1.42
HG40012	24.61	36.61	10.51	13.78	8.50	7.72	4.49	8.07	M16	1.42
HG50002	16.50	18.46	12.01	15.75	9.76	8.98	4.49	9.84	M24	1.50
HG50006	20.43	26.34	12.01	15.75	9.76	8.98	4.49	9.84	M24	1.50
HG50012	26.34	38.15	12.01	15.75	9.76	8.98	4.49	9.84	M24	1.50
HG60002	16.89	18.86	12.99	16.93	10.51	9.72	4.49	10.83	M24	1.50
HG60006	20.83	26.73	12.99	16.93	10.51	9.72	4.49	10.83	M24	1.50
HG60010	18.00	28.50	13.07	17.05	9.00	7.87	4.49	10.83	M24	1.50
HG60012	26.73	38.54	12.99	16.93	10.51	9.72	4.49	10.83	M24	1.50
HG80002	18.66	20.63	15.24	19.88	12.48	11.69	5.87	12.99	M24	1.50
HG80006	22.60	28.50	15.24	19.88	12.48	11.69	5.87	12.99	M24	1.50
HG80012	28.50	40.31	15.24	19.88	12.48	11.69	5.87	12.99	M24	1.50
HG100002	22.20	24.17	17.01	22.05	13.50	12.72	6.85	14.76	M24	1.50
HG100006	26.14	32.05	17.01	22.05	13.50	12.72	6.85	14.76	M24	1.50
HG100012	32.05	43.86	17.01	22.05	13.50	12.72	6.85	14.76	M24	1.50

High Tonnage Double Acting Cylinders

HDG Series - Heavy Lifting

Capacity:

100-1,500 Tons

Stroke:

1.97 - 11.81 Inches

Max. Operating Pressure:

10,000 psi

Min. - Max. Height:

7.17 - 43.80 Inches

CE

Safety Instructions

Visit our DO'S and DON'TS section to review the best methods of operation. Always be prepared.

pg 92

Related Product: Hoses

We offer a variety of hoses, fittings, lengths and materials.

pg 72

Flow Control Valves

Control the speed of your cylinder by adding a flow control valve.

pg 66

- Cylinders are burnish rolled creating a smoother finish than honing
- Industrial hard chrome plated rod prevents scratching and corrosion
- Base mounting holes standard on all models
- Rod wiper seals out dirt and contamination
- High strength steel construction from gun drilled solid bar
- High flow 3/8″ NPTF couplers
- Maximum working pressure: 10,000 psi / 700 bar
- Custom sizes are available upon request

Gas/Diesel Engine Pumps

These HDG cylinders pair up well with a Gas or Diesel Engine pumps. We offer a variety of different flow rates, motor sizes and reservoir sizes on our gas/diesel engine pumps. Contact your local BVA dealer for more details.

PG70M4N05

- Gas engine pump will provide 10,000 psi. hydraulic force at remote locations
- Industrial grade 5.5 or 10.2 hp Honda gas engine or 7.3 hp HATZ diesel engine.
- Ideal for applications where electricity isn't easily accessible.
- Two speed pump designed for rapid cylinder advance
- Gas pump features a sturdy protective roll cage for use in the toughest environments
- Optional electric start

Electric Motor Pumps

These HDG cylinders pair up well with Electric Motor pumps. We offer a variety of different flow rates and motor sizes on our electric motor pumps. Contact your local BVA dealer for more details.

PE50W4N03A

- Meets OSHA regulations for sound (80dBA)
- Two speed pump designed for rapid cylinder advance
- Internal filter screens contamination to prevent pump damage
- All units are wired as 120 VAC 60 Hz; Optional wiring includes 50 Hz motors and 240VAC 60Hz
- 100% Duty Cycle TEFC motors
- All hand pendants are wired at 24VAC for safety
- Full load starting capability

HDG Series

Quick Reference Guide

Cylinder Capacity (tons)	Stroke (in)	Model Number	Collapsed Height (in)	Oil Capacity (in^3)	Weight (lbs)
100	1.97	HDG10002	7.17	40.50	61.0
	3.94	HDG10004	9.13	81.00	74.0
	5.91	HDG10006	11.10	121.50	87.0
	7.87	HDG10008	13.07	161.99	100.0
	9.84	HDG10010	15.04	202.49	114.0
	11.81	HDG10012	17.01	242.99	127.0
150	1.97	HDG15002	7.72	59.89	102.0
	3.94	HDG15004	9.69	119.78	122.0
	5.91	HDG15006	11.65	181.75	142.0
	7.87	HDG15008	13.62	239.57	162.0
	9.84	HDG15010	15.59	299.46	181.0
	11.81	HDG15012	17.56	359.35	202.0
200	1.97	HDG20002	8.50	80.68	121.0
	5.91	HDG20006	12.44	243.40	201.0
	7.87	HDG20008	14.41	322.73	242.0
	11.81	HDG20012	18.35	486.79	322.0
300	1.97	HDG30002	12.28	139.19	406.0
	5.91	HDG30006	16.22	417.56	511.0
	11.81	HDG30012	22.13	835.11	668.0
400	1.97	HDG40002	14.74	170.84	595.0
	5.91	HDG40006	18.68	512.51	728.0
	12.01	HDG40012	24.61	1042.10	928.0
500	1.97	HDG50002	16.50	222.92	884.0
	5.91	HDG50006	20.43	668.77	1058.0
	11.81	HDG50012	26.34	1337.56	1321.0
600	1.97	HDG60002	16.89	260.97	1045.0
	5.91	HDG60006	20.83	782.90	1246.0
	9.84	HDG60010	19.88	1408.93	948.0
	11.81	HDG60012	26.73	1566.00	1545.0
800	1.97	HDG80002	18.66	358.91	1634.0
	5.91	HDG80006	22.60	1077.00	1914.0
	11.81	HDG80012	28.50	2153.00	2332.0
1000	1.97	HDG100002	22.20	447.23	2341.0
	5.91	HDG100006	26.14	1342.00	2674.0
	11.81	HDG100012	32.05	2683.00	3172.0
1100-1500	For these higher tonnages, contact your local BVA dealer for pricing and details				

See next pages (pg.20-21) to view more detail stats on High Tonnage Single Acting Cylinders.

Safety Practices

80%

Good industry practice recommends not exceeding 80% of maximum rated capacities of all our products.

Related Product: Gauges

Reduce the risk of overloading your product by using a gauge. A variety of graduations and types to suit any need.

pg 69

High-Flow Couplers

High-Flow Coupler: CH38F is included on all models (except where specified).

Safety Check: CVP3-K

Pilot operated check valve kit. Used to hold the load in the event of a pressure loss in the system.

Relief Valve

All double acting cylinders are equipped with a pressure relief valve located next to the retract port. These pressure relief valves help prevent cylinder over pressurization on the return port side of the cylinder.

Optional Tilt-Saddles

Saddles tilt to a 5% maximum to adjust to the load. View our cylinder accessories page to figure out what saddle best fits these cylinders.

pg 35

High Tonnage Double Acting Cylinders

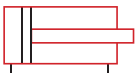

HDG Series - Heavy Lifting

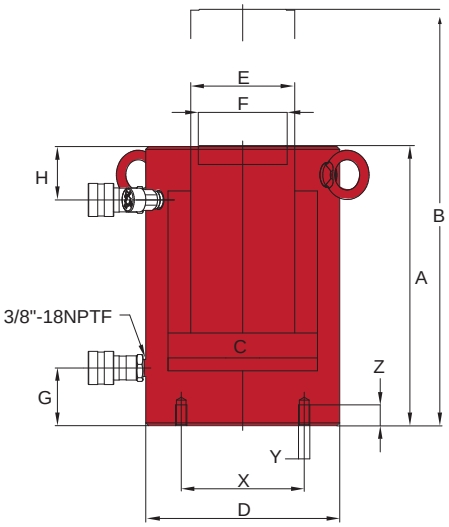

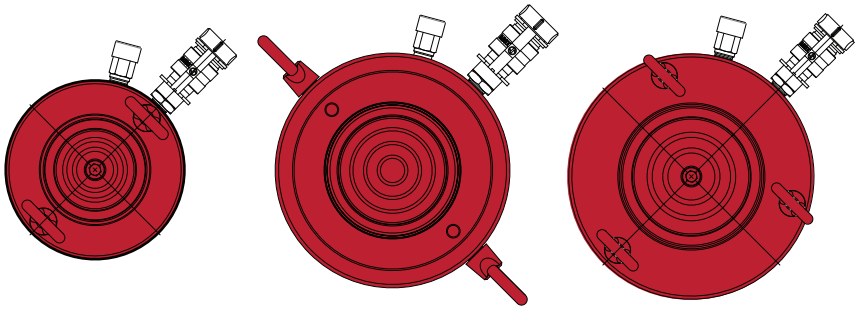

HDG100 *HDG150* *HDG200*

Cylinder Capacity (tons)	Stroke (in)	Model Number	Maximum Cylinder Capacity (ton)		Cylinder Effective Area (in²)		Oil Capacity (in³)		Weight (lbs)
			Push	Pull	Push	Pull	Push	Pull	
100	1.97	HDG10002	102.86	47.93	20.57	9.59	40.50	18.87	61.0
	3.94	HDG10004	102.86	47.93	20.57	9.59	81.00	37.74	74.0
	5.91	HDG10006	102.86	47.93	20.57	9.59	121.50	56.61	87.0
	7.87	HDG10008	102.86	47.93	20.57	9.59	161.99	75.49	100.0
	9.84	HDG10010	102.86	47.93	20.57	9.59	202.49	94.36	114.0
	11.81	HDG10012	102.86	47.93	20.57	9.59	242.99	113.23	127.0
150	1.97	HDG15002	152.15	78.50	30.43	15.70	59.89	30.90	102.0
	3.94	HDG15004	152.15	78.50	30.43	15.70	119.78	61.79	122.0
	5.91	HDG15006	152.15	78.50	30.43	15.70	181.75	88.32	142.0
	7.87	HDG15008	152.15	78.50	30.43	15.70	239.57	123.59	162.0
	9.84	HDG15010	152.15	78.50	30.43	15.70	299.46	154.48	181.0
	11.81	HDG15012	152.15	78.50	30.43	15.70	359.35	185.38	202.0
200	1.97	HDG20002	204.95	94.00	40.99	18.80	80.68	37.01	121.0
	5.91	HDG20006	204.95	94.00	40.99	18.80	243.40	116.23	201.0
	7.87	HDG20008	204.95	94.00	40.99	18.80	322.73	148.03	242.0
	11.81	HDG20012	204.95	94.00	40.99	18.80	486.79	232.46	322.0
300	1.97	HDG30002	353.60	117.00	70.71	23.46	139.19	46.18	406.0
	5.91	HDG30006	353.60	117.00	70.71	23.46	417.56	138.55	511.0
	11.81	HDG30012	353.60	117.00	70.71	23.46	835.11	277.10	668.0
400	1.97	HDG40002	433.90	152.55	86.78	30.51	170.84	59.03	595.0
	5.91	HDG40006	433.90	152.55	86.78	30.51	512.51	177.09	728.0
	12.01	HDG40012	433.90	152.55	86.78	30.51	1042.10	366.38	928.0
500	1.97	HDG50002	566.30	192.00	113.25	38.37	222.92	75.54	884.0
	5.91	HDG50006	566.30	192.00	113.25	38.37	668.77	226.61	1058.0
	11.81	HDG50012	566.30	192.00	113.25	38.37	1337.56	453.23	1321.0
600	1.97	HDG60002	662.90	229.00	132.57	45.79	260.97	90.13	1045.0
	5.91	HDG60006	662.90	229.00	132.57	45.79	782.90	270.39	1246.0
	9.84	HDG60010	670.90	352.85	134.18	70.57	1408.93	740.94	948.0
	11.81	HDG60012	662.90	229.00	132.57	45.79	1566.00	540.79	1545.0
800	1.97	HDG80002	911.60	300.00	182.32	59.99	358.91	118.09	1634.0
	5.91	HDG80006	911.60	300.00	182.32	59.99	1077.00	354.28	1914.0
	11.81	HDG80012	911.60	300.00	182.32	59.99	2153.00	708.57	2332.0
1000	1.97	HDG100002	1136.00	420.00	227.19	83.97	447.23	165.29	2341.0
	5.91	HDG100006	1136.00	420.00	227.19	83.97	1342.00	495.87	2674.0
	11.81	HDG100012	1136.00	420.00	227.19	83.97	2683.00	991.75	3172.0

Relief Valve

All double acting cylinders are equipped with a pressure relief valve located next to the retract port. These pressure relief valves help prevent cylinder over pressurization on the return port side of the cylinder.

Safety Instructions

Visit our DO'S and DON'TS section to review the best methods of operation. Always be prepared.

pg 92

Related Product: CVP3-K

Pilot operated check valve kit. Used to hold the load in the event of a pressure loss in the system.

High-Flow Couplers

High-Flow Coupler: CH38F is included on all models (except where specified).

Optional Tilt-Saddles

Saddles tilt to a 5% maximum to adjust to the load. View our cylinder accessories page to figure out what saddle best fits these cylinders.

pg 35

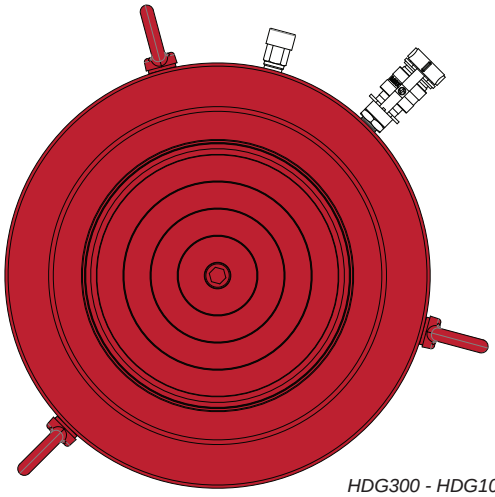

HDG300 - HDG1000

HDG Series

80%

Safety Practices

Good industry practice recommends not exceeding 80% of maximum rated capacities of all our products.

Model Number	Collapsed Height A (in)	Extended Height B (in)	Cylinder Bore Dia. C (in)	Outside Dia. D (in)	Rod Dia. E (in)	Saddle Dia. F (in)	Base To Adv. Port G (in)	Top To Retract Port H (in)	Base Mounting Holes		
									Bolt Circle X (in)	Thread Size (mm)	Thread Depth Z (in)
HDG10002	7.17	9.14	5.12	3.50	3.74	2.95	2.13	1.89	3.74	M12	0.87
HDG10004	9.13	13.07	5.12	3.50	3.74	2.95	2.13	1.89	3.74	M12	0.87
HDG10006	11.10	17.01	5.12	3.50	3.74	2.95	2.13	1.89	3.74	M12	0.87
HDG10008	13.07	20.94	5.12	3.50	3.74	2.95	2.13	1.89	3.74	M12	0.87
HDG10010	15.04	24.88	5.12	3.50	3.74	2.95	2.13	1.89	3.74	M12	0.87
HDG10012	17.01	28.82	5.12	3.50	3.74	2.95	2.13	1.89	3.74	M12	0.87
HDG15002	7.72	9.69	6.22	8.07	4.33	3.70	2.40	2.22	5.12	M12	0.87
HDG15004	9.69	13.62	6.22	8.07	4.33	3.70	2.40	2.22	5.12	M12	0.87
HDG15006	11.65	17.56	6.22	8.07	4.33	3.70	2.40	2.22	5.12	M12	0.87
HDG15008	13.62	21.50	6.22	8.07	4.33	3.70	2.40	2.22	5.12	M12	0.87
HDG15010	15.59	25.43	6.22	8.07	4.33	3.70	2.40	2.22	5.12	M12	0.87
HDG15012	17.56	29.37	6.22	8.07	4.33	3.70	2.40	2.22	5.12	M12	0.87
HDG20002	8.50	10.47	7.22	9.25	5.31	4.45	2.62	2.22	6.50	M12	0.80
HDG20006	12.44	18.35	7.24	9.25	5.31	4.45	2.62	2.22	6.50	M12	0.80
HDG20008	14.41	22.28	7.22	9.25	5.31	4.45	2.62	2.22	6.50	M12	0.80
HDG20012	18.35	30.16	7.24	9.25	5.31	4.45	2.62	2.22	6.50	M12	0.80
HDG30002	12.28	14.25	9.49	12.20	7.76	6.97	3.98	2.95	7.09	M16	1.42
HDG30006	16.22	22.13	9.49	12.20	7.76	6.97	3.98	2.95	7.09	M16	1.42
HDG30012	22.13	33.94	9.49	12.20	7.76	6.97	3.98	2.95	7.09	M16	1.42
HDG40002	14.74	16.71	10.51	13.78	8.50	7.72	4.49	4.13	8.07	M16	1.42
HDG40006	18.68	24.59	10.51	13.78	8.50	7.72	4.49	4.13	8.07	M16	1.42
HDG40012	24.59	36.40	10.51	13.78	8.50	7.72	4.49	4.13	8.07	M16	1.42
HDG50002	16.50	18.46	12.01	15.75	9.76	8.98	4.49	5.31	9.84	M24	1.50
HDG50006	20.43	26.34	12.01	15.75	9.76	8.98	4.49	5.31	9.84	M24	1.50
HDG50012	26.34	38.15	12.01	15.75	9.76	8.98	4.49	5.31	9.84	M24	1.50
HDG60002	16.89	18.86	12.99	16.93	10.51	9.72	4.49	5.31	10.83	M24	1.50
HDG60006	20.83	26.73	12.99	16.93	10.51	9.72	4.49	5.31	10.83	M24	1.50
HDG60010	18.00	28.50	13.07	17.05	9.00	7.87	4.49	5.31	10.83	M24	1.50
HDG60012	26.73	38.54	12.99	16.93	10.51	9.72	4.49	5.31	10.83	M24	1.50
HDG80002	18.66	20.63	15.24	19.88	12.48	11.69	5.87	5.31	12.99	M24	1.50
HDG80006	22.60	28.50	15.24	19.88	12.48	11.69	5.87	5.31	12.99	M24	1.50
HDG80012	28.50	40.31	15.24	19.88	12.48	11.69	5.87	5.31	12.99	M24	1.50
HDG100002	22.20	24.17	17.01	22.05	13.50	12.72	6.85	6.69	14.76	M24	1.50
HDG100006	26.14	32.05	17.01	22.05	13.50	12.72	6.85	6.69	14.76	M24	1.50
HDG100012	32.05	43.86	17.01	22.05	13.50	12.72	6.85	6.69	14.76	M24	1.50

Low Profile Cylinders

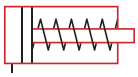

HL Series - Low Clearance Lifting

- Compact design for use in confined spaces
- Rod wiper helps seal out dirt and contamination
- Specially designed return spring provides quick retraction and extends the life of the spring
- Hard chrome plated rod helps prevent scratching and corrosion
- Rod end is grooved to reduce load slippage
- Includes high flow coupler and dust cap
- HL1001, HL2002, and HL3002 coupler is tilted 5° for added clearance

HL Series

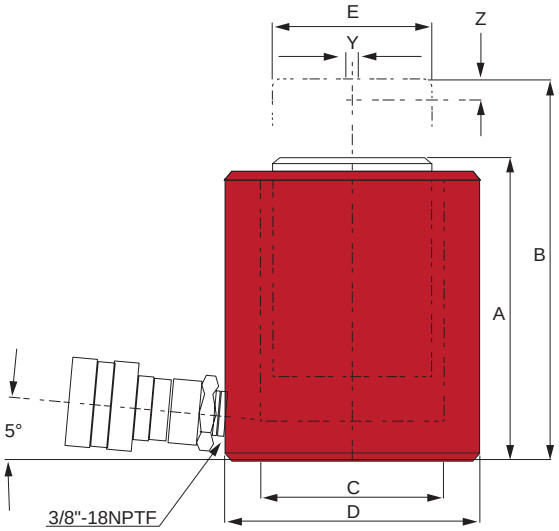

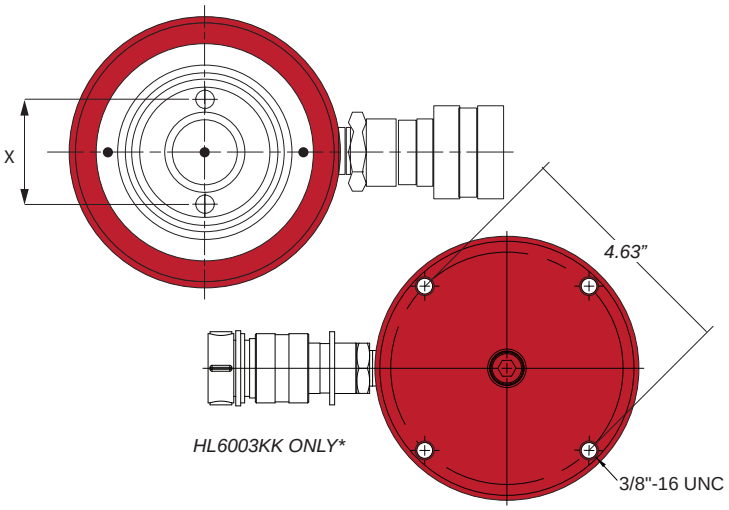

Low profile cylinders are great for confined spaces.

Cylinder Capacity (tons)	Stroke (in)	Model Number	Cylinder Effective Area (in^2)	Internal Pressure at Capacity (psi)	Oil Capacity (in^3)	Weight (lbs)
10	1.50	HL1001	2.35	8,511	3.53	5.7
20	1.75	HL2002	4.37	9,153	7.65	11.0
30	2.44	HL3002	6.49	9,245	15.84	15.0
50	2.36	HL5002	9.87	10,132	23.29	21.8
60	2.50	HL6003KK*	12.57	10,183	31.40	28.0
100	2.24	HL10002	19.64	10,183	44.07	45.4

Model Number	Collapsed Height A (in)	Extended Height B (in)	Cylinder Bore Diameter C (in)	Outside Diameter D (in)	Rod Diameter E (in)	Rod Mounting		
						Bolt Circle X (in)	Thread Y (mm)	Thread Depth Z (in)
HL1001	3.48	4.98	1.73	2.75	1.50	1.03	M4	0.32
HL2002	3.90	5.65	2.36	3.63	2.00	1.56	M4	0.32
HL3002	4.61	7.05	2.87	4.00	2.50	1.56	M5	0.32
HL5002	4.80	7.17	3.54	4.88	2.76	1.56	M5	0.32
HL6003KK*	5.63	8.13	4.00	5.26	3.15	-	-	-
HL10002	5.55	7.80	5.00	6.50	3.54	2.19	M8	0.10

** HL6003KK is equipped with 4x 3/8"-16UMC mounting holes*

Low Profile Cylinders Combo Kit

Low Clearance Lifting

J72101

HL Series

- Compact design for use in confined spaces
- Ideal for pushing applications
- Rod wiper helps seal out dirt and contamination
- Return spring ensures a quick retraction and extends the life of the spring
- Industrial hard chrome plated rod helps prevent scratching and corrosion
- Includes stackable 1″, 2″, and 3″ aluminum adapters that conveniently snap into the base of the rod
- Includes high flow CH38F coupler and dust cap
- Convenient storage case

Safety Practices

80%

Good industry practice recommends not exceeding 80% of maximum rated capacities of all our products.

Related Product: Hoses

We offer a variety of hoses, fittings, lengths and materials.

pg 72

High-Flow Couplers

High-Flow Coupler: CH38F is included on all models (except where specified).

Cylinder Capacity (ton)	Model Number	Stroke (in)	Cylinder Effective Area (in²)	Collapsed Height (in)	Extended Height w/o adapter (in)	Internal Pressure at Capacity (psi)	Cylinder Housing Diameter (in)	Rod Diameter (in)	Weight (lbs)
10	J72101	1.50	2.35	3.48	4.98	8,511	2.75	1.50	10 .0

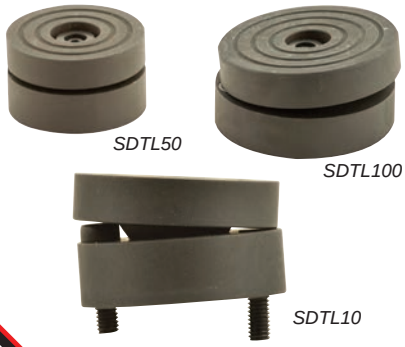

Bolt-On Tilt Saddles

Bolt-On tilt saddles are designed specifically for use with the HL Series Low Profile Cylinders and Low Profile Cylinder Kit. These saddles provide a max. 5° tilt for uneven loads.

Model Number	Height (in)	Description
SDTL10	0.83	J72101, HL1001 Cylinder Kit
SDTL50	1.14	HL5002 Cylinder
SDTL100	1.39	HL10002 Cylinder

Flat Body Cylinders

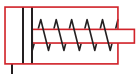

Extremely Low Lifting

- Extremely low collapsed height for applications with minimal clearance at the lift point
- Maximum working pressure 10,000 psi / 700 bar
- HF0503 and HF0503B come with a 3/8″ regular flow coupler

HF Series

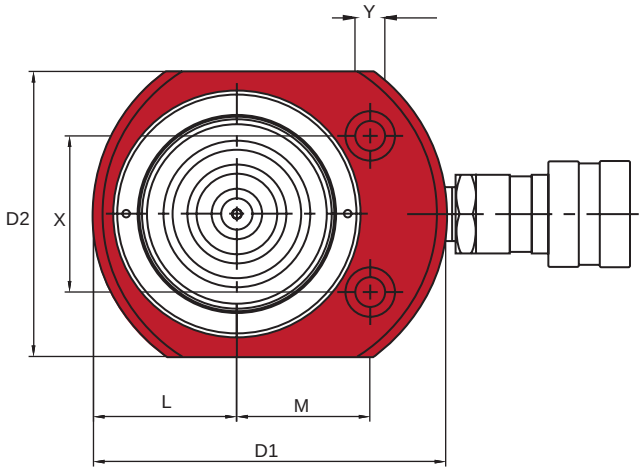

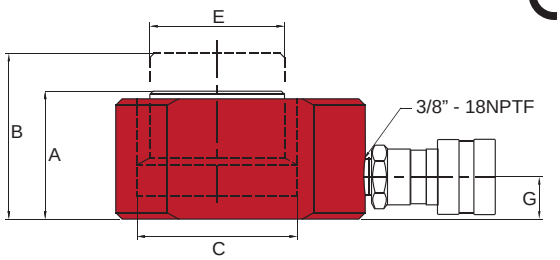

HF5006 in the collapsed position ready to lift a load with a PA1500 foot pump.

Cylinder Capacity (tons)	Stroke (in)	Model Number	Cylinder Effective Area (in^2)	Internal Pressure at Capacity (psi)	Oil Capacity (in^3)	Weight (lbs)
5	0.24	HF0503*	1.10	9,090	0.26	1.3
10	0.43	HF1005	2.36	8,470	1.01	3.3
20	0.43	HF2005	4.38	9,130	1.88	5.9
30	0.51	HF3005	6.49	9,240	3.31	9.7
50	0.63	HF5006	9.86	10,140	6.21	14.9
75	0.63	HF7506	16.10	9,320	10.14	25.4
100	0.63	HF10006	19.64	10,180	12.37	31.5
150	0.63	HF15006	30.67	9,780	19.32	53.4

Model Number	Collapsed Height A (in)	Extended Height B (in)	Cylinder Bore Dia. C (in)	Outside Dia. D1 x D2 D (in)	Rod Dia. E (in)	Base to Port G (in)	Rod to Base L (in)	Rod to Mtg. Hole M (in)	Hole Pitch X (in)	Hole Dia. Y (in)	Counter Bore Dia. (in)	Counter Bore Depth (in)
HF0503*	1.26	1.50	1.18	2.4x1.6	0.98	0.69	0.80	0.87	1.12	0.20	0.31	0.17
HF1005	1.69	2.12	1.73	3.3x2.2	1.50	0.77	1.12	1.32	1.44	0.28	0.42	0.31
HF2005	2.01	2.44	2.36	4.0x3.0	2.00	0.75	1.54	1.56	1.94	0.40	0.59	0.39
HF3005	2.31	2.82	2.87	4.6x3.8	2.50	0.79	1.88	1.75	2.06	0.40	0.63	0.44
HF5006	2.64	3.27	3.54	4.5x4.5	2.76	0.79	2.25	2.13	2.62	0.43	0.75	0.50
HF7506	3.13	3.76	4.53	6.5x5.5	3.54	0.77	2.75	2.63	3.00	0.51	0.83	0.56
HF10006	3.37	4.00	5.00	7.0x6.0	3.54	0.79	3.00	2.94	3.00	0.51	0.83	0.56
HF15006	3.94	4.57	6.25	8.5x7.5	4.65	0.94	3.75	3.25	4.62	0.51	0.83	0.56

**HF0503 comes equipped with the CR38F coupler instead of CH38F*

Flat Body Cylinder Kits

HF Series - Kits

HF Series

- Various height stackable magnetic adapters eliminate dangerous cribbing
- Convenient carrying case
- Magnetic adapters are stackable
- U.S. Patent No.7,237,762 B2

80%

Safety Practices

Good industry practice recommends not exceeding 80% of maximum rated capacities of all our products.

High-Flow Couplers

High-Flow Coupler: CH38F is included on all models (except where specified)

Magnet Shim

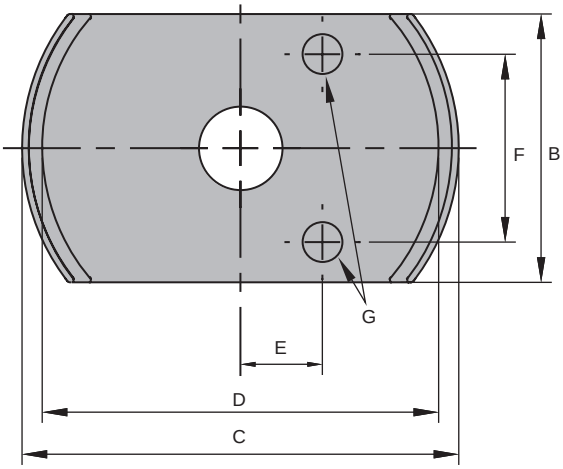

Magnet Shim

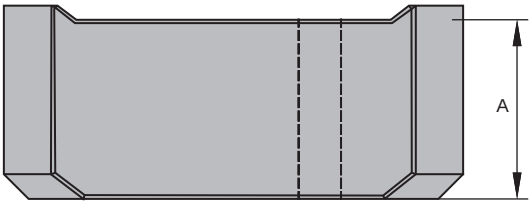

Cylinder Capacity (tons)	Stroke (in)	Model Number	Cylinder Model	Oil Capacity (in^3)	Collapsed Height (in)	Weight (lbs)	Adapter Dimensions						
							A (in)	B (in)	C (in)	D (in)	E (in)	F (in)	G (in)
5	0.24	HF0503B**	HF0503	0.26	1.26	5.5	0.17	1.61	2.56	2.32	0.48	1.10	0.24
							0.42	1.61	2.56	2.32	0.48	1.10	0.24
							0.92	1.61	2.56	2.32	0.48	1.10	0.24
							1.17	1.61	2.56	2.32	0.48	1.10	0.24
10	0.43	HF1005B	HF1005	1.01	1.69	9.2	0.39	2.20	3.54	3.23	0.81	1.46	0.28
							0.79	2.20	3.54	3.23	-	-	-
							1.57	2.20	3.54	3.23	-	-	-
20	0.43	HF2005B	HF2005	1.88	2.01	15.0	0.39	2.99	4.25	3.94	1.08	1.93	0.39
							0.79	2.99	4.25	3.94	-	-	-
							1.57	2.99	4.25	3.94	-	-	-
30	0.51	HF3005B	HF3005	3.31	2.31	21.0	0.39	3.75	4.76	4.45	1.32	2.06	0.39
							0.79	3.75	4.76	4.45	-	-	-
							1.57	3.75	4.76	4.45	-	-	-
50	0.63	HF5006B	HF5006	6.21	2.64	32.3	0.39	4.49	5.89	5.57	1.61	2.62	0.43
							0.79	4.49	5.89	5.57	-	-	-
							1.57	4.49	5.89	5.57	-	-	-

***HF0503B comes equipped with the coupler CR38F*

Lock Nut Cylinders

HLN Series - Heavy Lifting w/ Mechanical Lock Nut

Capacity:

55-300 Tons

Stroke:

1.97 - 11.81 Inches

Max. Operating Pressure:

10,000 psi

Min. - Max. Height:

6.50 - 33.27 Inches

- Single acting cylinder with mechanical safety lock nut
- Designed to support loads without hydraulic pressure
- Overflow port prevents cylinders from over travel
- Load return
- Solid steel cylinder body
- Electroless nickel plated rod to resist corrosion and rust
- Maximum working pressure: 10,000 psi / 700 bar

Optional Tilt Saddles

SDT55	→	HLN55, HLN100 Cylinders
SDT200	→	HLN150, HLN200 Cylinders

Saddles tilt to a 5° max to adjust to the load.

pg35

(42) HLN5508 lock nut cylinders lifting the Jordan Bridge in Chesapeake, VA.

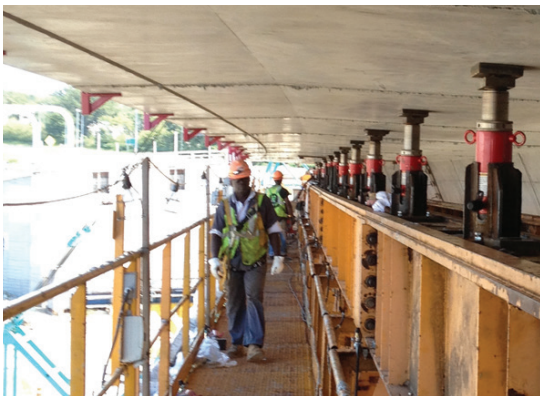

Cylinder Capacity (tons)	Stroke (in)	Model Number	Cylinder Effective Area (in^2)	Oil Capacity (in^3)	Weight (lbs)
55	1.97	HLN5502	10.99	21.65	34.0
	3.94	HLN5504	10.99	43.27	45.0
	5.91	HLN5506	10.99	64.90	55.0
	7.87	HLN5508	10.99	86.54	66.0
	9.84	HLN5510	10.99	108.17	77.0
	11.81	HLN5512	10.99	129.80	87.0
100	1.97	HLN10002	20.57	40.49	67.0
	3.94	HLN10004	20.57	80.98	86.0
	5.91	HLN10006	20.57	121.48	104.0
	7.87	HLN10008	20.57	161.97	123.0
	9.84	HLN10010	20.57	202.46	141.0
	11.81	HLN10012	20.57	242.95	160.0
150	1.97	HLN15002	31.16	61.39	116.0
	3.94	HLN15004	31.16	122.79	145.0
	5.91	HLN15006	31.16	184.18	174.0
	7.87	HLN15008	31.16	245.27	202.0
	9.84	HLN15010	31.16	306.66	231.0
	11.81	HLN15012	31.16	368.05	259.0
200	1.97	HLN20002	41.00	80.70	181.0
	3.94	HLN20004	41.00	161.38	218.0
	5.91	HLN20006	41.00	242.00	256.0
	7.87	HLN20008	41.00	323.00	293.0
	9.84	HLN20010	41.00	403.50	331.0
	11.81	HLN20012	41.00	484.15	368.0
250	1.97	HLN25002	56.27	110.77	253.0
	5.91	HLN25006	56.27	332.32	356.0
	11.81	HLN25012	56.27	664.64	510.0
300	1.97	HLN30002	70.41	138.61	379.0
	5.91	HLN30006	70.41	415.83	510.0
	11.81	HLN30012	70.41	831.66	706.0

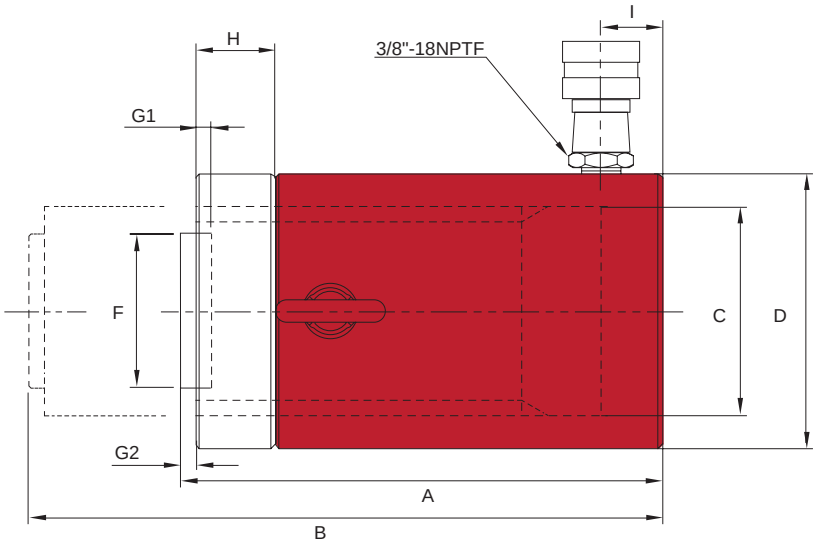

HLN Series

Safety Color Band

BVA Lock nut cylinders are equipped with a yellow safety band. Do not extend the ram beyond this point as it may result in a loss of hydraulic oil and damage to the cylinder and/or load.

Safety Practices

80%

Good industry practice recommends not exceeding 80% of maximum rated capacities of all our products.

Model Number	Collapsed Height A (in)	Extended Height B (in)	Cylinder Bore Diameter C (in)	Outside Diameter D (in)	Saddle Diameter F (in)	Depth of Rod Hole G1 (in)	Saddle Protrusion From Rod G2 (in)	Lock Nut Length H (in)	Base to Inlet Port I (in)
HLN5502	6.50	8.40	3.70	4.90	2.80	0.51	0.08	1.40	1.10
HLN5504	8.40	12.40	3.70	4.90	2.80	0.51	0.08	1.40	1.10
HLN5506	10.40	16.30	3.70	4.90	2.80	0.51	0.08	1.40	1.10
HLN5508	12.40	20.20	3.70	4.90	2.80	0.51	0.08	1.40	1.10
HLN5510	14.30	24.20	3.70	4.90	2.80	0.51	0.08	1.40	1.10
HLN5512	16.30	28.10	3.70	4.90	2.80	0.51	0.08	1.40	1.10
HLN10002	7.40	9.30	5.10	6.50	2.80	0.51	0.08	1.80	1.10
HLN10004	9.30	13.30	5.10	6.50	2.80	0.51	0.08	1.80	1.10
HLN10006	11.30	17.20	5.10	6.50	2.80	0.51	0.08	1.80	1.10
HLN10008	13.30	21.10	5.10	6.50	2.80	0.51	0.08	1.80	1.10
HLN10010	15.20	25.10	5.10	6.50	2.80	0.51	0.08	1.80	1.10
HLN10012	17.20	29.00	5.10	6.50	2.80	0.51	0.08	1.80	1.10
HLN15002	8.23	10.20	6.30	8.07	5.12	0.98	0.08	1.73	1.54
HLN15004	10.20	14.13	6.30	8.07	5.12	0.98	0.08	1.73	1.54
HLN15006	12.17	18.07	6.30	8.07	5.12	0.98	0.08	1.73	1.54
HLN15008	14.13	22.01	6.30	8.07	5.12	0.98	0.08	1.73	1.54
HLN15010	16.10	25.94	6.30	8.07	5.12	0.98	0.08	1.73	1.54
HLN15012	18.07	29.88	6.30	8.07	5.12	0.98	0.08	1.73	1.54
HLN20002	9.57	11.50	7.22	9.25	5.12	0.98	0.08	1.97	1.97
HLN20004	11.54	15.47	7.22	9.25	5.12	0.98	0.08	1.97	1.97
HLN20006	13.50	19.50	7.22	9.25	5.12	0.98	0.08	1.97	1.97
HLN20008	15.50	23.40	7.22	9.25	5.12	0.98	0.08	1.97	1.97
HLN20010	17.40	27.30	7.22	9.25	5.12	0.98	0.08	1.97	1.97
HLN20012	19.41	31.22	7.22	9.25	5.12	0.98	0.08	1.97	1.97
HLN25002	9.80	11.77	8.46	10.83	5.91	0.98	0.08	2.20	1.97
HLN25006	13.74	19.65	8.46	10.83	5.91	0.98	0.08	2.20	1.97
HLN25012	19.65	31.46	8.46	10.83	5.91	0.98	0.08	2.20	1.97
HLN30002	11.61	13.58	9.47	12.20	5.47	0.98	0.20	2.36	2.32
HLN30006	15.55	21.46	9.47	12.20	5.47	0.98	0.20	2.36	2.32
HLN30012	21.46	33.27	9.47	12.20	5.47	0.98	0.20	2.36	2.32

Lock Nut Aluminum Cylinders

HULN Series - Heavy Lifting w/ Mechanical Lock Nut

80%

Safety Practices

Good industry practice recommends not exceeding 80% of maximum rated capacities of all our product.

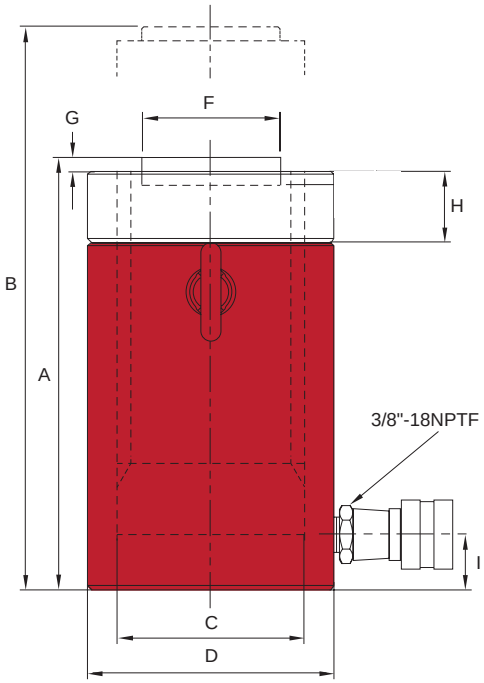

HULN Series

- Single acting cylinder with mechanical safety lock nut
- Designed to support loads without hydraulic pressure
- Overflow port prevents cylinders from over travel
- Load return
- Lightweight aluminum cylinder body
- Steel saddle
- Hard anodized rod to resist corrosion and rust
- Maximum working pressure: 10,000 psi / 700 bar

Cylinder Capacity (tons)	Stroke (in)	Model Number	Cylinder Effective Area (in^2)	Oil Capacity (in^3)	Weight (lbs)	Collapsed Height A (in)	Extended Height B (in)	Cylinder Bore Dia. C (in)	O.D. D (in)	Saddle Dia. F (in)	Saddle Protrusion from Rod G (in)	Lock Nut Length H (in)	Base To Adv Port I (in)
30	2.00	HULN3002	6.50	13.00	15.0	7.75	9.75	2.88	4.50	2.00	0.10	1.25	1.50
	4.00	HULN3004	6.50	26.00	18.0	9.75	13.75	2.88	4.50	2.00	0.10	1.25	1.50
	6.00	HULN3006	6.50	39.00	21.0	11.75	17.75	2.88	4.50	2.00	0.10	1.25	1.50
	8.00	HULN3008	6.50	52.00	24.0	13.75	21.75	2.88	4.50	2.00	0.10	1.25	1.50
	10.00	HULN3010	6.50	65.00	27.0	15.75	25.75	2.88	4.50	2.00	0.10	1.25	1.50
50	2.00	HULN5002	11.04	21.65	21.0	8.13	10.13	3.75	5.50	2.50	0.10	1.50	1.50
	4.00	HULN5004	11.04	43.30	26.0	10.13	14.13	3.75	5.50	2.50	0.10	1.50	1.50
	6.00	HULN5006	11.04	64.92	29.0	12.13	18.13	3.75	5.50	2.50	0.10	1.50	1.50
	8.00	HULN5008	11.04	86.56	34.0	14.13	22.13	3.75	5.50	2.50	0.10	1.50	1.50
	10.00	HULN5010	11.04	108.20	38.0	16.13	26.13	3.75	5.50	2.50	0.10	1.50	1.50
100	2.00	HULN10002	20.68	40.51	43.0	8.38	10.38	5.13	8.00	3.50	0.10	1.75	1.50
	4.00	HULN10004	20.68	81.00	51.0	10.38	14.38	5.13	8.00	3.50	0.10	1.75	1.50
	6.00	HULN10006	20.68	121.50	60.0	12.38	18.38	5.13	8.00	3.50	0.10	1.75	1.50
	8.00	HULN10008	20.68	162.00	69.0	14.38	22.38	5.13	8.00	3.50	0.10	1.75	1.50
	10.00	HULN10010	20.68	202.50	77.0	16.38	26.38	5.13	8.00	3.50	0.10	1.75	1.50
150	2.00	HULN15002	30.68	60.60	66.0	8.38	10.38	6.25	10.00	4.50	0.10	1.75	1.50
	4.00	HULN15004	30.68	121.20	79.0	10.38	14.38	6.25	10.00	4.50	0.10	1.75	1.50
	6.00	HULN15006	30.68	181.80	92.0	12.38	18.38	6.25	10.00	4.50	0.10	1.75	1.50
	8.00	HULN15008	30.68	242.40	106.0	14.38	22.38	6.25	10.00	4.50	0.10	1.75	1.50
	10.00	HULN15010	30.68	303.00	123.0	16.38	26.38	6.25	10.00	4.50	0.10	1.75	1.50

Low Profile Lock Nut Cylinders

Low Clearance Lifting w/ Mechanical Lock Nut

HLNF Series

- Single acting cylinder with mechanical safety lock nut
- Designed to support loads without hydraulic pressure
- Low profile for confined spaces
- 5° tilting saddle is standard
- Maximum working pressure: 10,000 psi/700 bar
- Equipped with CH38F high flow coupler
- Load Return

Safety Instructions

Visit our DO'S and DON'TS section to review the best methods of operation. Always be prepared.

pg 92

Safety Color Band

BVA Lock nut cylinders are equipped with a yellow safety band. Do not extend the ram beyond this point as it may result in a loss of hydraulic oil and damage to the cylinder and/or load.

Related Product: Gauges

Reduce the risk of overloading your product by using a gauge. A variety of graduations and types to suit any need.

pg 69

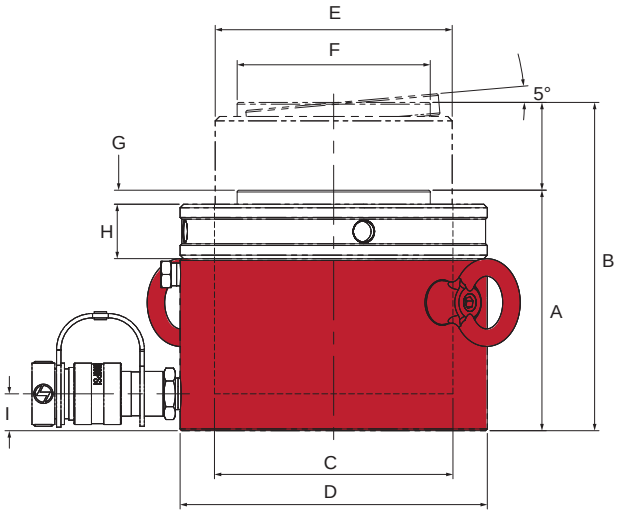

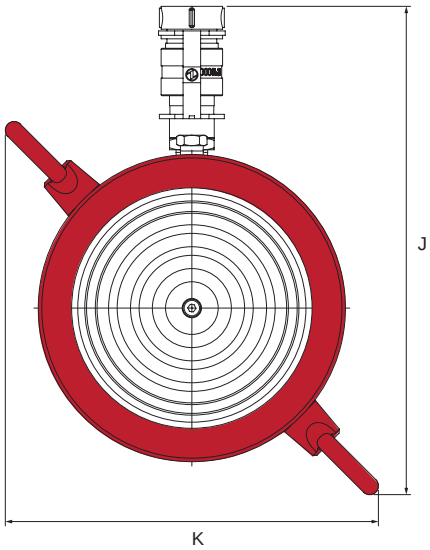

Cylinder Capacity (tons)	Stroke (in)	Model Number	Cylinder Effective Area (in^2)	Oil Capacity (in^3)	Weight (lbs)
60	1.97	HLNF6002	13.42	26.42	31.3
100	1.97	HLNF10002	22.47	44.23	54.1
160	1.77	HLNF16002	35.51	62.91	91.0
200	1.77	HLNF20002	43.95	77.86	118.6
250	1.77	HLNF25002	56.27	99.70	154.6

Model Number	Collapsed Height A (in)	Extended Height B (in)	Cylinder Bore Dia. C (in)	Outside Dia. D (in)	Rod Outside Thread E	Saddle Dia. F (in)	Saddle Protrusion From Rod G (in)	Lock Nut Length H (in)	Base to Inlet Port I (in)	Coupler to Eylet J (in)	Eyelet to Eyelet K (in)
HLNF6002	4.92	6.89	4.13	5.51	TW105-4N	3.23	0.24	1.10	0.75	9.78	7.39
HLNF10002	5.39	7.36	5.35	6.89	TW135-4N	4.33	0.31	1.22	0.83	10.95	8.37
HLNF16002	5.83	7.60	6.72	8.66	TW170-4N	5.83	0.35	1.57	1.06	12.46	9.62
HLNF20002	6.10	7.87	7.48	9.66	TW190-4N	6.30	0.39	1.69	1.18	13.30	10.31
HLNF25002	6.26	8.03	8.46	10.83	TW215-4N	7.28	0.43	1.73	1.26	14.31	11.15

Cylinder Lifting Handles

- Designed for ease of carrying cylinders
- Provides better control for positioning cylinder
- Easy installation

Model Number	For Cylinders
LH25T34	H2504 through H2514
LH30T40	H3008, HD3008, HD3014, HC2002T, HC2006T
LH30T45	HC3002T, HC3006T, HD3007, HDC3010
LH55T49	HLN5504 through HLF5512

LH25T34

Clevis and Tangs

HD cylinders can be used in pushing and pulling applications. In this photo, we see a HD2506 HD cylinder set up for a pull application using a rod clevis cylinder accessory

Rod

CEP Series

Base

CEB Series

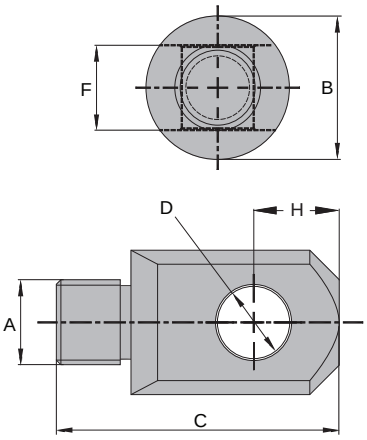

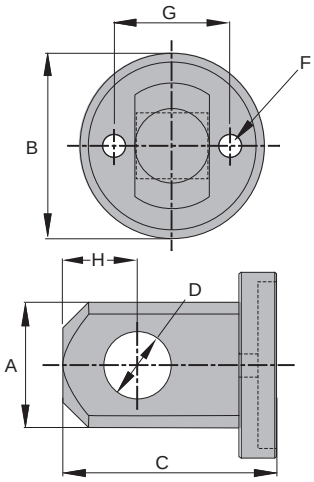

Safety Practices

80% Good industry practice recommends not exceeding 80% of maximum rated capacities of all our products.

Application	Cylinder Series	Model Number	Dimensions (in)						
			A	B	C	D	F	G	H
Rod	H05*	CEP05	¾″-16N	1.13	2.25	0.63	0.56	-	0.63
	H10**, H15, HD10	CEP15	1″-8UN	1.69	3.31	0.88	1.00	-	1.00
	H25	CEP25	1½″-16UNC	2.25	3.81	1.25	1.50	-	1.25
Base	H05*	CEB05	1.52	1.75	2.13	0.63	1.13	1.00	0.63
	H10	CEB10	2.28	2.50	2.87	0.88	0.32	1.56	1.00
	H15	CEB15	2.77	3.00	2.87	0.88	0.38	1.88	1.00
	H25	CEB25	3.40	3.75	3.37	1.25	0.56	2.31	1.25

**Except H0500*
***Except H1001*

Cylinder Bases

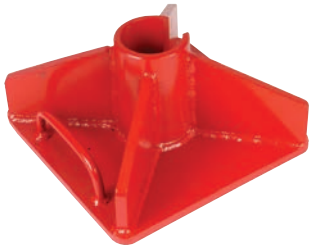

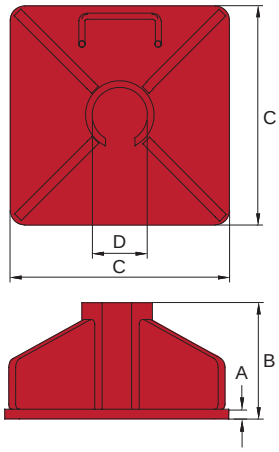

For use with Cylinder Series	Model Number	Dimensions (in)			
		A	B	C	D
H05*	CB05	0.32	4.65	7.87	1.54
H10**	CB10	0.39	4.72	9.06	2.28
H15	CB15	0.47	4.80	10.00	2.76
H25	CB25	0.63	4.96	11.02	3.41

Safety Instructions
Visit our DO'S and DON'TS section to review the best methods of operation. Always be prepared.
pg 92

Cylinder Saddles

Grooved, Tilt, and Threaded

SD Series

SDT Series

SDTG Series

HTD10

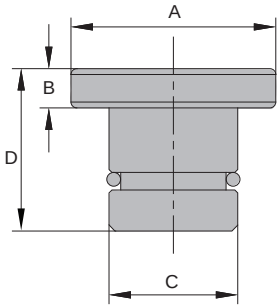

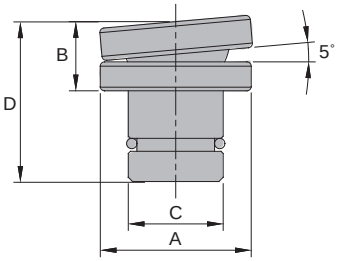

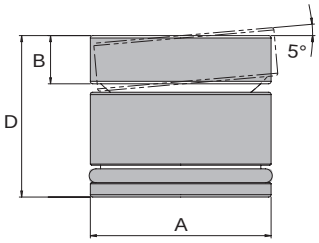

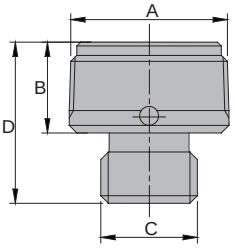

Saddle Type	Model Number	Capacity (ton)	For Cylinder(s)	Dimensions (in)			
				A	B	C	D
Tilt	SDT05	5	H05*	0.98	1.22	0.67	1.20
	SDT10	10	H10**	1.38	1.50	0.86	1.50
	SDT15	15	H15	1.50	1.57	0.86	1.58
	SDT25	25	H25	1.97	1.60	1.14	1.59
	SDT55	55-100	H55, HD55, H75, HD75, H100, HLN55 and HLN100	2.80	1.29	0.50	1.30
	SDTG100	100	HG100 and HDG100	2.95	2.64	1.71	0.79
	SDTG150	150	HG150 and HDG150	3.70	2.71	1.77	0.77
	SDTG200	200	HG200 and HDG200	4.45	3.25	1.95	1.10
	SDT200	150-200	HLN150 and HLN200	5.12	1.77	1.02	0.58
Grooved	SD05	5	H05*	0.98	0.81	-	0.24
	SD10	10	H10**	1.38	1.06	-	0.24
	SD15	15	H15	1.50	1.18	-	0.28
	SD25	25	H25	1.97	1.14	-	0.28
Threaded	HTD10	10	HT1006 and HT1010 H1002-H1014, HD1010-HD1012	1-1/4"- 11.5NPTF	0.95	1"- 8UNC	1.77

**Except H0500*
***Except H1001*

Hollow Hole Cylinders

HC Series

HC1201T

HC6006T

HC3002T

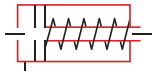

Capacity:

12-100 Tons

Stroke:

0.31 - 6.11 Inches

Max. Operating Pressure:

10,000 psi

Min. - Max. Height:

2.36 - 19.13 Inches

Here is a HC6006T in a pulling application.

- Ideal for pulling and pushing applications
- Heavy duty compression spring
- Dual wipers help prevent contamination
- Collar thread protector
- High flow coupler with dust cap
- XT cylinders do not come with internal rod threads
- 60 and 100 Ton models are equipped with carrying handles

Cylinder Capacity (tons)	Stroke (in)	Model Number	Cylinder Effective Area (in^2)	Internal Pressure at Capacity (psi)	Oil Capacity (in^3)	Weight (lbs)	Collapsed Height A (in)	Extended Height B (in)	Bore Dia. C (in)	O.D. D (in)
12	0.31	HC1201T*	2.91	8,236	0.89	3.3	2.36	2.67	1.92	2.76
	1.61	HC1202T*	2.91	8,236	4.70	6.2	4.74	6.36	1.92	2.76
	1.61	HC1202XT*	2.91	8,236	4.70	6.2	4.74	6.36	1.92	2.76
	2.99	HC1203XT	2.91	8,236	8.72	8.6	7.24	10.24	1.92	2.76
20	2.01	HC2002T	4.90	8,167	9.83	15.9	6.38	8.39	2.50	3.92
	6.06	HC2006T	4.90	8,167	29.70	29.5	12.05	18.11	2.50	3.92
30	2.52	HC3002T	6.32	9,488	15.93	22.9	7.05	9.57	2.84	4.50
	6.11	HC3006T	6.32	9,488	38.67	43.0	13.02	19.13	2.84	4.50
60	3.00	HC6003T**	13.05	9,195	39.10	65.7	9.77	12.77	4.08	6.25
	6.00	HC6006T**	13.05	9,195	78.25	81.1	12.76	18.76	4.08	6.25
100	3.00	HC10003T**	22.13	9,036	66.31	113.3	10.00	13.00	5.31	8.39

** Cylinder comes with a CRZ14F regular flow coupler*
*** Cylinder is equipped with carrying handles*

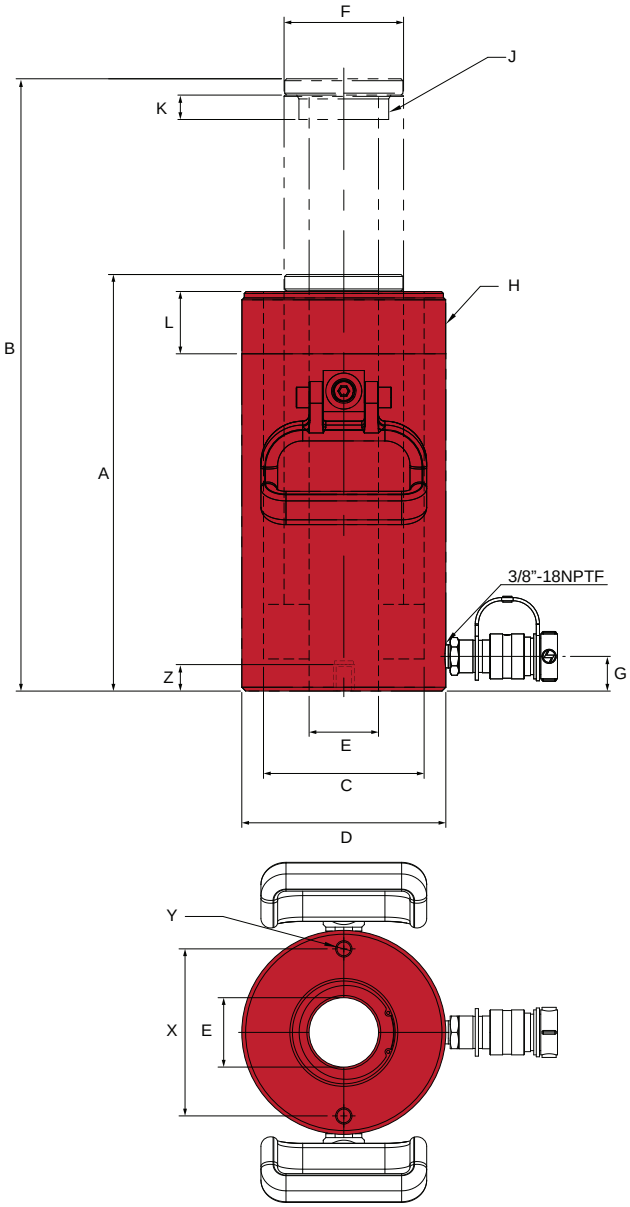

HC Series

Safety Practices

80%

Good industry practice recommends not exceeding 80% of maximum rated capacities of all our products.

Related Product: Gauges

Reduce the risk of overloading your product by using a gauge. A variety of graduations and types to suit any need.

pg 69

Safety Instructions

Visit our DO'S and DON'TS section to review the best methods of operation. Always be prepared.

pg 92

Combo Kits

Most cylinders are available in easy to order kits: cylinder, gauge, couplers, hose and pump.

pg 64

High-Flow Couplers

High-Flow Coupler: CH38F is included on all models (except where specified).

Model Number	Rod				Collar Thread		Base to Inlet Port G (in)	Base Mounting Hole		
	I.D. E (in)	O.D. F (in)	Internal Thread J (in)	Internal Thread Length K (in)	Diameter H (in)	Length L (in)		Bolt Circle X (in)	Thread Y (in)	Thread Depth Z (in)
HC1201T*	0.77	1.38	¾"-16UN	0.63	2¾"-16	1.81	0.57	2.00	5/16"-18UNC	0.35
HC1202T*	0.77	1.38	¾"-16UN	0.63	2¾"-16	1.81	0.59	2.00	5/16"-18UNC	0.35
HC1202XT*	0.77	1.38	-	-	2¾"-16	1.81	0.59	2.00	5/16"-18UNC	0.35
HC1203XT	0.77	1.38	-	-	2¾"-16	1.81	0.75	2.00	5/16"-18UNC	0.35
HC2002T	1.06	2.15	1-9/16"-16UN	0.75	3⅞"-12	1.50	0.75	3.25	⅜"-16UNC	0.37
HC2006T	1.06	2.15	1-9/16"-16UN	0.75	3⅞"-12	1.50	0.75	3.25	⅜"-16UNC	0.37
HC3002T	1.31	2.48	1-13/16"-16UN	0.87	4½"-12	1.66	0.91	3.62	⅜"-16UNC	0.55
HC3006T	1.31	2.48	1-13/16"-16UN	0.87	4½"-12	1.66	0.91	3.62	⅜"-16UNC	0.55
HC6003T**	2.13	3.66	2¾"-16UN	0.75	6¼"-12	1.91	1.06	5.12	½"-13UNC	0.55
HC6006T**	2.13	3.66	2¾"-16UN	0.75	6¼"-12	1.91	1.06	5.12	½"-13UNC	0.55
HC10003T**	3.11	4.92	4"-16UN	0.98	8⅜"-12	2.38	1.06	7.01	⅝"-11UNC	0.75

** Cylinder comes with a CRZ14F regular flow coupler*
*** Cylinder is equipped with carrying handles*

Double Acting Hollow Hole Cylinders

HDC Series

HDC3010

HDC6006

HDC10001

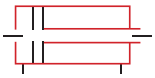

Capacity:

30 - 150 Tons

Stroke:

1.50 - 10.13 Inches

Max. Operating Pressure:

10,000 psi

Min. - Max. Height:

6.50 - 28.27 Inches

CE

Related Product: Gauges

Reduce the risk of overloading your product by using a gauge. A variety of graduations and types to suit any need.

pg 69

Related Product: Hoses

We offer a variety of hoses, fittings, lengths and materials.

pg 72

Combo Kits

Most cylinders are available in easy to order kits: Cylinder, Gauge, Couplers, Hose and Pump.

pg 64

- Ideal for pushing and pulling applications.
- Dual wipers help prevent contamination
- CH38F - 3/8” high flow female coupler
- Hard chrome rod prevents rust and corrosion
- Hardened steel seat

Cylinder Capacity		Stroke (in)	Model Number	Oil Capacity		Collapsed Height (in)	Extended Height (in)	Center Hole I.D. (in)	Rod O.D. (in)	Max Pressure (psi)	Weight (lbs)
Push (ton)	Pull (ton)			Push (in^3)	Pull (in^3)						
30	20	7.00	HDC3007	44.31	27.74	13.02	20.02	1.31	2.48	10.000	43.0
		10.13	HDC3010	64.15	40.16	17.00	27.13	1.31	2.48	10.000	56.7
60	44	3.50	HDC6003	45.75	30.49	9.77	13.28	2.13	3.62	10.000	65.7
		6.50	HDC6006	84.81	56.53	12.76	19.26	2.13	3.62	10.000	81.1
		10.12	HDC6010	132.10	88.04	17.25	27.37	2.13	3.62	10.000	112.4
100	71	1.50	HDC10001	33.23	21.18	6.50	8.00	3.11	4.92	10.000	73.7
		3.00	HDC10003	66.47	42.37	10.00	13.00	3.11	4.92	10.000	113.3
		6.00	HDC10006	132.39	84.73	13.49	19.49	3.11	4.92	10.000	153.2
		10.13	HDC10010	224.52	143.11	18.14	28.27	3.11	4.92	10.000	198.9
150	82.8	8.00	HDC15008	259.19	132.44	13.75	21.75	3.94	5.91	10.000	239.2

HDC Series

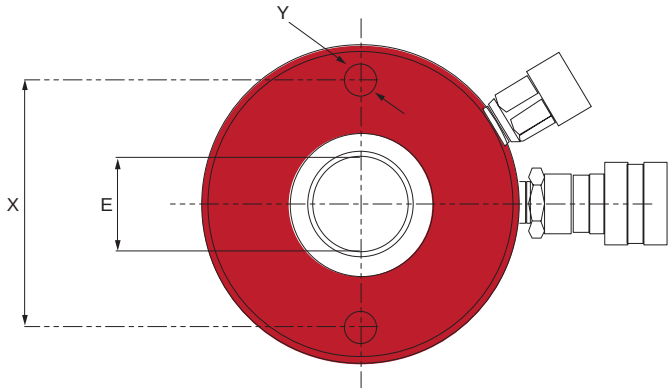

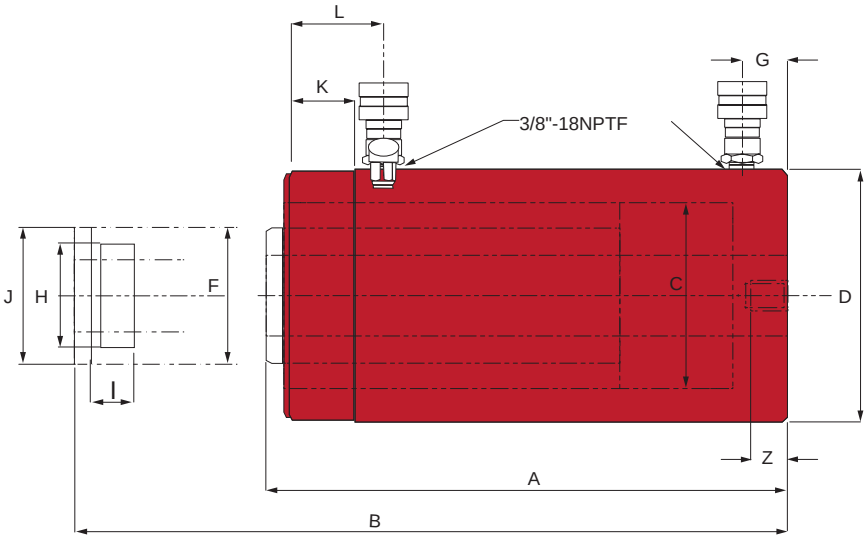

Safety Practices

80%

Good industry practice recommends not exceeding 80% of maximum rated capacities of all our products.

Relief Valve

All double acting cylinders are equipped with a pressure relief valve located next to the retract port. These pressure relief valves help prevent cylinder over pressurization on the return port side of the cylinder.

High-Flow Couplers

High-Flow Coupler: CH38F is included on all models (except where specified).

Safety Instructions

Visit our DO'S and DON'TS section to review the best methods of operation. Always be prepared.

pg 92

Model Number	Min. Height A (in)	Max. Height B (in)	Dia. of Center Tube C (in)	O.D. D (in)	I.D. E (in)	O.D. F (in)	Base to Inlet Port G (in)	Top to Return Port L (in)	Internal Thread H (in)	Internal Thread Length I (in)	Collar Thread		Base Mounting Hole		
											Dia. J (in)	Length K (in)	Bolt Circle X (in)	Thread Y (in)	Thread Depth Z (in)
HDC3007	13.02	20.02	3.35	4.50	1.31	2.48	0.91	2.38	1 13/16"-16UN	0.94	4½"-12	1.66	3.62	⅜"-16UNC	0.55
HDC3010	17.00	27.13	3.35	4.50	1.31	2.48	0.91	2.38	1 13/16"-16UN	0.94	4½"-12	1.66	3.62	⅜"-16UNC	0.55
HDC6003	9.77	13.28	4.92	6.25	2.13	3.62	1.06	2.64	2¾"-16UN	0.83	6¼"-12	1.91	5.12	½" 13UNC	0.55
HDC6006	12.76	19.26	4.92	6.25	2.13	3.62	1.06	2.64	2¾"-16UN	0.83	6¼"-12	1.91	5.12	½" 13UNC	0.55
HDC6010	17.25	27.37	4.92	6.25	2.13	3.62	1.06	2.64	2¾"-16UN	0.83	6¼"-12	1.91	5.12	½" 13UNC	0.55
HDC10001	6.50	8.00	6.50	8.39	3.11	4.92	1.06	1.75	4"- 16UN	1.06	-	-	7.01	⅝" 11UNC	0.75
HDC10003	10.00	13.00	6.50	8.39	3.11	4.92	1.06	3.39	4"- 16UN	1.06	8⅜"-12	2.38	7.01	⅝" 11UNC	0.75
HDC10006	13.49	19.49	6.50	8.39	3.11	4.92	1.06	3.39	4"- 16UN	1.06	8⅜"-12	2.38	7.01	⅝" 11UNC	0.75
HDC10010	18.14	28.27	6.50	8.39	3.11	4.92	1.06	3.39	4"- 16UN	1.06	8⅜"-12	2.38	7.01	⅝" 11UNC	0.75
HDC15008	13.75	21.75	7.48	9.75	3.94	5.91	1.50	2.38	-	-	-	-	-	-	-

Hollow Hole Aluminum Cylinders

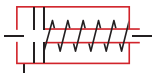

HUC Series - Lightweight, Spring Return

Safety Practices

Good industry practice recommends not exceeding 80% of maximum rated capacities of all our products.

Related Product: Gauges

Reduce the risk of overloading your product by using a gauge. A variety of graduations and types to suit any need.

pg 69

HUC Series

Cylinder Capacity (tons)	Stroke (in)	Model Number	Cylinder Effective Area (in^2)	Oil Capacity (in^3)	Weight (lbs)	Collapsed Height (in)	Extended Height (in)	Center Hole Diameter (in)	Outside Diameter (in)	Base To Advance Port (in)	Handle or Eyelets
30	3.00	HUC3003	7.21	22.00	22.0	8.68	11.68	1.31	5.50	1.00	H
	6.00	HUC3006	7.21	44.00	30.0	11.68	17.68	1.31	5.50	1.00	H
60	3.00	HUC6003	12.3	37.00	42.0	10.25	13.25	2.13	7.50	1.00	H
	6.00	HUC6006	12.3	74.00	55.0	13.25	19.25	2.13	7.50	1.00	H

Double Acting Aluminum Hollow Hole Cylinders

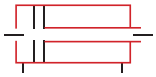

HUDC Series - Lightweight

Safety Instructions

Visit our DO'S and DON'TS section to review the best methods of operation. Always be prepared.

pg 92

Relief Valve

All double acting cylinders are equipped with a pressure relief valve located next to the retract port. These pressure relief valves help prevent cylinder over pressurization on the return port side of the cylinder.

HUDC Series

Cylinder Capacity (tons)	Stroke (in)	Model Number	Maximum Cylinder Capacity (ton)		Cylinder Effective Area (in^2)		Oil Capacity (in^3)		Weight (lbs)	Collapsed Height (in)	Extended Height (in)	Cylinder Bore Dia. (in)	Outside Dia. (in)	Base To Adv. Port (in)	Top To Retract Port (in)	Handles or Eyelets
			Push	Pull	Push	Pull	Push	Pull								
30	6.00	HUDC3006	30.00	10.12	6.35	2.02	38.07	12.15	30.0	11.50	17.50	1.50	5.50	2.00	2.00	H
	10.00	HUDC3010	30.00	10.12	6.35	2.02	63.45	20.25	40.0	15.50	25.50	1.50	5.50	2.00	2.00	H
50	6.00	HUDC5006	50.00	17.18	10.30	3.43	61.85	20.61	50.0	11.50	17.50	2.13	7.50	2.00	2.00	H
	10.00	HUDC5010	50.00	17.18	10.30	3.43	103.08	34.36	65.0	15.50	25.50	2.13	7.50	2.00	2.00	H
100	6.00	HUDC10006	100.00	37.55	21.59	7.51	129.59	45.06	125.0	14.50	20.50	3.50	11.00	2.50	2.00	E
	10.00	HUDC10010	100.00	37.55	21.59	7.51	215.98	75.10	142.0	18.50	28.50	3.50	11.00	2.50	2.50	E
150	6.00	HUDC15006	150.00	55.00	30.00	11.00	183.73	65.97	158.0	14.50	20.50	3.50	12.00	2.50	2.00	E
	10.00	HUDC15010	150.00	55.00	30.00	11.00	306.30	109.95	180.0	18.50	28.50	3.50	12.00	2.50	2.50	E

HP Series

Pull Cylinders

HP Series - High-Tonnage Pulling

- High strength steel construction
- One piece high grade alloy bearing for side load protection and longer life
- Polyurethane cup seal provides optimum performance
- External rod threads and Internal base threads
- Used for pulling and tensioning
- Maximum working pressure: 10,000 psi / 700 bar
- Spring extend return

Related Product: Hoses

We offer a variety of hoses, fittings, lengths and materials.

pg 72

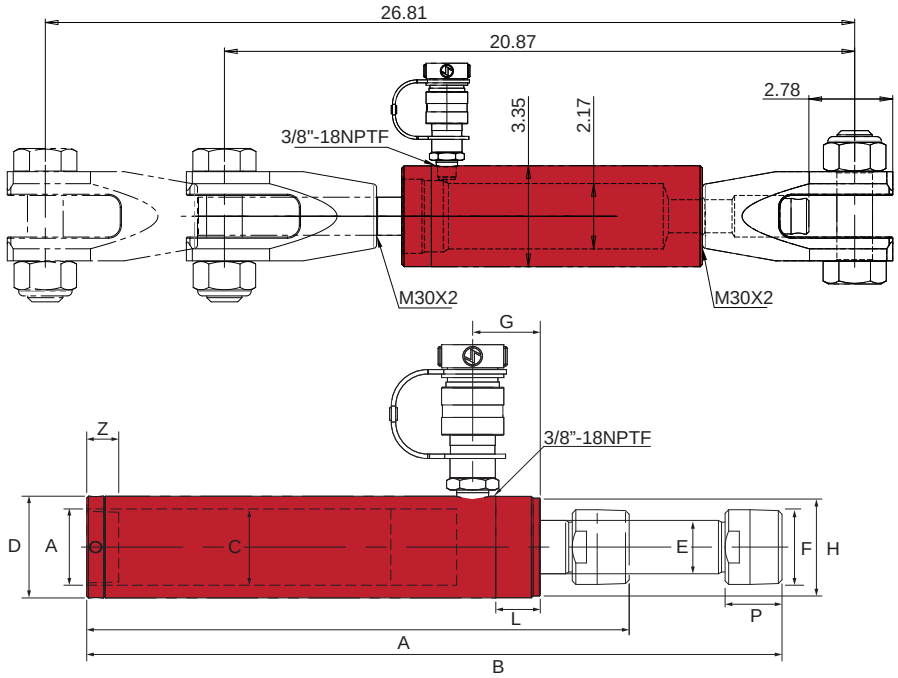

CP10

The CP10* comes was a male/female set. This clevis is designed to aid in pulling applications with all the HP series cylinders.

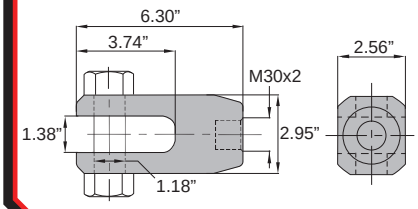

** CP10 only works with HP1006*

Cylinder Capacity (tons)	Stroke (in)	Model Number	Cylinder Effective Area (in^2)	Internal Pressure At Capacity (psi)	Oil Capacity (in^3)	Collapsed Height A (in)	Extended Height B (in)	Outside Dia. D (in)	Cylinder Bore Dia. C (in)	Top to Inlet Port G (in)	Collar	
											Thread H	Thread Length L (in)
2.5	5.00	HP0205	0.56	7,905	2.78	10.55	15.55	1.89	1.13	1.65	1½"-16UN	0.98
5	5.55	HP0505	1.14	8,772	6.34	11.93	17.48	2.25	1.69	1.50	2¼"-14UN	1.00
10	5.95	HP1006*	2.44	7,663	14.48	11.75	17.70	3.35	2.17	1.50	M85x2	1.00

Model Number	Adapter		Rod			Base Mounting Hole		Weight (lbs)
	Thread F (in)	Length P (in)	Dia. E (in)	Thread Length K (in)	Thread Q (mm)	Thread Y	Depth Z (in)	
HP0205	¾"-14NPTF	1.13	0.75	0.76	M16 x 1.5	¾"-14NPTF	0.72	6.4
HP0505	1¼"-11.5NPTF	1.25	1.18	0.93	M28 x 1.5	1¼"-11.5NPTF	0.95	9.3
HP1006*	-	-	1.26	1.02	M30 x 2	M30x2	0.98	20.9

** CP10 only works with HP1006*

Threaded Cylinders

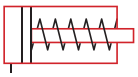

HT Series

- Ideal for frame pulling machines
- Threaded rod and base
- Single acting cylinders with spring return
- Removable threaded Rod adapter used to attach accessories to rod end and base
- Maximum working pressure: 10,000 psi / 700 bar

HT Series

Safety Practices

80%

Good industry practice recommends not exceeding 80% of maximum rated capacities of all our products.

Safety Instructions

Visit our DO'S and DON'TS section to review the best methods of operation. Always be prepared.

pg 92

Combo Kits

Most cylinders are available in easy to order kits: cylinder, gauge, couplers, hose and pump.

pg 64

High-Flow Couplers

High-Flow Coupler: CH38F is included on all models (except where specified).

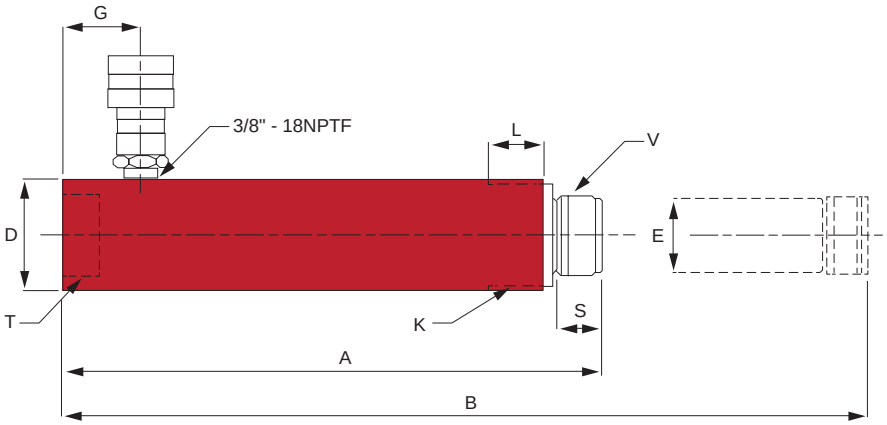

Cylinder Capacity (tons)	Stroke (in)	Model Number	Cylinder Effective Area (in^2)	Internal Pressure at Capacity (psi)	Oil Capacity (in^3)	Collapsed Height A (in)	Extended Height B (in)	Weight (lbs)
4	5.07	HT0405*	1.00	10,120	5.00	10.31	15.39	5.0
10	5.95	HT1006	2.24	8,928	13.33	11.46	17.41	10.6
	9.96	HT1010	2.24	8,928	22.30	15.47	25.43	14.1
20	5.16	HT2005	5.14	10,741	25.70	11.77	16.93	22.0

Model Number	Outside Dia. D (in)	Rod Dia. E (in)	Base to Inlet Port G (in)	Collar K	Collar Thread Length L (in)	Saddle Height S (in)	Base Threads T (in)	Rod Threads V (in)
HT0405*	1.50	1.33	1.33	1.5"-16UNF	0.94	1.00	¾" - 14 NPSM	0.75" - 14 NPTF
HT1006	2.26	1.49	1.67	2.25"-14UN	1.13	0.94	1.25" -11.5 NPSM	1.25" -11.5 NPSM
HT1010	2.26	1.49	1.67	2.25"-14UN	1.13	0.94	1.25" -11.5 NPSM	1.25" -11.5 NPSM
HT2005	3.35	2.24	1.85	3.31"-12UN	1.98	1.40	2" -11.5 NPTF	2" -11.5 NPSM

** Cylinder comes with a coupler: CRZ14F instead of CH38F*

Precision Double Acting Cylinders

HPD Series - High-Cycle Fixtured Application

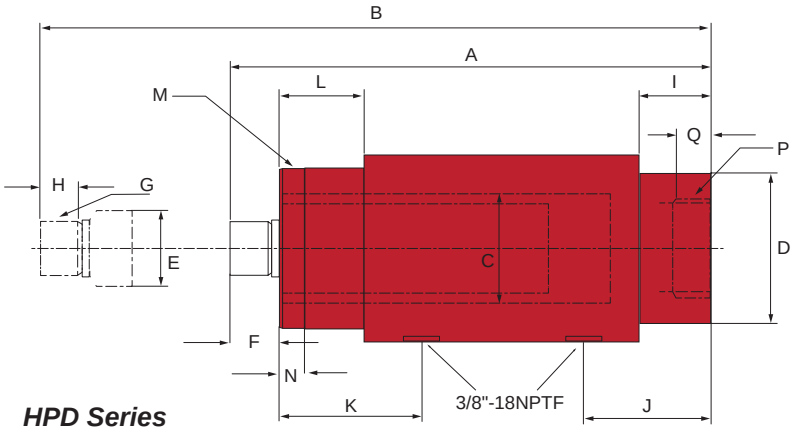

HPD Series

**Note: Precision double acting cylinders do not come with couplers.*

- Provides hydraulic power on both extend and retract
- Designed for high cycle production applications
- High strength steel construction from gun drilled solid bar
- Rod wiper seals keep dirt and contamination out
- Clevis eye attachments are available
- Maximum working pressure: 10,000 psi / 700 bar

Related Product: Hoses

We offer a variety of hoses, fittings, lengths and materials.

pg 72

Cylinder Capacity (tons)	Model Number	Push Effective Area (in^2)	Pull Effective Area (in^2)	Collapsed Height A (in)	Extended Height B (in)	Cylinder Bore Dia. C (in)	Outside Dia. D (in)
9	HPD0906	1.77	1.01	13.78	19.88	1.50	2.52
	HPD0910	1.77	1.01	17.80	27.91	1.50	2.52
16	HPD1606	3.14	1.56	15.31	21.57	2.00	2.99
	HPD1610	3.14	1.56	19.29	29.53	2.00	2.99

Model Number	Rod				Base to Adv. Port J (in)	Top to Return Port K (in)	Collar					Weight (lbs)
	Dia. E (in)	Protrusion F (in)	Thread G (in)	Thread Length H (in)			Length L (in)	Thread M (in)	Thread Length N (in)	Int. Base Thread P (in)	Int. Base Thread Length Q (in)	
HPD0906	0.98	0.98	¾″-16	0.75	1.50	2.20	1.50	2″-12	0.60	1-11/16″-18	1.37	14.6
HPD0910	0.98	0.98	¾″-16	0.75	1.50	2.20	1.50	2″-12	0.60	1-11/16″-18	1.37	18.5
HPD1606	1.42	1.16	1⅛″-12	0.98	2.12	2.87	2.12	2⅝″-16	0.98	2-3/16″-16	1.61	22.0
HPD1606	1.42	1.16	1⅛″-12	0.98	2.12	2.87	2.12	2⅝″-16	0.98	2-3/16″-16	1.61	28.2

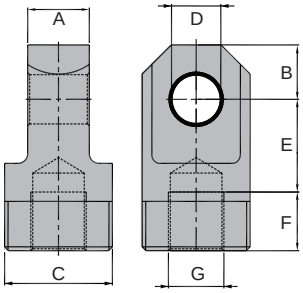

CED Series

By attaching this clevis eye to a HPD cylinder, you gain the ability to pull applications. For use with the 9 or 16 ton HPD cylinders only.

Dimensions (in)							
Model Number	A	B	C	D	E	F	G
CED09	1.00	0.90	1-11/16”-16N	0.75	1.31	0.94	¾”-16N
CED16	1.25	1.10	2-3/16”-16N	1.00	1.88	1.19	1⅛”12N

Hand Pump Matching Chart

Hand Pumps

- Match up the stroke length to the capacity of your cylinder to find the selected hand pump to go with your cylinder

Stroke (in)	Capacity (tons)							
	5	10	15	25	30	55	75	100
< 1.0	0.69	-	-	-	-	-	-	-
1.0	1.00	2.24	3.14	5.14	6.49	10.99	16.10	20.57
2.0	2.00	4.48	6.28	10.28	12.98	21.98	32.20	41.14
3.0	3.00	6.72	9.42	15.42	19.47	32.97	48.30	61.71
4.0	4.00	8.96	12.56	20.56	25.96	43.96	64.40	82.28
5.0	5.00	11.20	15.70	25.70	32.45	54.95	80.50	102.85
6.0	6.00	13.44	18.84	30.84	38.94	65.94	96.60	123.42
7.0	7.00	15.68	21.98	35.98	45.43	76.93	112.70	143.99
8.0	8.00	17.92	25.12	41.12	51.92	87.92	128.80	164.56
9.0	9.00	20.16	28.26	46.26	58.41	98.91	144.90	185.13
10.0	10.00	22.40	31.40	51.40	64.90	109.90	161.00	205.70
12.0	12.00	26.88	37.68	61.68	77.80	131.88	193.20	246.84
13.0	13.00	29.12	40.82	66.82	84.37	142.87	209.30	267.41
14.0	14.00	31.36	43.96	71.96	90.86	153.86	225.40	287.98
Suggested* Hand Pump Models	P350 P601S	P1000 P1201S P1201		P2001 P2301 P2301M		P4301		P8701 P8701M

**The suggested pump model is based on oil capacity requirements of the cylinder.*

Matching Chart

Air, Electric, and Gas Engine Pumps

- Match up the stroke length and capacity of the cylinder to find the suggested pump to work with your application

Stroke (in)	Capacity (tons)							
	5	10	15	25	30	55	75	100
< 1.0	0.69	-	-	-	-	-	-	-
1.0	1.00	2.24	3.14	5.14	6.49	10.99	16.10	20.57
2.0	2.00	4.48	6.28	10.28	12.98	21.98	32.20	41.14
3.0	3.00	6.72	9.42	15.42	19.47	32.97	48.30	61.71
4.0	4.00	8.96	12.56	20.56	25.96	43.96	64.40	82.28
5.0	5.00	11.20	15.70	25.70	32.45	54.95	80.50	102.85
6.0	6.00	13.44	18.84	30.84	38.94	65.94	96.60	123.42
7.0	7.00	15.68	21.98	35.98	45.43	76.93	112.70	143.99
8.0	8.00	17.92	25.12	41.12	51.92	87.92	128.80	164.56
9.0	9.00	20.16	28.26	46.26	58.41	98.91	144.90	185.13
10.0	10.00	22.40	31.40	51.40	64.90	109.90	161.00	205.70
12.0	12.00	26.88	37.68	61.68	77.80	131.88	193.20	246.84
13.0	13.00	29.12	40.82	66.82	84.37	142.87	209.30	267.41
14.0	14.00	31.36	43.96	71.96	90.86	153.86	225.40	287.98
Suggested Air/Electric/Gas Pump Models	PA600	PA1500 PA1500L PA1500M PA2000			PA3801 PA3801M PE30M3N01A		PE40M3N02A PE50M3N03A PG70M3N05	

Power Source	Pump Type	Page Number / Reference Image
Manual	Single Speed Metal Hand Pumps (P-Series)	46-47
	Two Speed Metal Hand Pumps (P-Series)	
	Two Speed Aluminum Hand Pumps (P-Series)	
	Double Acting Hand Pumps (P-Series)	
	Low Pressure Hand Pump (P-Series)	
	Two Speed Aluminum Multi Direction Hand Pump (P-Series)	
	Foot Pump (P57-Series)	48
Air	Rotary Air Pumps (PAR-Series)	49
	Portable Air Pump (PA-Series)	50-51
	Metal Air Pumps (PA-Series)	
	Double Acting Air Pump (PA-Series)	
	Remote Control Air Pump (PA-Series)	
Electric	Single Phase Electric Pumps	52-55
	PE30 0.5 HP Electric Pumps	
	PE40 1.0 HP Electric Pumps	
	PE50 1.5 HP Electric Pumps	
	3 Phase Electric Pumps	56-59
	PE40 1.0 HP 3 Phase Electric Pumps	
	PE60 3.0 HP 3 Phase Electric Pumps	
	Universal Motor Pumps (PU-Series)	63
Gas	PG70 5.5 HP Gas Engine Pump	60-62
	PG90 10.2 HP Gas Engine Pump	
	PD80 7.3 HP HATZ Diesel Engine Pump	

Control Valves and Accessories Page 66 ►

Hand Pumps

Aluminum and Steel

P Series

Combo Kits

Most hand pumps are available in easy to order kits; Pump, Gauge, Couplers, Hose and Cylinder

pg 64

Related Product: Gauges

Reduce the risk of overloading your product by using a gauge. A variety of graduations and types to suit any need.

pg 69

Safety Instructions

Visit our DO'S and DON'TS section to review the best methods of operation. Always be prepared.

pg 92

Product Information

- Metal reservoirs resist cracking
- Internal pressure relief valve for overload protection
- Good for use with cylinders and hydraulic tools or OEM applications
- Two-Speed pumps reduce user fatigue and increase productivity
- P1000AD can be not only be used in the standard horizontal position, but can also be used with the outlet port facing upwards or downwards positions providing more flexibility in operation
- P1000RP comes with a 7/16"-20 return-to-tank port for applications where this is required

Model Number	Usable Oil Capacity (in^3)	Oil Outlet Port	Pressure Rating/Oil Displacement per Stroke		Piston Stroke (in)	Handle Operating Force (lbs)	Reservoir Construction
			1st Stage (psi/in^3)	2nd Stage (psi/in^3)			
Single Speed - Single Acting							
P240L	15	¼"-18 NPTF	n/a	7,200 / 0.09	0.63	56	Steel
P601S	37	⅜"-18 NPTF	n/a	10,000 / 0.15	0.79	109	Steel
P1201S	67	⅜"-18 NPTF	n/a	10,000 / 0.13	0.82	89	Steel
2-Speed - Single Acting							
P350	21.4	¼"-18 NPTF	200 / 0.18	10,000 / 0.05	0.38	88	Aluminum
P1000	61	⅜"-18 NPTF	200 / 0.81	10,000 / 0.14	0.82	99	Aluminum
P1000AD*	53-62	⅜"-18 NPTF	200 / 0.81	10,000 / 0.14	0.82	99	Aluminum
P1000RP**	61	⅜"-18 NPTF	200 / 0.81	5,000 / 0.14	0.82	99	Aluminum
P1201	67	⅜"-18 NPTF	200 / 0.81	10,000 / 0.14	0.82	99	Steel
P2001	122	⅜"-18 NPTF	200 / 0.81	10,000 / 0.14	0.82	95	Steel
P2301	134	⅜"-18 NPTF	200 / 0.81	10,000 / 0.14	0.82	99	Steel
P4301	250	⅜"-18 NPTF	200 / 0.81	10,000 / 0.14	0.82	99	Steel
P8701	476	⅜"-18 NPTF	290 / 7.71	10,000 / 0.29	1.69	143	Steel
2-Speed - Double Acting							
P2301M	134	⅜"-18 NPTF	200 / 0.81	10,000 / 0.14	0.82	99	Steel
P8701M	476	⅜"-18 NPTF	290 / 7.71	10,000 / 0.29	1.69	143	Steel

** Oil capacity varies by position. Pump can be mounted outlet up or down*
*** Unit is equipped with a 7/16"-20 Tank Return Port*

P240L

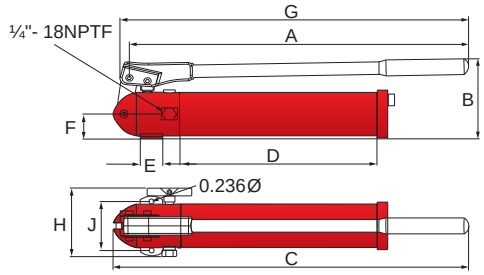

P601S

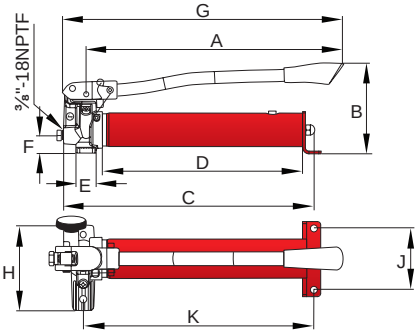

P1201S, P1201

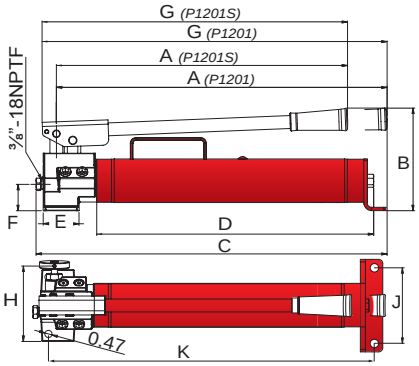

P350

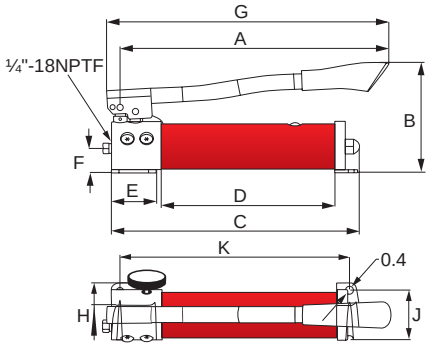

P1000, P1000AD, P1000RP

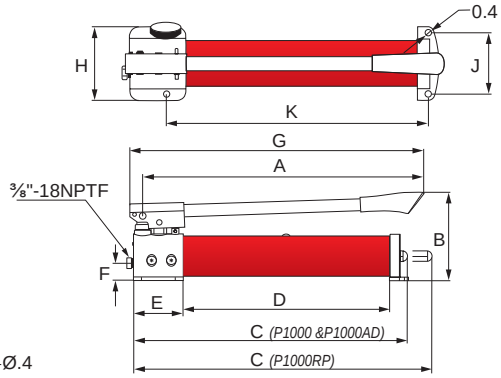

P2001, P2301, P2301M

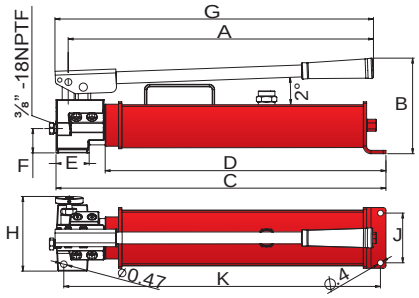

P4301

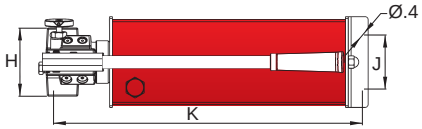

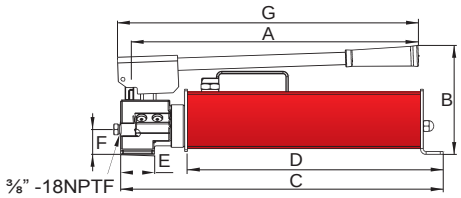

P8701, P8701M

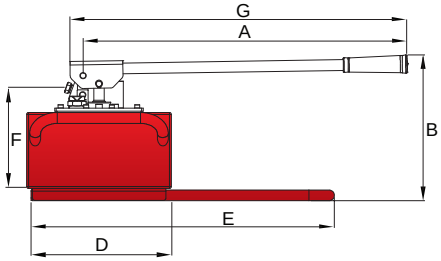

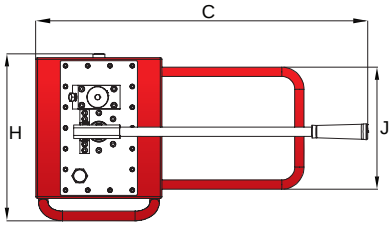

Model Number	Dimensions										Weight w/Oil (lbs)
	A	B	C	D	E	F	G	H	J	K	
Single Speed - Single Acting											
P240L	14.80	4.25	15.45	8.68	1.00	1.25	15.25	3.50	2.44	-	9.0
P601S	18.94	6.46	19.53	15.35	1.57	1.26	20.79	5.20	3.74	14.45	13.0
P1201S	20.50	6.50	21.75	17.50	2.13	1.75	22.63	5.25	3.74	21.25	20.0
2-Speed - Single Acting											
P350	13.43	5.91	13.89	9.09	2.36	1.34	14.13	3.35	2.56	-	6.6
P1000	21.77	6.34	23.03	14.96	3.59	1.26	19.96	4.88	3.94	16.93	13.7
P1000AD*	21.77	6.34	23.03	14.96	3.59	1.26	19.96	4.88	3.94	16.93	13.7
P1000RP**	21.63	6.50	20.50	15.13	3.63	1.26	22.63	4.88	3.75	15.50	13.7
P1201	21.73	6.73	23.07	18.38	2.13	1.73	22.63	4.92	3.74	18.27	20.5
P2001	22.91	6.89	24.29	18.38	2.25	1.73	23.75	4.80	2.56	-	24.2
P2301	21.73	6.81	23.98	3.74	1.00	1.73	23.50	5.31	3.74	22.56	27.7
P4301	21.73	7.68	22.87	3.74	1.06	1.73	22.40	5.31	3.74	21.46	37.6
P8701	25.79	11.61	30.35	11.54	24.17	8.25	26.94	15.24	11.18	-	76.0
2-Speed - Double Acting											
P2301M	25.45	6.81	27.44	3.74	1.06	1.50	21.76	4.72	3.54	22.56	32.3
P8701M	25.79	11.61	30.35	11.54	24.17	9.00	26.94	15.24	11.18	-	77.4

** Oil capacity varies by position. Pump can be mounted outlet up or down and does not need to be horizontal*
*** Unit is equipped with a 7/16"-20 Tank Return Port*

Foot Pump

P57 Series - 10,000 PSI

P570FP

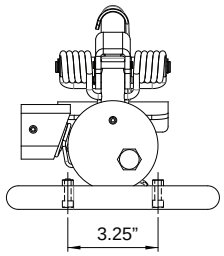

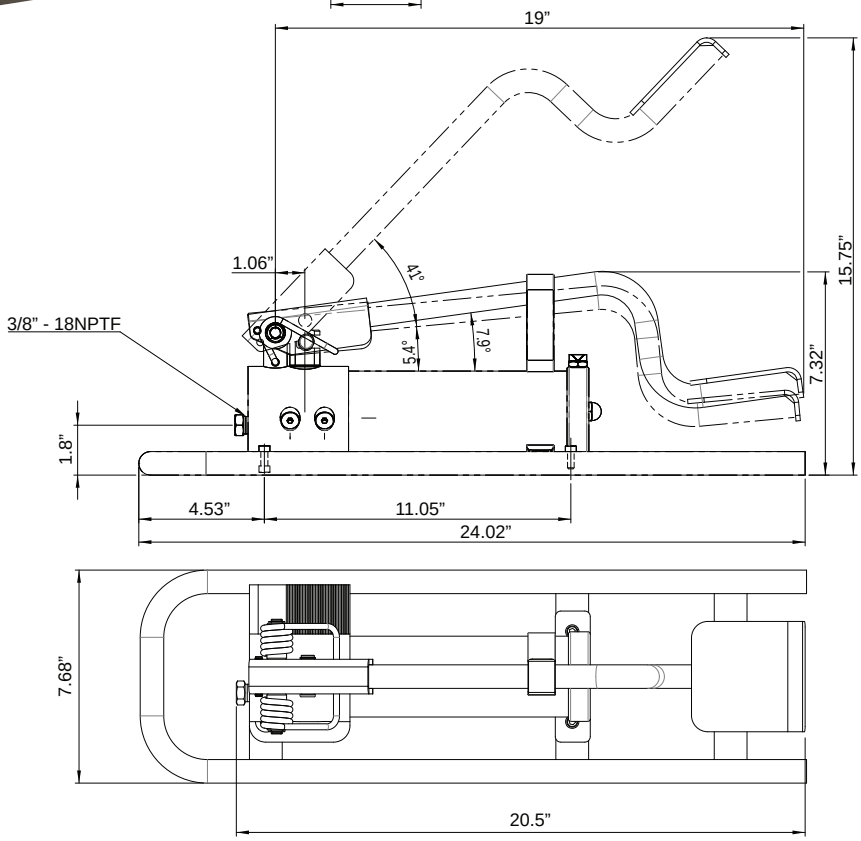

Safety Practices

80%

Good industry practice recommends not exceeding 80% of maximum rated capacities of all our products.

Related Product: Frac/Oil Industry

Our valve seat puller is designed for removal of valve seats. Use the following model number for ordering purposes:

- HVSP125

pg 82

SP5-3814

This combination kit will work well with this product. See our combo section for more details.

HF Kits

Consider using our portable HF kits in conjunction with this pump.

pg 29

Safety Instructions

Visit our DO’S and DON’TS section to review the best methods of operation. Always be prepared.

pg 92

High-Flow Couplers

High-Flow Coupler: CH38F is included on all models (except where specified).

Related Product: Nut Splitters

The HNS nut splitters pair up with this portable foot pump. Our hydraulic nut splitters come in a spacious tool box so its easy to carry around with you from site-to-site. This tool box is large enough to hold small cylinders, saddles, spacers or whatever tool you need to bring with you to your next job site.

Model Number	Nut Size Capacity ATF	Stud Dimension
HNS105	0.625” - 1.4375”	0.4375” - 0.875”
HNS200	1.1875” - 2.375”	7/16” - 7/8”
HNS308	2.625” - 3.5”	1.75” - 2.25”

pg 83

Usable Oil (In^3)	Model Number	Pressure Rating (psi)		Oil Displacement per Stroke (In^3)		Max. Handle Effort (lbs)	Piston Stroke	Weight (Lbs)
		1st Stage	2nd Stage	"1st Stage"	2nd Stage			
30.50	P570FP	200	10,000	0.81	0.14	127.2	0.82	18.0

Rotary Air Pumps

PAR Series - 10,000 PSI Rated

PAR Series

Related Product: Gauges

Reduce the risk of overloading your product by using a gauge. A variety of graduations and types of gauges to suit any need.

pg 69

Related Product: Hoses

We offer a variety of hoses, fittings, lengths and materials.

pg 72

PARD1701

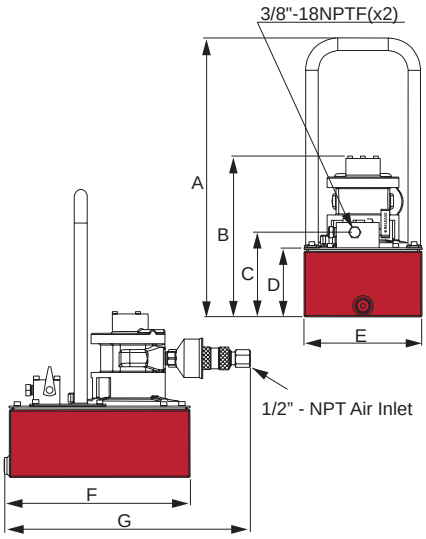

PAR1703 and PAR4003

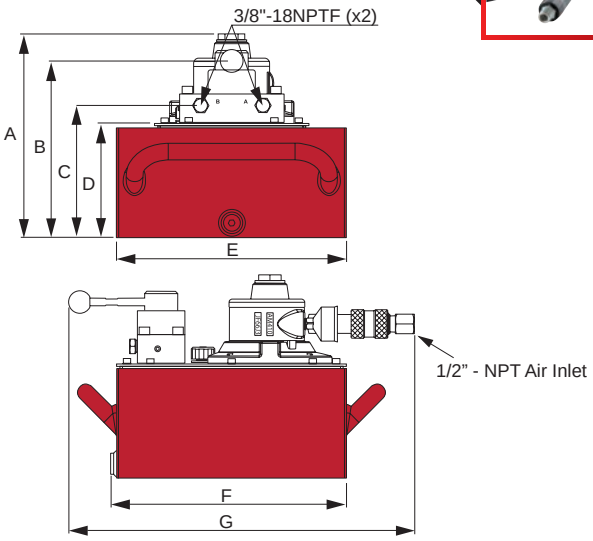

Used with Cylinder	Motor Size (hp)	Usable Oil Capacity (gal)	Model Number	Pressure Rating (psi)	Pressure Rating		Oil Output Flow Rate		Valve Type	Valve Function	Air Pressure Range (psi)
					1st Stage (psi)	2nd Stage (psi)	1st Stage (in³/min)	2nd Stage (in³/min)			
Single Acting	1.7	1	PARD1701	10,000	700	10,000	313	22	Dump	Advance/Return	60 ~ 80
	1.7	3	PARD1703	10,000	700	10,000	313	22	Dump	Advance/Return	60 ~ 80
	1.7	3	PAR1703	10,000	700	10,000	417	22	Manual PW3	Advance/Hold/Return	60 ~ 80
	4	1	PARD4001	10,000	700	10,000	465	70	Dump	Advance/Return	60 ~ 100
	4	3	PARD4003	10,000	700	10,000	465	70	Dump	Advance/Return	60 ~ 100
	4	3	PAR4003	10,000	700	10,000	512	70	Manual PW3	Advance/Hold/Return	60 ~ 100
Double Acting	1.7	3	PARM1703	10,000	700	10,000	417	22	Manual PW4	Advance/Hold/Return	60 ~ 80
	4	3	PARM4003	10,000	700	10,000	512	70	Manual PW4	Advance/Hold/Return	60 ~ 100

Model Number	Air Consumption (cfm)	Max Sound Level (dBA)	Dimensions (in)							Weight (lbs)
			A	B	C	D	E	F	G	
PARD1701	44	93	19.10	9.39	5.79	4.72	8.07	12.34	15.90	42.0
PARD1703	44	93	-	11.95	8.35	7.28	12.01	12.34	17.96	54.0
PAR1703	44	93	11.94	10.53	8.21	7.28	12.01	12.34	18.08	55.0
PARD4001	95	100	19.10	11.00	5.79	4.72	8.07	12.34	16.34	54.0
PARD4003	95	100	-	13.56	8.35	7.28	12.01	12.34	18.40	66.0
PAR4003	95	100	13.55	10.53	8.21	7.28	12.01	12.34	18.52	67.0
PARM1703	44	93	11.94	10.53	8.21	7.28	12.01	12.34	18.08	55.0
PARM4003	95	100	13.55	10.53	8.21	7.28	12.1	12.34	18.52	67.0

Air Pumps

Air Actuated Power

PA Series

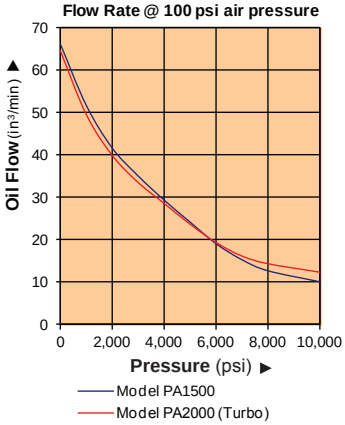

Air Consumption= 7.8cfm

Product Information

- Metal reservoirs resist cracking
- US Patent No. 5,946,912, a built in bypass device protects the hydraulic system from over pumping damage
- A compact yet powerful Air Turbo Motor US Patent No. 5,341,723
- Suggested air inlet range: 110-175 psi / 7.6-12.1 bar
- Maximum working pressure: 10,000 psi / 700 Bar

PA1500A Pressure Adjustment

PA1500A Pressure can be adjusted externally from 1,000 to 10,000 psi.

Model Number	Usable Oil Capacity	Oil Outlet Port	Output Flow Rate		Input Air Pressure Required (psi)	Air Consumption (cfm)	Reservoir Construction
			No Load (in³/min)	Load (in³/min)			
Single Acting							
PA600	36.6	⅜"-18 NPTF	61	9	110-175	7.8	Steel
PA600H	36.6	⅜"-18 NPTF	61	9	110-175	7.8	Steel
PA1500	91.5	⅜"-18 NPTF	66	11	110-175	7.8	Aluminum
PA1500A*	91.5	⅜"-18 NPTF	66	11	110-175	7.8	Aluminum
PA1500L**	91.5	⅜"-18 NPTF	61	10	110-175	7.8	Aluminum
PA2000	122.1	⅜"-18 NPTF	65	12	110-175	7.8	Aluminum
PA3801	231.9	⅜"-18 NPTF	65	11	110-175	7.8	Steel
PA3801L**	231.9	⅜"-18 NPTF	61	10	110-175	7.8	Steel
PA7550	460.6	⅜"-18 NPTF	65	11	110-175	7.8	Steel
Double Acting							
PA1500M	91.5	⅜"-18 NPTF	66	11	110-175	7.8	Aluminum
PA3801M	231.9	⅜"-18 NPTF	65	11	110-175	7.8	Steel
PA7550M	460.6	⅜"-18 NPTF	65	11	110-175	7.8	Steel

** This unit is equipped with an external pressure adjustment (1,000-10,000psi)*
***These pumps are equipped with a hand held air powered pendant*

PA Series

PA600

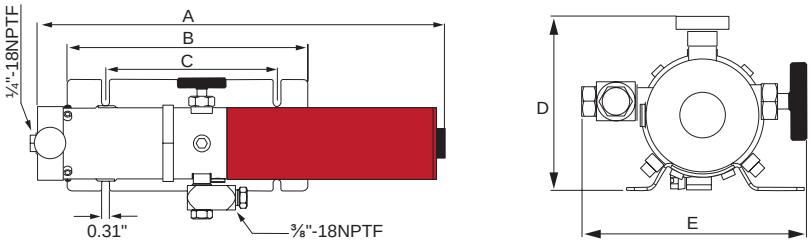

PA1500

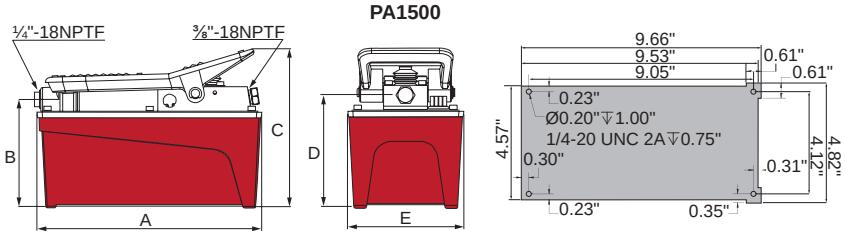

PA1500L

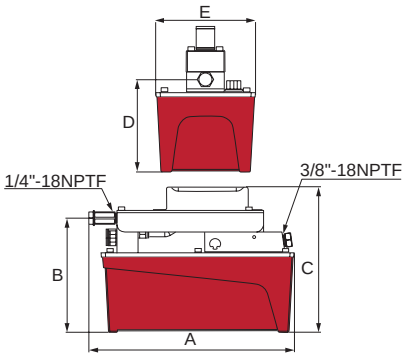

PA1500M

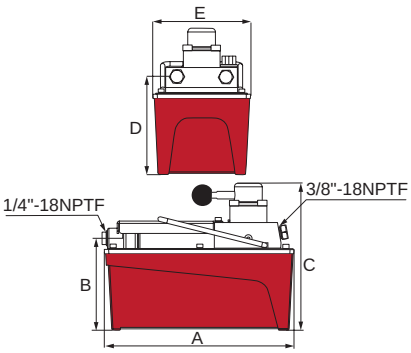

PA3801 and PA7550

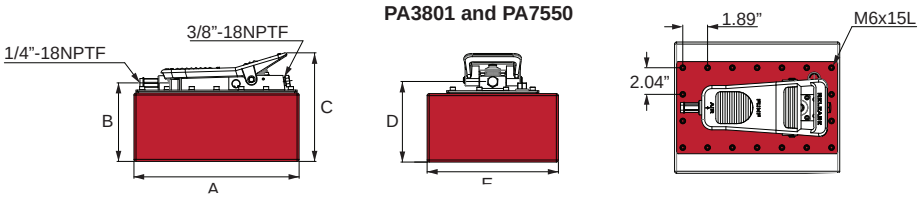

FRL-145

Use in compressed air lines upstream of all PA series air/hydraulic pumps to provide clean filtered (5um), lubricated air source to ensure long air motor life. Assembly is equipped with a metal bowl with sight glass and a 0-145 PSIG pressure gauge. 145 PSIG maximum working pressure. 3/8" NPT Ports. Use Class-1 Turbine Oil (ISO VG32).

AD-145

Use in compressed air lines upstream of BVA FRL-145 and all PA series air/hydraulic pumps to remove 99% of free water from the air line to ensure long air motor life. 145 PSIG maximum working pressure. 3/8" NPT Ports.

Related Product: Hoses

We offer a variety of hoses, fittings, lengths and materials.

pg 72

Air Pump Combo

Most air pumps are available in easy to order kits: pump, gauge, coupler, hose and cylinder

pg 64

Model Number	Base Mounting Holes	Dimensions (in)					Weight w/ Oil (lbs)
		A	B	C	D	E	
Single Acting							
PA600	yes	16.77	9.84	7.01	6.18	5.59	14.1
PA600H	yes	16.77	9.84	7.01	4.49	5.75	12.5
PA1500	yes	10.35	5.00	7.28	5.16	5.35	18.1
PA1500A*	yes	10.35	5.00	7.28	5.16	5.35	18.1
PA1500L**	yes	10.96	6.30	8.03	5.12	5.35	19.4
PA2000	yes	12.64	6.42	8.15	5.20	7.36	20.1
PA3801	no	12.64	5.08	7.36	5.24	7.36	27.1
PA3801L**	no	12.64	6.42	8.15	5.20	7.36	30.4
PA7550	no	12.64	5.00	8.31	6.14	8.43	36.0
Double Acting							
PA1500M	yes	10.51	5.00	7.99	5.35	5.35	19.1
PA3801M	no	12.64	5.04	8.03	5.31	7.36	24.0
PA7550M	no	12.64	5.98	9.02	6.34	10.04	40.0

** Unit is equipped with an external pressure adjustment (1,000-10,000psi)*
***These pumps are equipped with a hand held air powered pendant*

Electric Pumps

PE30, PE40, PE50 Series
- Single Phase

PE50W4N03A

- Meets OSHA regulations for sound (80dBA)
- 2 Stage pumps provide fast run up before the high pressure stage
- Suction strainers screen out contamination to prevent pump damage
- All units are wired as 120 VAC 60 Hz; Optional wiring includes 50 Hz motors and 240 VAC 60 Hz
- 100% Duty Cycle, NEMA 5 Enclosure TEFC motors
- All hand pendants are wired 24 VAC for safety
- Starts under full load

	Use with Cylinder Type		Flow Rate				Motor Size
			1st Stage		2nd Stage		
			in³/min	psi	in³/min	psi	
Dump Manual Valve w/10 ft. Motor Pendant							
	2W/2P Advance/Return	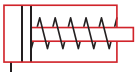	293	350	18	10,000	0.5 Hp
			311	700	37	10,000	1.0 Hp
			476	700	61	10,000	1.5 Hp
Dump Solenoid Valve w/10 ft. Pendant							
	2W/2P Advance /Return (Auto*)	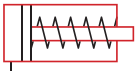	293	350	18	10,000	0.5 Hp
			311	700	37	10,000	1.0 Hp
			476	700	61	10,000	1.5 Hp
	3W/2P Advance /Return**	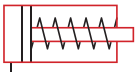	293	350	18	10,000	0.5 Hp
			311	700	37	10,000	1.0 Hp
			476	700	61	10,000	1.5 Hp
Manual Valve							
	3W/3P Advance /Hold Return	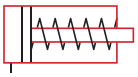	293	350	18	10,000	0.5 Hp
			311	700	37	10,000	1.0 Hp
			476	700	61	10,000	1.5 Hp
	4W/3P Advance /Hold/Return		293	350	18	10,000	0.5 Hp
			311	700	37	10,000	1.0 Hp
			476	700	61	10,000	1.5 Hp
Manual Valve w/10 ft. Motor Pendant							
	3W/3P Advance /Hold Return	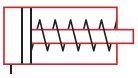	293	350	18	10,000	0.5 Hp
			311	700	37	10,000	1.0 Hp
			476	700	61	10,000	1.5 Hp
	4W/3P Advance /Hold/Return		293	350	18	10,000	0.5 Hp
			311	700	37	10,000	1.0 Hp
			476	700	61	10,000	1.5 Hp
Solenoid Valve w/10 ft. Pendant & Locking Plate							
	3W/3P Advance /Hold Return	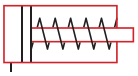	293	350	18	10,000	0.5 Hp
			311	700	37	10,000	1.0 Hp
			476	700	61	10,000	1.5 Hp
	4W/3P Advance /Hold/Return		293	350	18	10,000	0.5 Hp
			311	700	37	10,000	1.0 Hp
			476	700	61	10,000	1.5 Hp

** Advance position holds pressure with motor running or off. Return retracts cylinder with motor off*
*** Advance position holds pressure with motor running and cylinder Returns when button is released.*

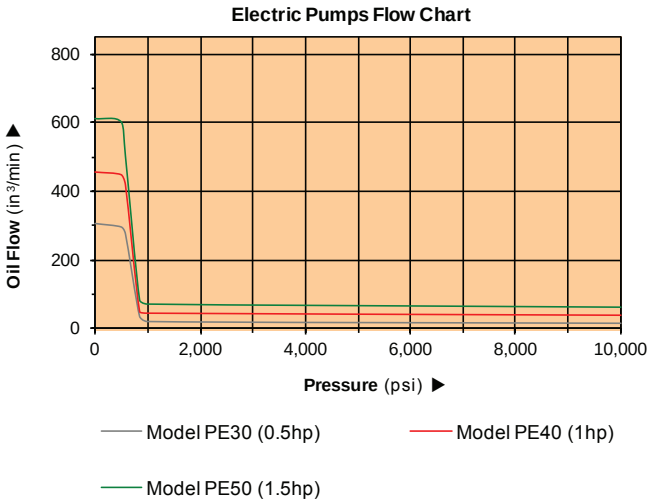

PE Series

80%

Safety Practices

Good industry practice recommends not exceeding 80% of maximum rated capacities of all our products.

Usable Oil Capacity						
1 Gal	2 Gal	3 Gal	5 Gal	10 Gal	15 Gal	25 Gal
Model Number	Model Number	Model Number	Model Number	Model Number	Model Number	Model Number
Dump Manual Valve w/10 ft. Motor Pendant						
PE30DMP01A	PE30DMP02A	PE30DMP03A	-	-	-	-
-	PE40DMP02A	PE40DMP03A	PE40DMP05A	PE40DMP10A	-	-
-	-	PE50DMP03A	PE50DMP05A	PE50DMP10A	PE50DMP15A	PE50DMP25A
Dump Solenoid Valve w/10 ft. Pendant						
PE30H2S01A	PE30H2S02A	PE30H2S03A	-	-	-	-
-	PE40H2S02A	PE40H2S03A	PE40H2S05A	PE40H2S10A	-	-
-	-	PE50H2S03A	PE50H2S05A	PE50H2S10A	PE50H2S15A	PE50H2S25A
PE30DSP01A	PE30DSP02A	PE30DSP03A	-	-	-	-
-	PE40DSP02A	PE40DSP03A	PE40DSP05A	PE40DSP10A	-	-
-	-	PE50DSP03A	PE50DSP05A	PE50DSP10A	PE50DSP15A	PE50DSP25A
Manual Valve						
PE30M3N01A	PE30M3N02A	PE30M3N03A	-	-	-	-
-	PE40M3N02A	PE40M3N03A	PE40M3N05A	PE40M3N10A	PE40M3N15A	PE40M3N25A
-	-	PE50M3N03A	PE50M3N05A	PE50M3N10A	PE50M3N15A	PE50M3N25A
PE30M4N01A	PE30M4N02A	PE30M4N03A	-	-	-	-
-	PE40M4N02A	PE40M4N03A	PE40M4N05A	PE40M4N10A	PE40M4N15A	PE40M4N25A
-	-	PE50M4N03A	PE50M4N05A	PE50M4N10A	PE50M4N15A	PE50M4N25A
Manual Valve w/10 ft. Motor Pendant						
PE30W3N01A	PE30W3N02A	PE30W3N03A	-	-	-	-
-	PE40W3N02A	PE40W3N03A	PE40W3N05A	PE40W3N10A	PE40W3N15A	PE40W3N25A
-	-	PE50W3N03A	PE50W3N05A	PE50W3N10A	PE50W3N15A	PE50W3N25A
PE30W4N01A	PE30W4N02A	PE30W4N03A	-	-	-	-
-	PE40W4N02A	PE40W4N03A	PE40W4N05A	PE40W4N10A	PE40W4N15A	PE40W4N25A
-	-	PE50W4N03A	PE50W4N05A	PE50W4N10A	PE50W4N15A	PE50W4N25A
Solenoid Valve w/10 ft. Pendant & Locking Plate						
PE30S3L01A	PE30S3L02A	PE30S3L03A	-	-	-	-
-	PE40S3L02A	PE40S3L03A	PE40S3L05A	PE40S3L10A	PE40S3L15A	PE40S3L25A
-	-	PE50S3L03A	PE50S3L05A	PE50S3L10A	PE50S3L15A	PE50S3L25A
PE30S4L01A	PE30S4L02A	PE30S4L03A	-	-	-	-
-	PE40S4L02A	PE40S4L03A	PE40S4L05A	PE40S4L10A	PE40S4L15A	PE40S4L25A
-	-	PE50S4L03A	PE50S4L05A	PE50S4L10A	PE50S4L15A	PE50S4L25A

** Advance position holds pressure with motor running or off. Return retracts cylinder with motor off*
*** Advance position holds pressure with motor running and cylinder Returns when button is released.*

Electric Pumps

Electric Power Source

PE50M4N03A

PE30 Series

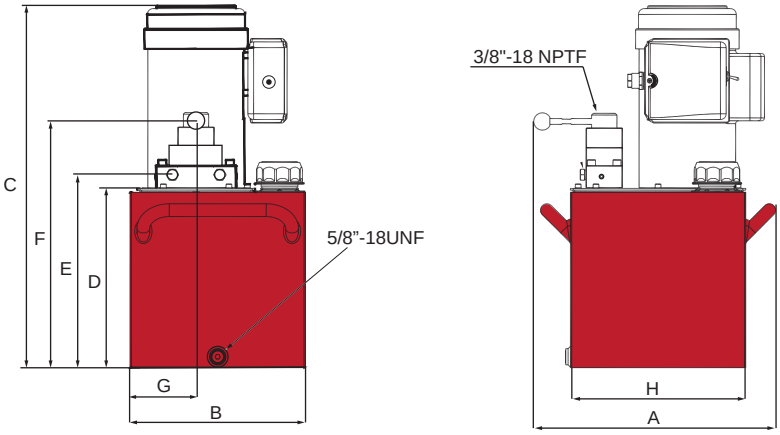

PE40/PE50 Series

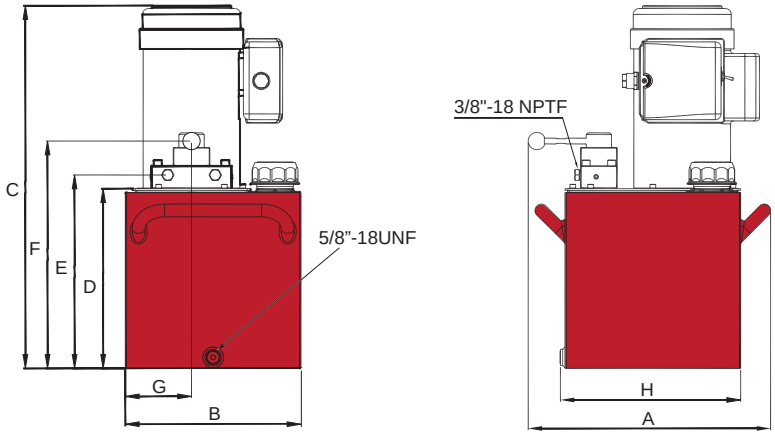

PE40/PE50 Series With Casters

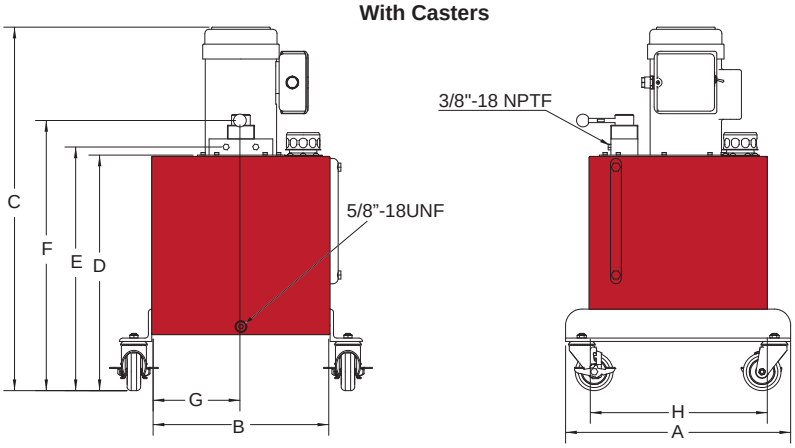

Pump Accessories

See the assortment of accessories designed to work with these pumps.

pg 69

Safety Practices

Good industry practice recommends not exceeding 80% of maximum rated capacities of all our products.

Safety Instructions

Visit our DO'S and DON'TS section to review the best methods of operation. Always be prepared.

pg 92

Pressure Settings

Custom pressure settings available upon request. Contact your local BVA dealer.

Reservoir Sizing

Recommended reservoir sizing is Extended Cylinder + Hose Volume Oil Capacity x 1.3

Reservoir Size	Dimensional Table (in)								Pump Weight by Series* (lbs)		
	A	B	C	D	E	F	G	H	PE30	PE40	PE50
1 Gal	12.7	10.3	19.1	4.7	5.7	12.0	8.1	12.4	61.0	-	-
2 Gal	16.7	12.0	17.9	6.0	6.9	13.2	4.5	12.4	75.0	72.0	-
3 Gal	16.7	12.0	19.7	7.2	8.2	10.5	4.5	12.4	84.0	81.0	91.0
5 Gal	16.7	12.0	24.8	12.3	13.2	15.5	4.5	12.4	-	102.0	112.0
10 Gal	20.9	16.5	31.5	19.0	19.9	22.3	8.3	16.5	-	184.0	194.0
15 Gal	20.9	16.5	34.6	22.1	23.1	25.4	8.3	16.5	-	255.0	265.0
25 Gal	25.6	21.3	34.6	22.1	23.1	25.4	10.6	21.3	-	362.0	372.0

** Pump weights include oil.*

Single Phase Pump Matrix Chart

If you don't see a pump that would fit your application needs, you can custom build a pump to your desired specifications. Use this Pump Matrix Chart as a guide for creating your very own custom built Electric Pump. For assistance in building your pump, call your local BVA Representative.

P	E	30	S4L	02	A	-	A	G
1 Product Type	*2* Motor Type	*3* Flow Group	*4* Valve Type /Operation	*5* Reservoir Size	*6* Voltage		*7* Pump Options	

1 - Product Type

P	Pump

2 - Motor Type

E	Induction Electric Motor, TEFC

3 - Flow Group

30	293/18 in3/min @ 350/10,000 psi, 0.5 Hp
40	311/37 in3/min @ 700/10,000 psi, 1.0 Hp
50	476/61 in3/min @ 700/10,000 psi, 1.5 Hp

4 - Valve Type/Operation

CMR	Pump Mounted Manifold Block - Pressure & Return Ports Only
WMR	CMR Block w/10ft Motor Control Pendant
DMP	Dump Valve w/motor pendant 2W/2P
DSP	Dump Solenoid Valve w/pendant 3W/2P (Spool Type Valve)
H2S	Solenoid Valve 2W/2P - Pendant Control On/Off Only (Poppet Type Valve)
M2N	Manual Valve 3W/2P
M3N	Manual Valve 3W/3P
M4N	Manual Valve 4W/3P
M3L	Manual Valve 3W/3P w/Locking Plate
M4L	Manual Valve 4W/3P w/Locking Plate
W2N	Manual Valve 3W/2P w/10ft Motor Control Pendant
W3N	Manual Valve 3W/3P w/10ft Motor Control Pendant
W4N	Manual Valve 4W/3P w/10ft Motor Control Pendant
W3L	Manual Valve 3W/3P w/Locking Plate and 10ft Motor Control Pendant
W4L	Manual Valve 4W/3P w/Locking Plate and 10ft Motor Control Pendant
S3N	Solenoid Valve 3W/3P (Spool Type)
S4N	Solenoid Valve 4W/3P (Spool Type)
S3L	Solenoid Valve 3W/3P w/Locking Plate (Spool Type Valve)
S4L	Solenoid Valve 4W/3P w/Locking Plate (Spool Type Valve)

5 - Reservoir Size

01	1 Gallon
02	2 Gallons
03	3 Gallons
05	5 Gallons
10	10 Gallons
15	15 Gallons
25	25 Gallons

6 - Voltage

A	120V 1 ph 60 Hz - US Plug NEMA 5-15P
D	230V 1 ph 50 Hz - European Plug
E	240V 1 ph 60 Hz - No Plug

7 - Pump Options

A	External Pressure Adjustment Block (available on any models with 3W/3P or 4W/3P)
G	Gauge w/Gauge Adapter 0-15,000 psi 2-1/2" Wet - Installed "A" Port
M	Intermittent Motor Option (available on solenoid equipped models only EXCEPT H2S option)
P	Pressure Switch (available on solenoid equipped models only)
U	Foot Control Switch (available on solenoid equipped models only)
W	Wireless Control (available on solenoid equipped models only)

Not all options are available in all configurations. Table is for reference only. Please consult your local BVA dealer if you want to order a custom pump or if you have questions.

PE Series

Ordering Example

PE30S4L02A-A

After reviewing this model number, we know that the pump has the following specifications:

- Electric power source
- ½ Hp flow group
- Solenoid Valve w/Locking Plate 4W/3P
- 2 gallon reservoir tank
- External Pressure Adjustment Block

PE30S4L02A-A

Related Product: Gauges

Reduce the risk of overloading your product by using a gauge. A variety of graduations and types to suit any need.

pg 69

Safety Instructions

Visit our DO'S and DON'TS section to review the best methods of operation. Always be prepared.

pg 92

Related Product: Hoses

We offer a variety of hoses, fittings, lengths and materials.

pg 72

3-Phase Electric Pumps

Electric Power Source

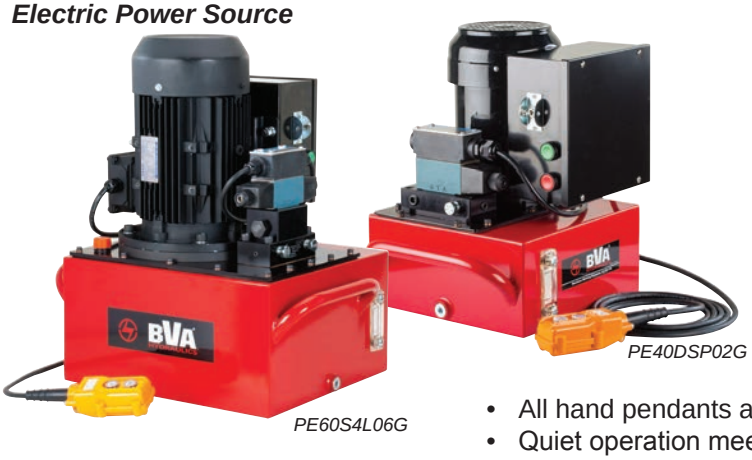

PE40DSP02G

PE60S4L06G

Pressure Settings
Custom pressure settings available upon request. Contact your local BVA dealer.

Safety Instructions
Visit our DO'S and DON'TS section to review the best methods of operation. Always be prepared.
pg 92

- All hand pendants are wired with 24 VAC
- Quiet operation meets OSHA regulations (80dBA)
- 2 speed operation allows for faster cylinder advance
- Full load starting capacities
- Internal suction strainer keeps contamination from damaging pump
- Rugged durable design meets the demands of industrial applications
- Precision components to minimize wear and improve overall dependability
- Motors are rated 50/60 Hz for voltage
- Reservoirs equipped with sight level gauges
- PE40 models are standard as 240 VAC 60 Hz
- PE60 Models are standard as 480 VAC 60 Hz

	Use with Cylinder Type		Flow Rate				Motor Size***
			1st Stage		2nd Stage		
			in³/min	psi	in³/min	psi	
Dump Solenoid Valve w/10 ft. Pendant							
	2W/2P Advance/Return (Auto*)	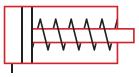	311	700	37	10,000	1.0 Hp
			592	700	110	10,000	3.0 Hp
	3W/2P Advance/Return**	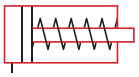	311	700	37	10,000	1.0 Hp
			592	700	110	10,000	3.0 Hp
Manual Valve							
	3W/3P Advance/Hold Return	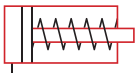	311	700	37	10,000	1.0 Hp
			592	700	110	10,000	3.0 Hp
	4W/3P Advance/Hold/Return		311	700	37	10,000	1.0 Hp
			592	700	110	10,000	3.0 Hp
Solenoid Valve w/10 ft. Pendant & Locking Plate							
	3W/3P Advance/Hold Return	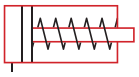	311	700	37	10,000	1.0 Hp
			592	700	110	10,000	3.0 Hp
	4W/3P Advance/Hold/Return	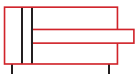	311	700	37	10,000	1.0 Hp
			592	700	110	10,000	3.0 Hp

** Advance position holds pressure with motor running or off. Return retracts cylinder with motor off*
*** Advance position holds pressure with motor running and cylinder Returns when button is released.*
**** Standard voltage on the 1 Hp pump is 208-240 VAC 60 Hz; 3 Hp pump is 460-480 VAC 60 Hz*

40 Gallon Reservoir Features

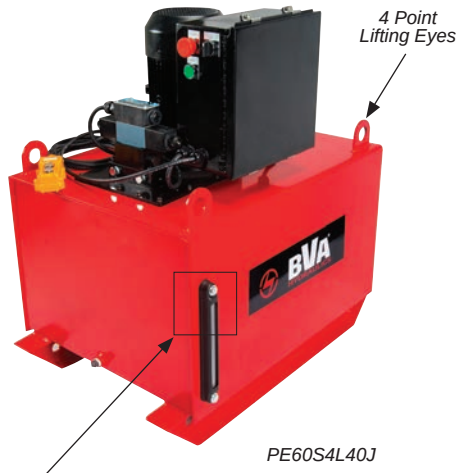

PE60S4L40J

The 40-Gallon Reservoir is fabricated with a baffle separating return oil from suction oil. Comes standard with an aluminum sight and temperature gauge.

PE Series

Safety Practices

80%

Good industry practice recommends not exceeding 80% of maximum rated capacities of all our products.

Related Product: Gauges

Reduce the risk of overloading your product by using a gauge. A variety of graduations and types to suit any need.

pg 69

Additional Voltages

Additional voltage options are available, see part number matrix for options

pg 59

Usable Oil Capacity							
2 Gal	3 Gal	5 Gal	6 Gal	10 Gal	15 Gal	25 Gal	40 Gal
Model Number							
Dump Solenoid Valve w/10 ft. Pendant							
PE40H2S02G	PE40H2S03G	PE40H2S05G	-	PE40H2S10G	PE40H2S15G	PE40H2S25G	-
-	-	-	PE60H2S06J	PE60H2S10J	PE60H2S15J	-	PE60H2S40J
PE40DSP02G	PE40DSP03G	PE40DSP05G	-	PE40DSP10G	PE40DSP15G	PE40DSP25G	-
-	-	-	PE60DSP06J	PE60DSP10J	PE60DSP15J	-	PE60DSP40J
Manual Valve							
PE40M3N02G	PE40M3N03G	PE40M3N05G	-	PE40M3N10G	PE40M3N15G	PE40M3N25G	-
-	-	-	PE60M3N06J	PE60M3N10J	PE60M3N15J	-	PE60M3N40J
PE40M4N02G	PE40M4N03G	PE40M4N05G	-	PE40M4N10G	PE40M4N15G	PE40M4N25G	-
-	-	-	PE60M4N06J	PE60M4N10J	PE60M4N15J	-	PE60M4N40J
Solenoid Valve w/10 ft. Pendant & Locking Plate							
PE40S3L02G	PE40S3L03G	PE40S3L05G	-	PE40S3L10G	PE40S3L15G	PE40S3L25G	-
-	-	-	PE60S3L06J	PE60S3L10J	PE60S3L15J	-	PE60S3L40J
PE40S4L02G	PE40S4L03G	PE40S4L05G	-	PE40S4L10G	PE40S4L15G	PE40S4L25G	-
-	-	-	PE60S4L06J	PE60S4L10J	PE60S4L15J	-	PE60S4L40J

** Advance position holds pressure with motor running or off. Return retracts cylinder with motor off*
*** Advance position holds pressure with motor running and cylinder Returns when button is released.*
**** Standard voltage on the 1 Hp pump is 208-240 VAC 60 Hz; 3 Hp pump is 460-480 VAC 60 Hz*

3-Phase Electric Pumps

Electric Power Source

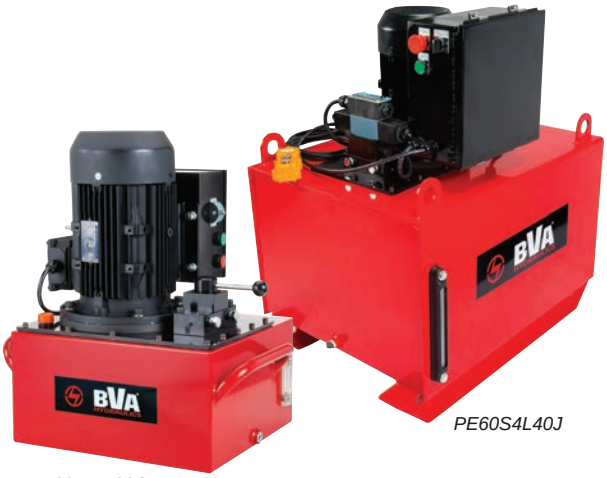

PE60S4L40J

PE60M4N06G

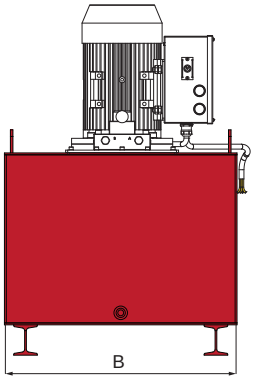

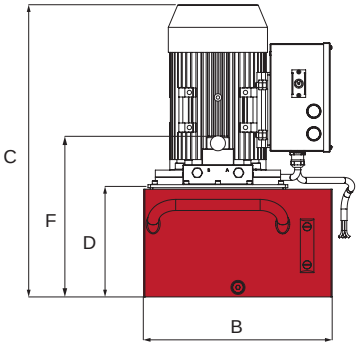

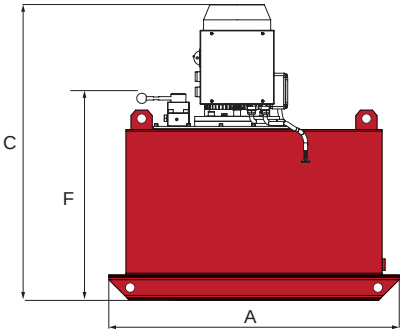

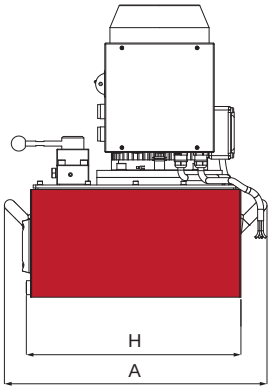

80%

Safety Practices

Good industry practice recommends not exceeding 80% of maximum rated capacities of all our products.

Related Product: Gauges

Reduce the risk of overloading your product by using a gauge. A variety of graduations and types to suit any need.

pg 69

Pressure Settings

Custom pressure settings available upon request. Contact your local BVA dealer.

Reservoir Size	Dimensional Table (in.)						Pump Weight by Series* (lbs.)
	A	B	C	D	F	H	PE40
2 Gal	16.65	12.01	21.00	5.98	13.16	12.36	72.0
3 Gal	16.65	12.01	22.25	7.24	10.51	12.36	81.0
5 Gal	16.65	12.01	27.25	12.28	15.53	12.36	102.0
10 Gal	20.87	16.54	28.25	18.98	22.25	16.54	184.0
15 Gal	20.87	16.54	37.25	22.13	25.40	16.54	255.0
25 Gal	25.59	21.26	39.25	22.13	25.40	21.26	362.0

Reservoir Size	Dimensional Table (in.)						Pump Weight by Series* (lbs.)
	A	B	C	D	F	H	PE60
6 Gal	20.63	14.80	22.95	8.82	16.04	16.87	187.0
10 Gal	27.13	19.53	24.82	11.75	17.91	23.13	348.0
15 Gal	27.13	23.46	24.82	11.75	17.91	23.13	396.0
40 Gal	34.50	23.13	38.58	24.00	31.67	-	628.0

** Pump weights include oil.*

3-Phase Pump Matrix Chart

If you don't see a pump that would fit your application needs, you can custom build a pump to your desired specifications. Use this Pump Matrix Chart as a guide for creating your very own custom built Electric Pump. For assistance in building your pump, call your local BVA Representative.

P	E	40	DSP	02	G	-	A	G
1	*2*	*3*	*4*	*5*	*6*		*7*	
Product Type	*Motor Type*	*Flow Group*	*Valve Type /Operation*	*Reservoir Size*	*Voltage*		*Pump Options*	

1 - Product Type

P	Pump

2 - Motor Type

E	Induction Electric Motor, TEFC

3 - Flow Group

40	311/37 in^3/min @ 700/10,000 psi, 1.0 Hp
60	592/110 in^3/min @ 700/10,000 psi, 3.0 Hp

4 - Valve Type/Operation

CMR	Pump Mounted Manifold Block - Pressure & Return Ports Only
DSP	Dump Solenoid Valve w/pendant 3W/2P (Spool Type Valve)
H2S	Solenoid Valve 2W/2P - Pendant Control On/Off Only (Poppet Type Valve)
M2N	Manual Valve 3W/2P
M3N	Manual Valve 3W/3P
M4N	Manual Valve 4W/3P
M3L	Manual Valve 3W/3P w/Locking Plate
M4L	Manual Valve 4W/3P w/Locking Plate
S3N	Solenoid Valve 3W/3P (Spool Type)
S4N	Solenoid Valve 4W/3P (Spool Type)
S3L	Solenoid Valve 3W/3P w/Locking Plate (Spool Type Valve)
S4L	Solenoid Valve 4W/3P w/Locking Plate (Spool Type Valve)

5 - Reservoir Size

02	2 Gallon
03	3 Gallons
05	5 Gallons
06	6 Gallons
10	10 Gallons
15	15 Gallons
25	25 Gallons
40	40 Gallons

6 - Voltage

G	208-240V 3 ph 60 Hz - No Plug
W	380-415V 3 ph 50 Hz - No Plug
J	460-480V 3 ph 60 Hz - No Plug or Wire

7 - Pump Options

A	External Pressure Adjustment Block *(available on any models with 3W/3P or 4W/3P)*
G	Gauge w/Gauge Adapter 0-15,000 psi 2-1/2" Wet - Installed "A" Port
P	Pressure Switch *(available on solenoid equipped models only)*
U	Foot Control Switch *(available on solenoid equipped models only)*
W	Wireless Control *(available on solenoid equipped models only)*

Not all options are available in all configurations. Table is for reference only. Please consult your local BVA dealer if you want to order a custom pump or if you have questions.

PE Series

Ordering Example

PE40DSP02G

After reviewing this model number, we know that the pump has the following specifications:

- Electric power source
- 1 Hp flow group
- Dump Solenoid Valve w/Pendant 3W/2P
- 2 gallon reservoir tank
- 208-240V 3 ph 60 Hz Voltage - No Plug

PE40DSP02G

Pump Accessories

See the assortment of accessories designed to work with these pumps.

pg 69

Safety Instructions

Visit our DO'S and DON'TS section to review the best methods of operation. Always be prepared.

pg 92

Related Product: Hoses

We offer a variety of hoses, fittings, lengths and materials.

pg 72

Gas and Diesel Pumps

PG/PD Series - Portable Power

PG70M4N05

PD80S4L05

PG90S4L10

Safety Practices

80%

Good industry practice recommends not exceeding 80% of maximum rated capacities of all our products.

Safety Instructions

Visit our DO'S and DON'TS section to review the best methods of operation. Always be prepared.

pg 92

Related Product: Gauges

Reduce the risk of overloading your product by using a gauge. A variety of graduations and types to suit any need.

pg 69

Related Product: Hoses

We offer a variety of hoses, fittings, lengths and materials.

pg 72

Gas Pumps

- Gas engine pumps will provide 10,000 psi at remote locations
- Industrial grade 5.5 or 10.2 hp Honda Gas Engine
- Ideal for applications at remote locations
- Two speed pump designed for rapid cylinder advance
- Gas pump features a sturdy protective roll cage for use in the toughest environments
- Manual control valve for use with single or double acting cylinders or tools
- Optional electric start

Diesel Pumps

- Diesel engine pumps will provide 10,000 psi at remote locations
- Industrial grade 7.3 hp HATZ Diesel engine
- Locking solenoid control valve for use with single or double acting cylinders or tools
- Two speed pump designed for rapid cylinder advance
- Pump features a sturdy protective roll cage for use in the toughest environments
- Ideal for application when diesel fuel in remote environments is required
- Comes standard with electric start

Valve Function	Valve Type	Use with Cylinder Type	Flow Rate			
			1st Stage		2nd Stage	
			in^3/min	psi	in^3/min	psi
3W/3P Advance/Hold Return	Manual	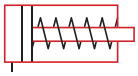	427	700	100	10,000
	Solenoid		600	700	200	10,000
	Solenoid		600	700	200	10,000
4W/3P Advance/Hold Return	Manual	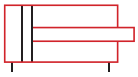	427	700	100	10,000
	Solenoid		600	700	200	10,000
	Solenoid		600	700	200	10,000

Gas/Diesel Pump Matrix Chart

If you don't see a pump that would fit your application needs, you can custom build a pump to your desired specifications. Use this Pump Matrix Chart as a guide for creating your very own custom gas/diesel pump. For assistance in building your pump, call your local BVA Representative.

P	G	90	S4L	10	-	A	G
1 Product Type	*2* Motor Type	*3* Flow Group	*4** Valve Type /Operation	*5* Reservoir Size		*7* Pump Options	

1 - Product Type

P	Pump

2 - Motor Type

G	Gas Motor
D	Diesel Motor

3 - Flow Group

70	427/100 in³/min @ 700/10,000 psi, 5.5 Hp
80	600/200 in³/min @ 700/10,000 psi, 7.3 Hp
90	1070/200 in³/min @ 700/10,000 psi, 10.2 Hp

4* - Valve Type/Operation

CMR	Pump Mounted Manifold Block - Pressure & Return Ports Only
DSP	Dump Solenoid Valve w/pendant 3W/2P (Spool Type Valve)
H2S	Solenoid Valve 2W/2P - Pendant Control On/Off Only (Poppet Type Valve)
M2N	Manual Valve 3W/2P
M3N	Manual Valve 3W/3P
M4N	Manual Valve 4W/3P
M3L	Manual Valve 3W/3P w/Locking Plate
M4L	Manual Valve 4W/3P w/Locking Plate
S3N	Solenoid Valve 3W/3P (Spool Type)
S4N	Solenoid Valve 4W/3P (Spool Type)
S3L	Solenoid Valve 3W/3P w/Locking Plate (Spool Type Valve)
S4L	Solenoid Valve 4W/3P w/Locking Plate (Spool Type Valve)

5 - Reservoir Size

5	5 Gallons
10	10 Gallons
15	15 Gallons
25	25 Gallons
40	40 Gallons

6 - Pump Options

A	External Pressure Adjustment Block *(available on any models with 3W/3P or 4W/3P)*
G	Gauge w/Gauge Adapter 0-15,000 psi 2-1/2" Wet - Installed "A" Port
P	Pressure Switch *(available on solenoid equipped models only)*
E	Foot Control Switch *(available on solenoid equipped models only)*
W	Wireless Control *(available on solenoid equipped models only)*

* Solenoid options are not available on the PG70 Series Gas Pumps

Not all options are available in all configurations. Table is for reference only. Please consult your local BVA dealer if you want to order a custom pump or if you have questions.

PG/PD Series

Ordering Example

PG90S4L10

After reviewing this model number, we know that the pump has the following specifications:

- Gasoline power source
- 10.2 Hp flow group
- Solenoid Valve w/Locking Plate 4W/3P
- 10 gallon reservoir tank

PG90S4L10

Roll Cages

All gas and diesel pumps are equipped with roll cages to prevent any damage that might occur on a job site.

Wireless Controller

PG90 and **PD80** pumps have an optional wireless controller. Visit the gas/diesel pump matrix and pump accessories page for more details.

pg 71

Optional Electric Start

PG90 has an optional electric start.
PD80 comes standard with an electric start.
Refer to the Gas/Diesel Pump Matrix.

Motor HP / Type	Usable Oil Capacity			
	5 Gallons	10 Gallons	15 Gallons	40 Gallons
	Model Number	Model Number	Model Number	Model Number
Gas - 5.5 Hp Honda	PG70M3N05	-	-	-
Gas - 10.2 Hp Honda	PG90S3L05	PG90S3L10	PG90S3L15	PG90S3L40
Diesel - 7.3 Hp HATZ	PD80S3L05	PD80S3L10	PD80S3L15	PD80S3L40
Gas - 5.5 Hp Honda	PG70M4N05	-	-	-
Gas - 10.2 Hp Honda	PG90S4L05	PG90S4L10	PG90S4L15	PG90S4L40
Diesel - 7.3 Hp HATZ	PD80S4L05	PD80S4L10	PD80S4L15	PD80S4L40

Gas and Diesel Pumps

PG70/PG90/PD80 Series

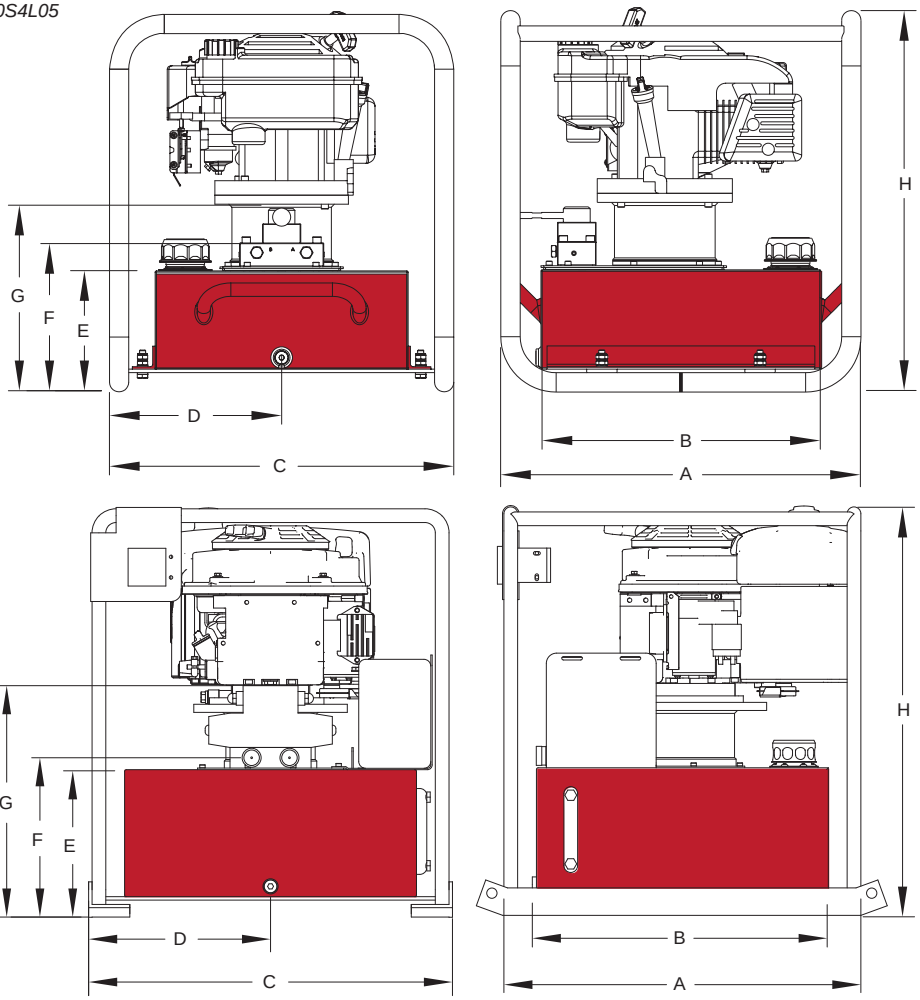

80%

Safety Practices

Good industry practice recommends not exceeding 80% of maximum rated capacities of all our products.

Related Product: Gauges

Reduce the risk of overloading your product by using a gauge. A variety of graduations and types to suit any need.

pg 69

Safety Instructions

Visit our DO'S and DON'TS section to review the best methods of operation. Always be prepared.

pg 92

Related Product: Hoses

We offer a variety of hoses, fittings, lengths and materials.

pg 72

Model Number*	Dimensions (in)								Weight** (lbs)
	A	B	C	D	E	F	G	H	
Gas Pumps									
PG70xxx05	26.57	21.50	20.94	10.47	11.50	12.43	15.47	24.70	162
PG90xxx10	28.25	23.37	27.00	13.50	12.00	12.93	17.38	24.70	303
PG90xxx15	28.25	23.37	27.00	13.50	12.00	12.93	17.38	24.70	372
Diesel Pumps									
PD80xxx05	26.57	21.50	20.94	10.47	11.50	12.43	15.47	32.60	255
PD80xxx10	28.25	23.37	27.00	13.5	12.00	12.93	17.38	32.60	329
PD80xxx15	28.25	26.00	27.00	13.5	12.00	12.93	17.38	32.60	403

** "xxx" in the model number refers to the type of valve you may use on the gas/diesel engine pump. Refer to your local BVA dealer or the Matrix Chart (on page 61) to build your own pump.*
*** Pump weights include oil.*

Universal Motor Pumps

PU Series - Light-Weight Pumps

- Portable, light weight and compact design
- Universal Motor, starts under full load and is available in either 120VAC 50/60 HZ or 240VAC 50/60HZ
- 10ft 24 VAC pendant control for safety
- Weighs only 37 lbs. with oil
- External pressure adjustment is available
- Designed for intermittent duty operation
- Gauge port on control valve

PU20M4N01B

PU20DMP01B

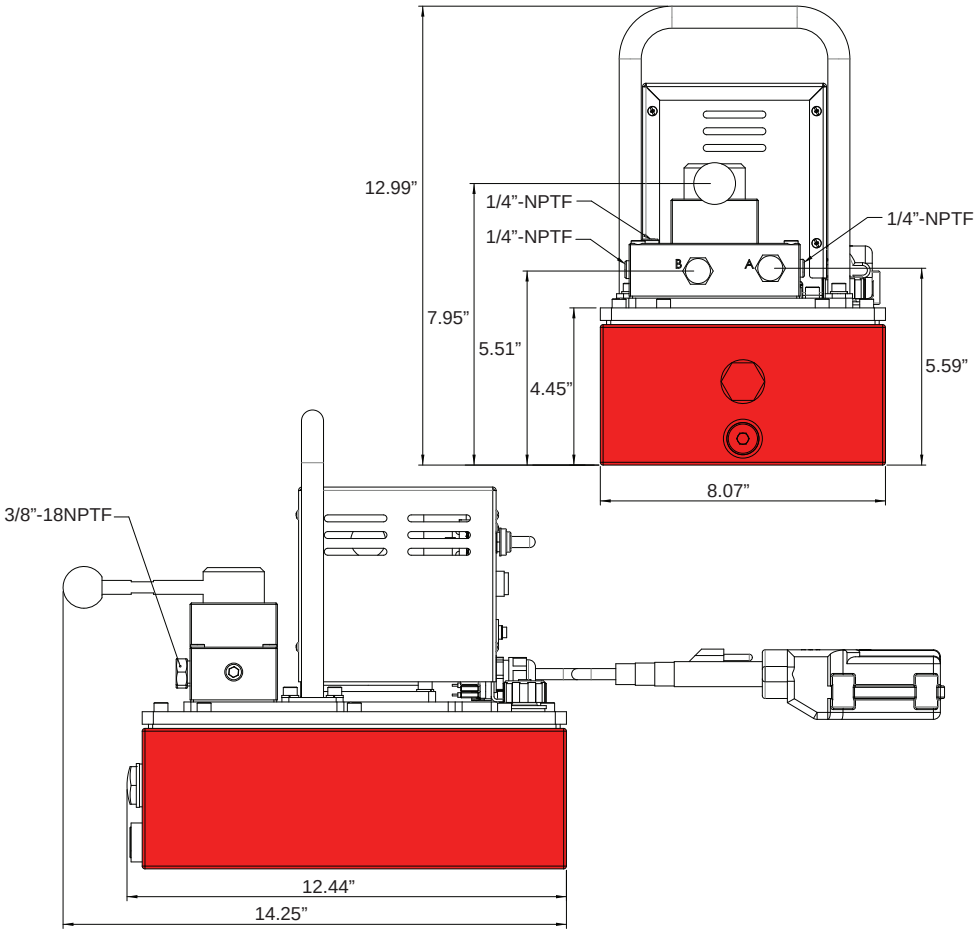

Hydraulic Gear Pullers

5, 10, 15, 25, 50 & 100 Ton Hydraulic Gear Pullers come with a safety cage design help keep the jaws tight to the gear and prevent slippage that can cause injury. Pair these with BVA's PU20M3N01B Lightweight e-pump for portability.

pg 83

Hydraulic Nut Splitters

Available in 3 models, each nut splitter can split a wide range of nut sizes thereby reducing the number of splitters needed. The BVA PU20DMP01B dump style pump works well with these splitters

pg 83

Flange Spreaders

BVA's Pin Type Flange Spreaders are available in both 5 & 10 Ton models and well suited for most environments. For portability and speed the PU20M3N01B would be an ideal choice.

pg 81

HGP-1 Pump Kit

HGP-1 Pump Kit contains: PU20M3N01B, CF3814, GW2514, CS3838C, and CH38M

Valve Function	Flow Rate				Motor Size	Voltage 50/60 Hz		Weight (lbs)	Length (in)	Width (in)	Height (in)
	1st Stage		2nd Stage			120 VAC	240 VAC				
	in³/min	psi	in³/min	psi		Model #	Model #				
2W/2P Advance/Return	133	200	28	10,000	1.0 Hp	PU20DMP01B	PU20DMP01C	37.0	12.44	8.07	11.81
3W/3P Advance/Hold Return	133	200	28	10,000	1.0 Hp	PU20M3N01B	PU20M3N01C	37.0	14.25	8.07	11.81
4W/3P Advance/Hold/Return	133	200	28	10,000	1.0 Hp	PU20M4N01B	PU20M4N01C	37.0	14.25	8.07	11.81

Combinations

Pump and Cylinder Sets

Each set includes:

- ¼" ID 6 foot Hydraulic Hose
- ⅜" High Flow Male Coupler
- Adapter (SP3 Models Only)
- 2½" Face Diameter Wet Gauge

Single Acting Cylinder Type	Cylinder				Hand Pump P350	Hand Pump P1000	Hand Pump P2301	Air Pump PA1500
	Capacity (Ton)	Model Number	Stroke (in)	Collapsed Height (in)				
General Purpose Cylinders	5	H0505	5.08	8.70	SP3-0505	-	-	-
	10	H1002	2.01	4.84	-	SP10-1002	-	SA15-1002
		H1004	4.02	6.85	-	SP10-1004	-	SA15-1004
		H1006	5.94	9.84	-	SP10-1006	-	SA15-1006
		HT1006	5.95	11.46	-	SP10-1006T	-	SA15-1006T
		H1010	9.96	13.86	-	SP10-1010	-	SA15-1010
		HT1010	9.96	15.47	-	SP10-1010T	-	SA15-1010T
	15	H1504	3.98	7.87	-	SP10-1504	-	SA15-1504
		H1506	5.98	10.63	-	SP10-1506	-	SA15-1506
	25	H2502	2.01	6.61	-	SP10-2502	-	SA15-2502
		H2504	4.02	8.62	-	SP10-2504	-	SA15-2504
		H2506	6.10	10.71	-	SP10-2506	-	SA15-2506
		H2508	8.11	12.72	-	-	SP23-2508	SA15-2508
		H2514	14.25	18.74	-	-	SP23-2514	SA15-2514
	55	H5506	6.26	11.14	-	-	SP23-5506	SA15-5506
	100	H10002A	2.01	8.62	-	-	SP23-10002A	-
Flat Body Cylinders	5	HF0503*	0.24	1.26	SP3-0503F	-	-	-
		HF0503B *	0.24	1.26	SP3-0503B	-	-	-
	10	HF1005	0.43	1.69	SP3-1005F	-	-	-
		HF1005B	0.43	1.69	SP3-1005B	-	-	-
	20	HF2005	0.43	2.01	SP3-2005F	-	-	-
		HF2005B	0.43	2.01	SP3-2005B	-	-	-
	30	HF3005	0.51	2.31	SP3-3005F	-	-	-
		HF3005B	0.51	2.31	SP3-3005B	-	-	-
	50	HF5006	0.63	2.64	SP3-5006F	-	-	-
		HF5006B	0.63	2.64	SP3-5006B	-	-	-
	75	HF7506	0.63	3.13	SP3-7506F	-	-	-
	100	HF10006	0.63	3.37	SP3-10006F	-	-	-
	150	HF15006	0.63	3.94	-	SP10-15006F	-	-

** HF0503 comes with CR38M coupler*
*** HC1202 comes with CRZ14M coupler*

We see here our combo kit SA15-3002L getting set up to lift a load. This combo kit includes a HL3002 cylinder, PA1500 air pump, CS3814 hose/CH38M coupler set, CF3814 gauge adapter and a GW2514 pressure gauge.

Combinations

Pump and Cylinder Sets

Single Acting Cylinder Type	Cylinder				Hand Pump P350	Hand Pump P1000	Hand Pump P2301	Air Pump PA1500
	Capacity (Ton)	Model	Stroke (in)	Collapsed Height (in)				
Hollow Hole Cylinders	12	HC1201T**	0.31	2.36	SP3-1201T	-	-	-
		HC1202T**	1.61	4.74	SP3-1202T	-	-	-
		HC1202XT**	1.61	4.74	SP3-1202XT	-	-	-
		HC1203XT	2.99	7.24	-	SP10-1203XT	-	-
	20	HC2002T	2.01	6.38	-	SP10-2002T	-	SA15-2002T
	30	HC3002T	2.52	7.05	-	SP10-3002T	-	-
		HC3006T	6.11	13.02	-	SP10-3006T	-	SA15-3006T
	60	HC6003T	3.00	9.77	-	SP10-6003T	-	SA15-6003T
		HC6006T	6.00	12.76	-	-	SP23-6006T	SA15-6006T
	100	HC10003T	3.00	10.00	-	-	SP23-10003T	SA15-10003T
Low Profile Cylinders	10	HL1001	1.50	3.48	SP3-1001L	SP10-1001L	-	SA15-1001L
	20	HL2002	1.75	3.90	SP3-2002L	SP10-2002L	-	SA15-2002L
	30	HL3002	2.44	4.61	SP3-3002L	SP10-3002L	-	SA15-3002L
	50	HL5002	2.36	4.80	-	SP10-5002L	-	SA15-5002L
	60	HL6003KK	2.50	5.63	-	SP10-6003L	SP23-6003L	SA15-6003L
	100	HL10002	2.24	5.55	-	SP10-10002L	SP23-10002L	SA15-10002L
Lock Nut Cylinders	55	HLN5502	1.97	6.50	-	-	SP23-5502LN	SA15-5502LN
		HLN5504	3.94	8.40	-	-	SP23-5504LN	SA15-5504LN
		HLN5506	5.91	10.40	-	-	SP23-5506LN	SA15-5506LN
Aluminum Cylinders	30	HU3002T	2.00	6.50	SP3-3002U	-	-	SA15-3002U
		HU3006T	6.00	10.50	-	SP10-3006U	-	SA15-3006U
	50	HU5006T	6.00	10.50	-	-	SP23-5006U	SA15-5006U

** HF0503 comes with CR38M coupler*
*** HC1202 comes with CRZ14M coupler*

Flow Control Valves

10,000 PSI Rated

CVN1 and CVN3

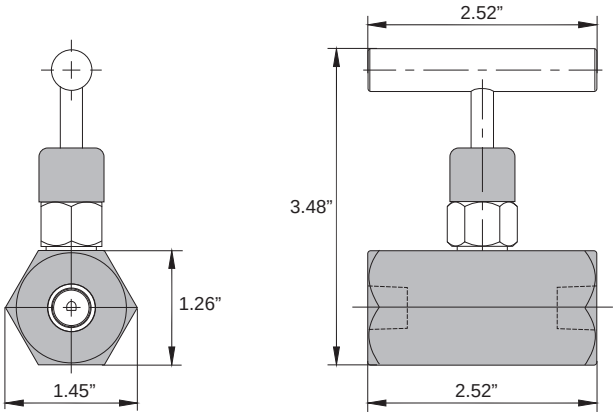

CVC3

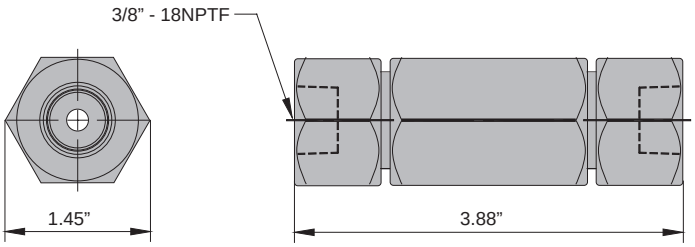

CVP3

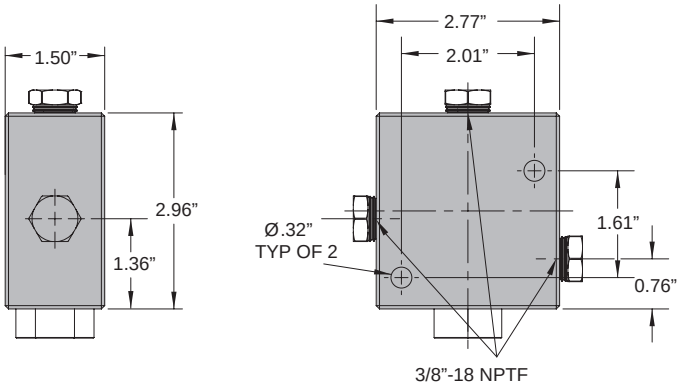

Valve Type	Model Number	Ports	Applications	Hydraulic Symbol
Needle Valve	CVN1	¼"-18NPTF	Controls cylinder speed and acts as temporary shut-off valve for load holding.	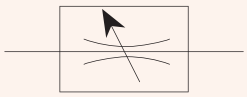
	CVN3	⅜"-18NPTF		
Check Valve	CVC3	⅜"-18NPTF	Allows flow in one direction only.	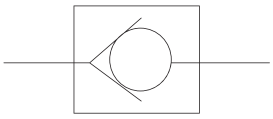
Pilot Operated Check Valve	CVP3	⅜"-18NPTF	Mounted in line to a cylinder which will hold pressure in the event of pressure loss in the system. Most often used on double-acting cylinders with pilot port, receiving pressure from a tee off of the cylinder retracting line. Pilot pressure ratio 15% or 6.5:1	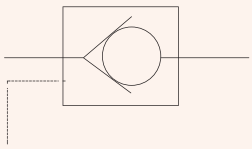

Flow Control Valves

10,000 PSI Rated

CVR3

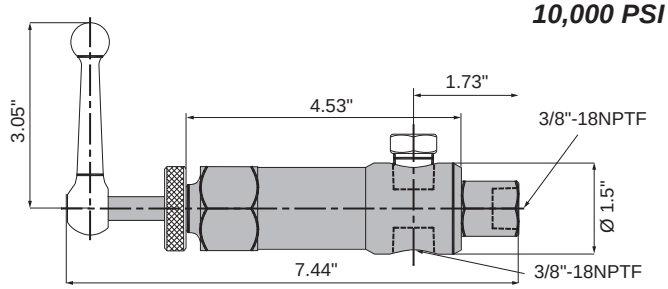

CVM3

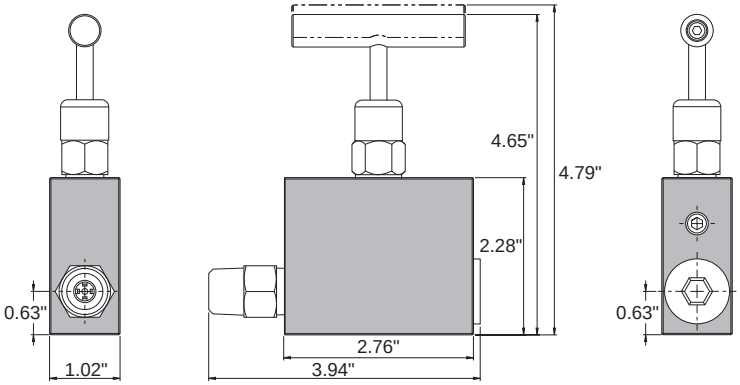

CVMS3

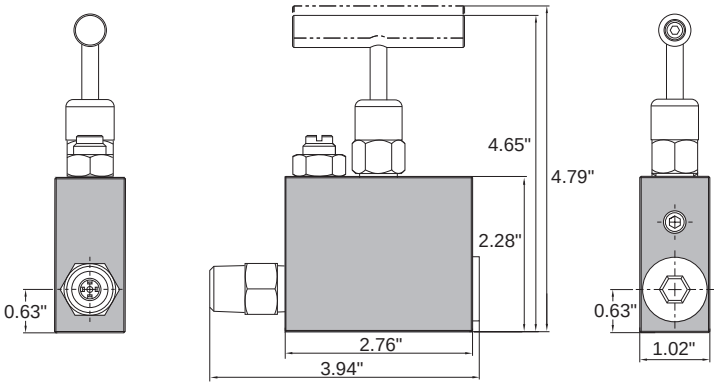

Valve Type	Model Number	Ports	Applications	Hydraulic Symbol
Pressure Relief Valve	CVR3	⅜”-18NPTF	Controls pressure developed by the pump in hydraulic loop. By-pass occurs when preset pressure reaches 0-10,000 PSI. Turns clockwise to increase pressure, counter-clockwise to decrease.	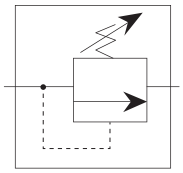
Manual Operated Check Valve	CVM3	⅜”-18NPTF	Mounted in line to a cylinder and will hold pressure in the cylinder in the event of pressure loss in the system. Pressure is manually released.	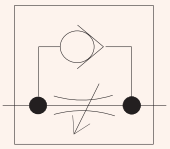
	CVMS3	⅜”-18NPTF	Mounted in line to a cylinder and will hold pressure in the cylinder in the event of pressure loss in the system. This model is equipped with high-pressure bypass. Pressure is manually released.	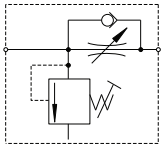

Manifolds

10,000 PSI Rated

CMH6

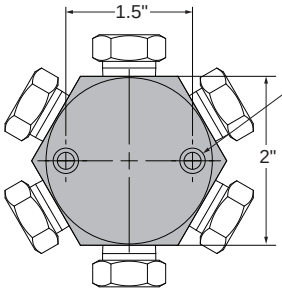

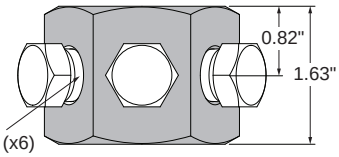

CM7

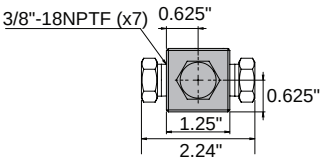

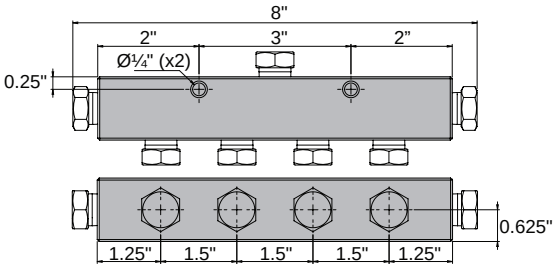

CM14

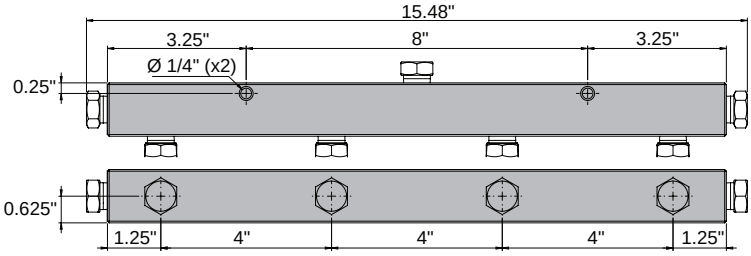

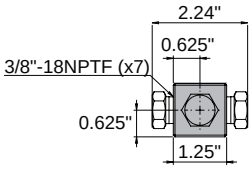

MFC4

MFC2

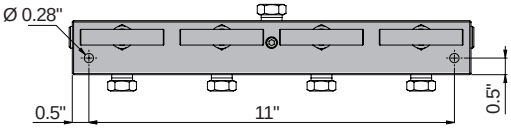

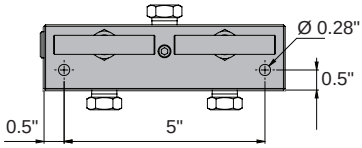

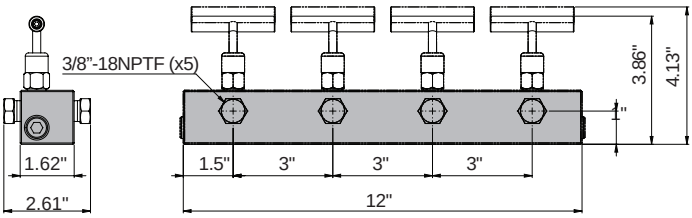

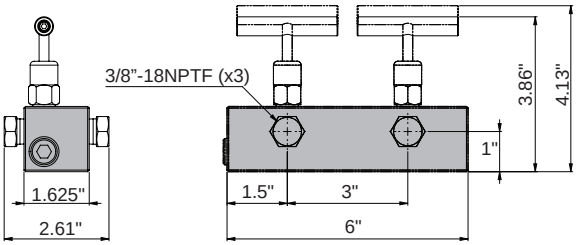

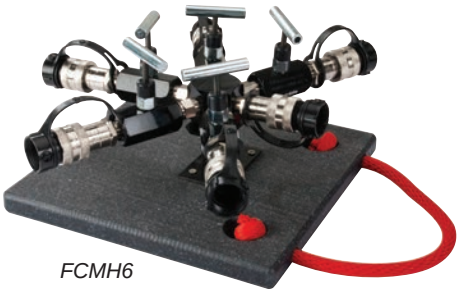

FCMH6

FCMH6

- Controls the flow of (5) hydraulic hoses from one central location
- Sturdy design for long product life
- Convenient carry handle

Manifold Type	Model Number	Number of Ports	Port Size	Mounting Holes
6-Port Hexagon Manifold	CMH6	6	⅜"-18NPTF	¼"-20UNC
7" Long Manifold	CM7	7	⅜"-18NPTF	¼"-20UNC
14" Long Manifold	CM14	7	⅜"-18NPTF	¼"-20UNC
Manifold with Two Needle Valves	MFC2	3	⅜"-18NPTF	0.28" Dia.
Manifold with Four Needle Valves	MFC4	5	⅜"-18NPTF	0.28" Dia.
Spider Valves	FCMH6	6	⅜"-18NPTF	-

Hydraulic Pressure Gauge

Digital or Analog

GW4014

GW2514

GD2514

GE2514

▲ *GE2514 Back-Lit digital pressure gauge displays in: PSI, BAR, KG/CM2 and MPa*

Gauge Type	Model Number	Certified Gauge	Face Dia. (in)	Thread (in)	Material	Pressure Range		Graduation			
						(psi)	(bar)	Major Graduation (psi)	Minor Graduation (psi)	Major Graduation (bar)	Minor Graduation (bar)
Digital	GE2514	-	2.50	1/4"-18 NPTF	Stainless	0 - 10,000	0 - 700	-	-	-	-
Dry	GD2514	-	2.50	1/4"-18 NPTF	Brass	0 - 15,000	0 - 1,034	2,000	200	100	20
	GD4014	-	4.00	1/4"-18 NPTF	Brass	0 - 15,000	0 - 1,034	2,000	200	100	20
	GD2512	-	2.50	1/2"-14 NPTF	Brass	0 - 10,000	0 - 700	2,000	200	100	20
	GD4012	-	4.00	1/2"-14 NPTF	Brass	0 - 10,000	0 - 700	2,000	200	100	20
Wet	GW2514	-	2.50	1/4"-18 NPTF	Brass	0 - 15,000	0 - 1,034	2,000	200	100	20
	GW4014	-	4.00	1/4"-18 NPTF	Brass	0 - 15,000	0 - 1,034	2,000	200	100	20
	GW4014-CERT	yes	4.00	1/4"-18 NPTF	Stainless	0 - 20,000	0 - 1,379	2,000	200	100	20
	GW2512	-	2.50	1/2"-14 NPTF	Brass	0 - 10,000	0 - 700	2,000	200	100	20
	GW4012	-	4.00	1/2"-14 NPTF	Brass	0 - 10,000	0 - 700	2,000	200	100	20

Gauge Adapter

10,000 PSI Rated

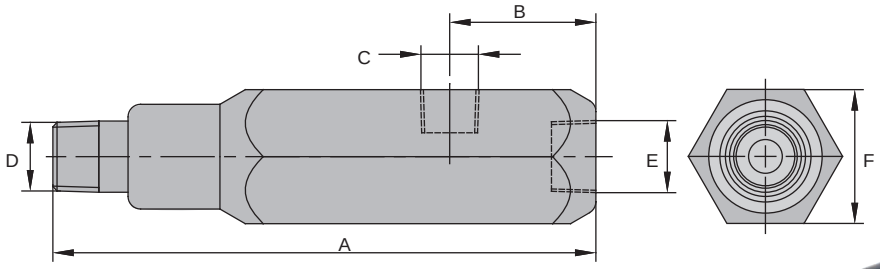

CF3814

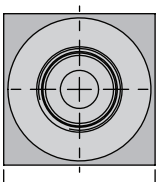

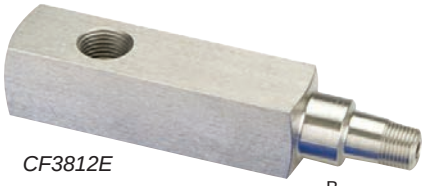

CF3812E

CF3812

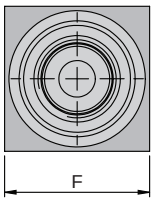

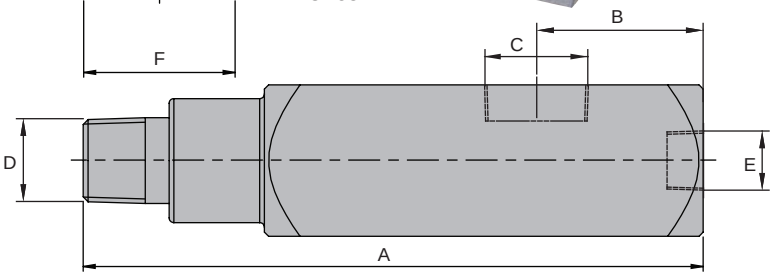

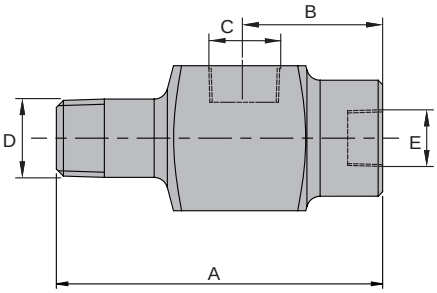

Model Number	Dimensions (in)					
	A	B	C	D	E	F
CF3814	5.12	1.38	¼"-18NPTF	⅜"-18NPTF	⅜"-18NPTF	1.25
CF3812	2.81	1.38	½"-14NPTF	⅜"-18NPTF	⅜"-18NPTF	1.25
CF3812E	6.10	1.38	½"-14NPTF	⅜"-18NPTF	⅜"-18NPTF	1.25

Hydraulic Oil

ISO 46

- Recommended for all BVA cylinders and pumps

Volume (gal)	Model Number	Viscosity Index (min)	Viscosity @ 100°F (S.U.S.)	Viscosity @ 210°F (S.U.S.)	ASTM Grade	Flash Point (°F)	Pour Point (°F)	API Gravity
1	F01	144	234	53	215	356	-49	30.8
55	F55	144	234	53	215	356	-49	30.8

F01

Coupler Dust Cover

- Keeps contaminants out of the system

Model Number	Coupler Compatibility
CDC38	CH38, CH38F, CH38M

CDC38

Solenoid Valves

Pump Mounted

- Pump mounted solenoid kits converts your manual pump to an electrically controlled pump.

PS33L

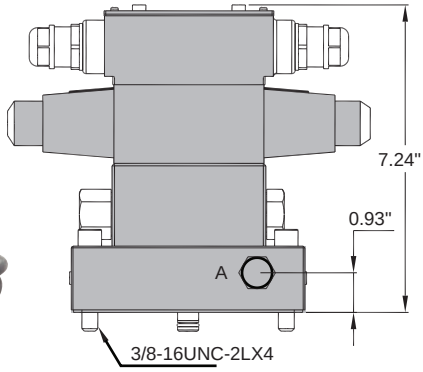

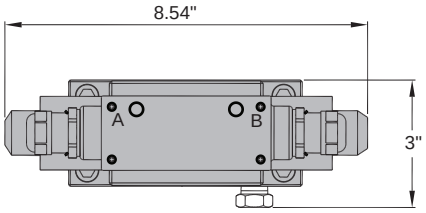

Use With Cylinder	Model Number	Valve Type	Valve Function	Hydraulic Symbol	Schematic Flow path			Weight (lbs)
Single Acting	PS33L	Solenoid 115VAC	Advance/ Hold/Re-turn	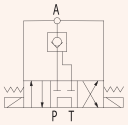	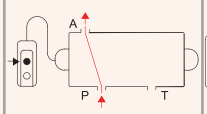	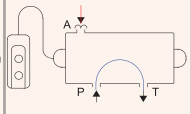	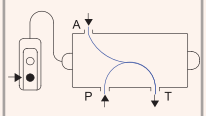	7.0
Single Acting	PD33	Solenoid 115VAC	Advance/ / Return	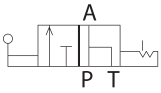	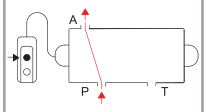	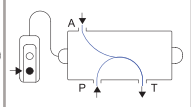	-	6.0
Double Acting	PS43L	Solenoid 115VAC	Advance/ Hold/Re-turn	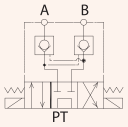	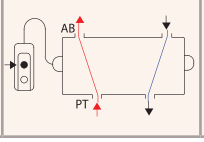	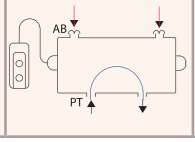	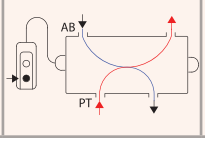	7.0

Hydraulic Couplers

10,000 PSI Rated

CH38

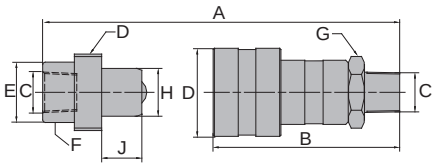

CFS38

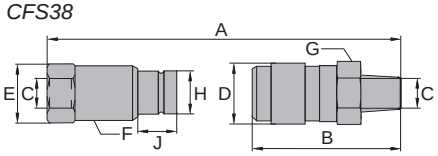

CR38

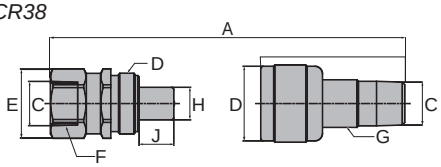

CH14

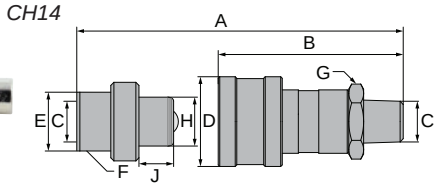

CRZ14

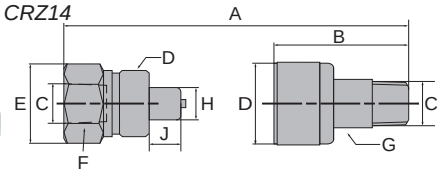

Coupler Type	Model Numbers			Dimensions (in)								
	Complete Set	Male Half	Female Half	A*	B	C	D	E	F	G	H	J
High-Flow Coupler	CH38	CH38M	CH38F	3.35	2.84	3/8"-18NPTF	1.10	-	1.00	0.75	0.63	0.63
Flush-Face Coupler	CFS38	CFS38M	CFS38F	4.36	2.85	3/8"-18NPTF	1.21	1.06	1.12	0.79	0.63	0.63
Regular-Flow Coupler	CR38	CR38M	CR38F	3.15	2.20	3/8"-18NPTF	1.04	-	0.73	0.50	0.53	0.53
High-Flow Coupler	CH14	CH14M	CH14F	2.83	2.35	1/4"-18NPTF	0.87	-	0.83	0.62	0.41	
Zinc Coupler	CRZ14	CRZ14M	CRZ14F	2.42	1.67	1/4"-18NPTF	0.95	0.83	0.58	0.39	0.35	0.35

** Value A is total length when male and female couplers are connected.*

Foot Pedals

Single or Double

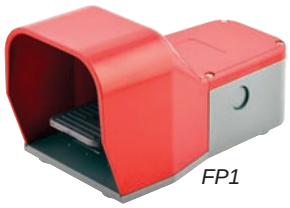

FP1

FP2

- Hands free pump operation
- Can be used with all pumps equipped with solenoid valves

Foot controls with 10' cord. This option replaces the hand controls on solenoid equipped models.

Wireless Hand Held Control

WR12K

- Allows for increased mobility and safety
- Nominal range of 325 feet (greater w/ unobstructed line of sight)
- Batteries last 100 hours with continuous key press (2 AAA batteries)
- For hands free pump operation
- Contact your local BVA dealer for further information

External Pressure Adjustment

Sandwich Mounted

Model Number	Pressure Adj. Range (psi)	Interval (psi)	Suitable Model
PW-AS1	1,000 ~ 10,000	50	PE Series, 1 Gal. Reservoir
PW-AS2			PE Series, 2+ Gal. Reservoir
PW-AS3			PU20 Series Pump
PW-AS4			PU20DMP Series

PW-AS1

- Pressure can be adjusted externally (1,000-10,000 psi)
- Works with single and double acting cylinders

CMR2

Pump Mounted Manifold Block

CMR2

- Converts BVA pumps with mounted valves for use with remote mounted valves
- Comes with 4 mounting bolts

Pressure Switch

CVS1

- Automatically shuts off electric pump when predetermined system pressure is reached

Model Number	Adjustable Pressure Range	Electrical Rating	Port Size	Weight (lbs)
CVS1	1,000~10,150 psi	15 amp @ 250V max	¼"-18NPTF	1.32

CVS1

Hydraulic Hoses

Rubber or Thermoplastic

- All hoses are designed with a Maximum Working Pressure of 10,000 psi
- Heavy Duty Rubber Hoses are made with 2 layers of steel braids and comply with the Material Handling Institutes IJ-100 standard for hoses and carries a 2:1 safety factor
- Thermoplastic Hoses are made with 2 layers of steel braids with wrapped in a Polyurethane jacket and carries a 4:1 safety factor

Hose ID (in)	Hose Length (ft)	Hose End 1	Hose End 2							
			1/4"-18 NPTF		3/8"-18 NPTF		CR38M Coupler		CH38M Coupler	
			Rubber Model Number	Thermoplastic Model Number	Rubber Model Number	Thermoplastic Model Number	Rubber Model Number	Thermoplastic Model Number	Rubber Model Number	Thermoplastic Model Number
¼"	6	¼"-18 NPTF	CS1414	CT1414	-	-	-	-	CS1414M	CT1414M
	2	⅜"-18 NPTF	-	-	CS3814A	-	CS3814AMR	-	CS3814AM	-
	3	⅜"-18 NPTF	-	-	CS3814B	CT3814B	CS3814BRM	-	CS3814BM	-
	6	⅜"-18 NPTF	-	-	CS3814	CT3814	CS3814MR	-	CS3814M	CT3814M
	10	⅜"-18 NPTF	-	-	CS3814C	CT3814C	CS3814CRM	-	CS3814CM	CT3814CM
	20	⅜"-18 NPTF	-	-	CS3814D	CT3814D	CS3814DRM	-	CS3814DM	CT3814DM
	30	⅜"-18 NPTF	-	-	CS3814G	CT3814E	-	-	CS3814GM	CT3814EM
⅜"	6	⅜"-18 NPTF	-	-	CS3838	CT3838	CS3838MR	-	CS3838M	CT3838M
	10	⅜"-18 NPTF	-	-	CS3838C	CT3838C	-	-	CS3838CM	CT3838CM
	20	⅜"-18 NPTF	-	-	CS3838D	CT3838D	-	-	CS3838DM	CT3838DM
	30	⅜"-18 NPTF	-	-	CS3838E	CT3838E	-	-	CS3838EM	CT3838EM
	50	⅜"-18 NPTF	-	-	CS3838F	CT3838F	-	-	CS3838FM	CT3838FM

Pump Mounted Valves

For PE, PG and PD Pumps Only

PW2

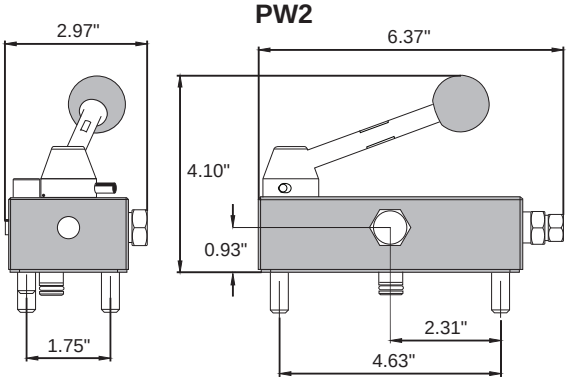

PW33L

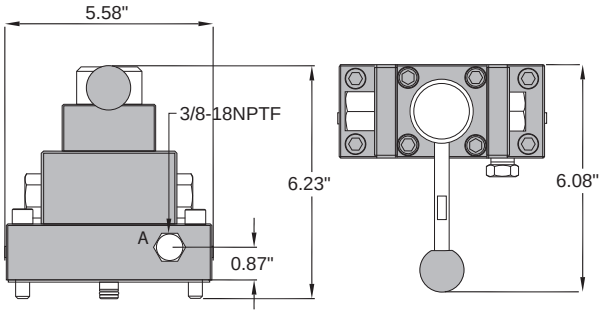

PW3 and PW4

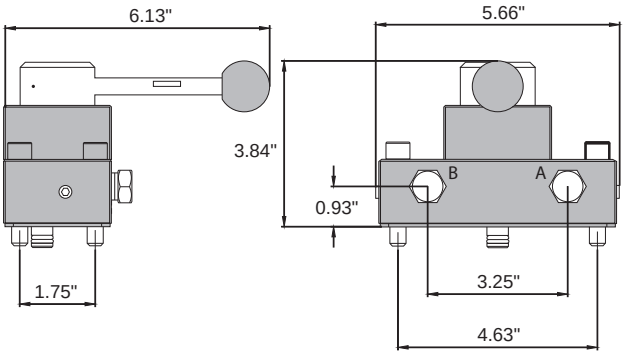

PW43L

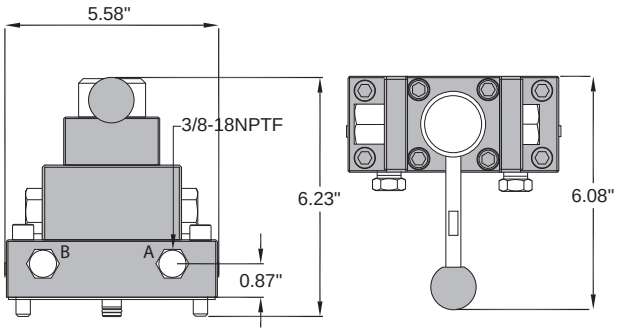

Valve Operation	Valve Type	Use w/ Cylinder	Model Number		Hydraulic Symbol	Schematic Flow path			Weight (lbs)
Manual	3-Way, 2-Position	Single Acting	PW2			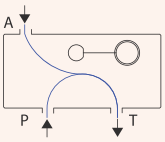	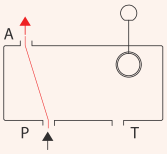	-	4
	3-way, 3-Position, Tandem center	Single Acting	PW3		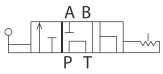	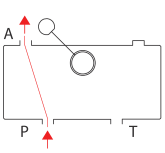	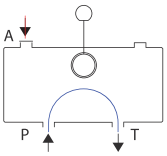	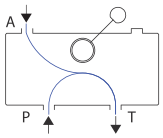	4
	4-Way, 3-Position, Tandem center	Double Acting	PW4			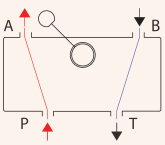	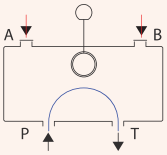	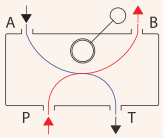	3
	3-Way, 3-Position, Tandem center, Locking	Single Acting	PW33L		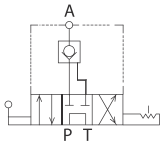	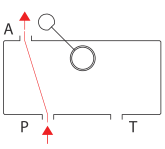	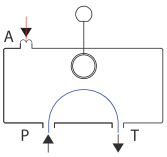	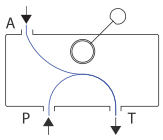	6
	4-Way, 3-Position, Tandem center, Locking	Double Acting	PW43L		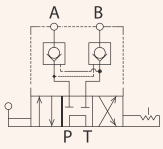	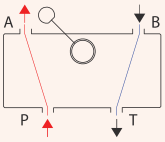	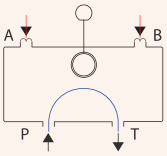	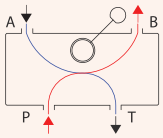	6

Remote Mounted Directional Control Valves

Not to be used with Hand Pumps

PR33, PR33C

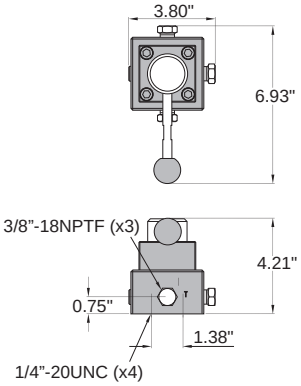

PR33L , PR33CL

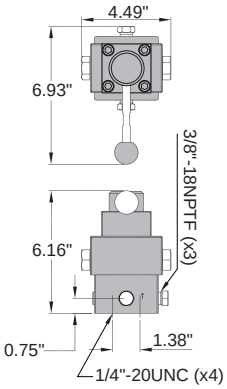

PR43, PR43C

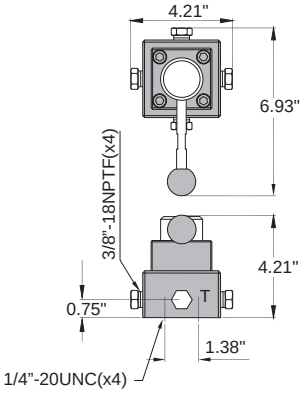

PR43CL

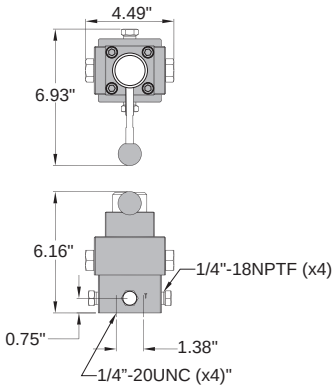

Valve Operation	Valve Type	Use w/ Cylinder	Model Number		Hydraulic Symbol	Schematic Flow path			Weight (lbs)
Manual	3-Way, 3 Position, Tandem center	Single Acting	PR33		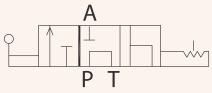	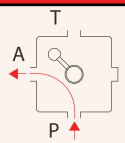	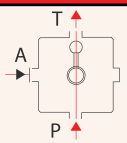	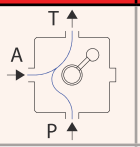	3.5
	3-Way, 3 Position, Closed center		PR33C		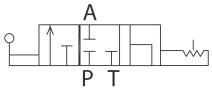	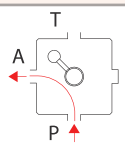	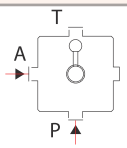	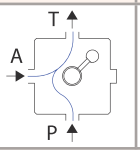	3.5
	3-Way, 3 Position, Tandem center, Locking		PR33L		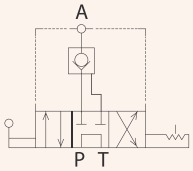	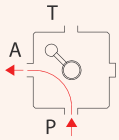	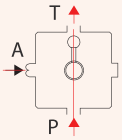	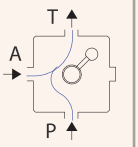	5.7
	3-Way, 3 Position, Closed center, Locking		PR33CL		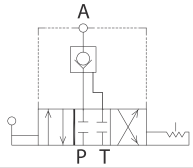	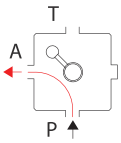	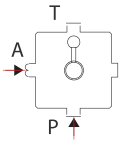	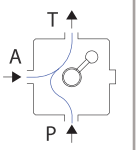	5.7
	4-Way, 3 Position, Tandem center	Double Acting	PR43		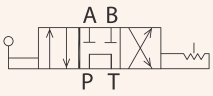	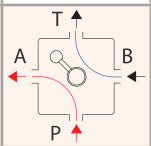	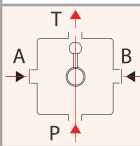	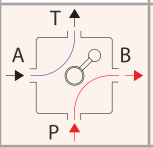	3.5
	4-Way, 3 Position, Tandem center, Locking		PR43L		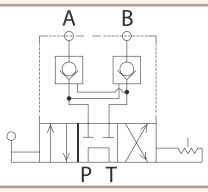	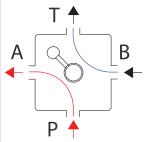	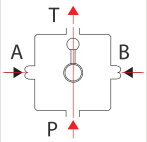	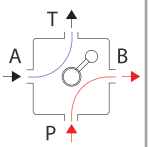	5.7
	4-Way, 3 Position, Closed center		PR43C		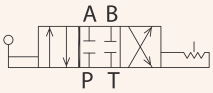	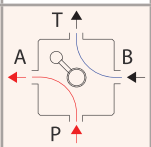	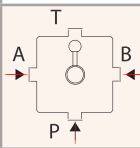	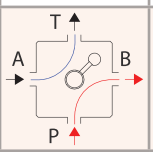	3.5
	4-Way, 3 Position, Closed center, Locking		PR43CL		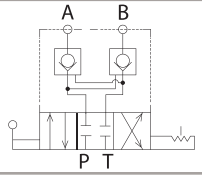	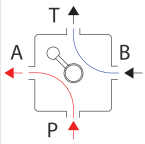	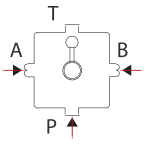	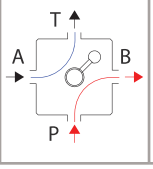	5.7

All valves have a detent in the center position.

Fitting Type		Model Number	Dimensions				Display Image
			A (in)	B (in)	C	D	
Adapters							
	Adapter ½″-14NPTF - Female ⅜″-18NPTF - Male	FT108	1.69	1.14	Male ⅜″-18NPTF	Female ½″-14NPTF	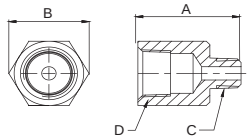
	Adapter ½″-14NPTF - Female ¼″-18NPTF - Male	FT118	1.69	1.14	Male ¼″-18NPTF	Female ½″-14NPTF	
	Fitting	CA3814	1.38	0.91	Male ¼″-18NPTF	Female ⅜″-18NPTF	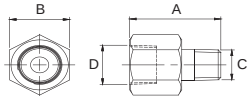
Bushings/Connectors							
	Bushing	CB1438	0.87	0.67	Male ⅜″-18NPTF	Female ¼″-18NPTF	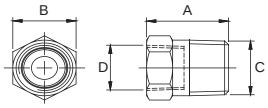
	Bushing	CB1412	1.10	0.87	Male ½″-14NPTF	Female ¼″-18NPTF	
	Bushing	CB3812	1.10	0.87	Male ½″-14NPTF	Female ⅜″-18NPTF	
	2 way 45° Connector Street Elbow, ⅜″ to ⅜″-NPTF	FT045	1.89	1.02	Male ⅜″-18NPTF	Female ⅜″-18NPTF	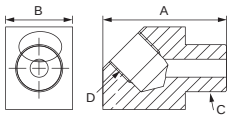
	2 way 90° Connector Street Elbow, ⅜″ to ⅜″-NPTF	FT101	1.81	1.02	Male ⅜″-18NPTF	Female ⅜″-18NPTF	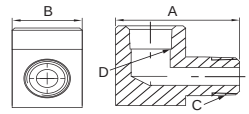
	2 way 90° Connector Elbow, ⅜″ to ⅜″ - NPTF	FT107	1.40	1.02	Female ⅜″-18NPTF	Female ⅜″-18NPTF	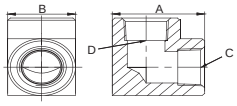
	3 Way Connector ⅜″ to ⅜″ - NPTF	FT106	1.77	1.02	Female ⅜″-18NPTF	Female ⅜″-18NPTF	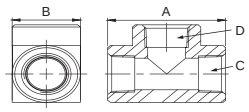
	4 Way Connector Cross, ⅜″ to ⅜″ - NPTF	FT105	1.77	1.02	Female ⅜″-18NPTF	Female ⅜″-18NPTF	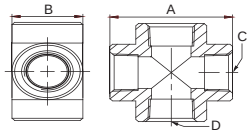
Couplings							
	Coupling Reducing Connector, ⅜″ to ¼″-NPTF	FT102	1.18	1.02	Female ¼″-18NPTF	Female ⅜″-18NPTF	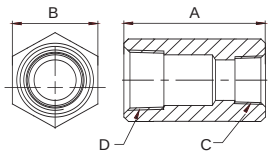
	Coupling Reducing Connector, ½″ to ⅜″ - NPTF	FT112	1.89	1.14	Female ½″-14NPTF	Female ⅜″-18NPTF	
	Coupling ⅜″ to ⅜″- NPTF	FT103	1.18	1.02	Female ⅜″-18NPTF	Female ⅜″-18NPTF	
Hex Nipples							
	Male Connector Hex Nipple, ¼″ to ¼″ - NPTF	FT104	1.50	0.67	Male ¼″-18NPTF	Male ¼-18NPTF	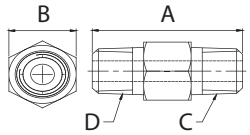
	Male Connector Hex Nipple, ⅜″ to ⅜″- NPTF	FT114	1.50	0.75	Male ⅜″-18NPTF	Male ⅜″-18NPTF	
	Male Connector Hex Nipple, ¼″ to ⅜″- NPTF	FT124	1.45	0.75	Male ¼″-18NPTF	Male ⅜″-18NPTF	

Presses	Reference Image Page Number	Presses	Page Number / Reference Image
Movable Head Shop Press	77	Shop Press Accessories	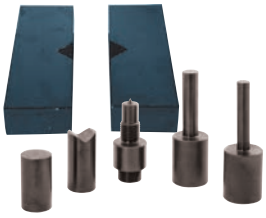 80
Fixed Head Shop Presses	78-79	Press Guards	80

Tools	Page Number / Reference Image
Flange Spreaders	81
Duck Bill Spreaders	81
Oil Field Valve Seat Pullers	82
50 Ton Cylinder with Base and Needle Valve Kit	82
Hydraulic Bench Vise	82
Hydraulic Gear Pullers	83
Mechanical Gear Pullers	83
Hydraulic Nut Splitters	83
Maintenance/Bottle Jacks	Page 84 ►

55 Ton Shop Press with Movable Work Head

H-Frame

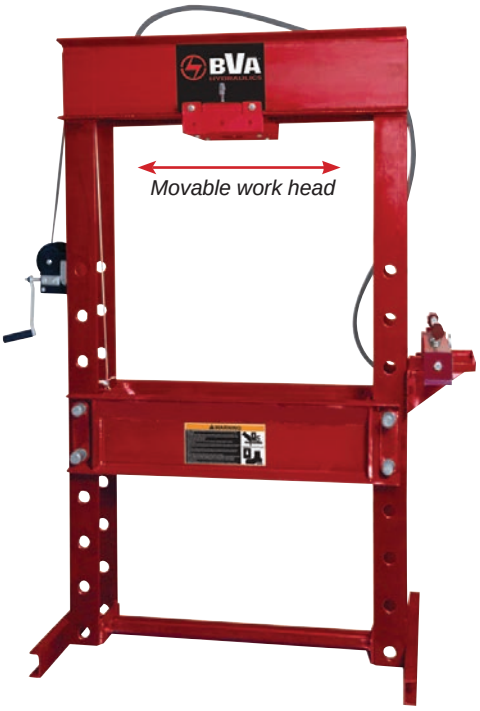

- Welded steel construction
- Cylinder moves from side to side and locks into position
- Multi-position bed for work height adjustment
- Pump, cylinder, hose, gauge and fittings are included

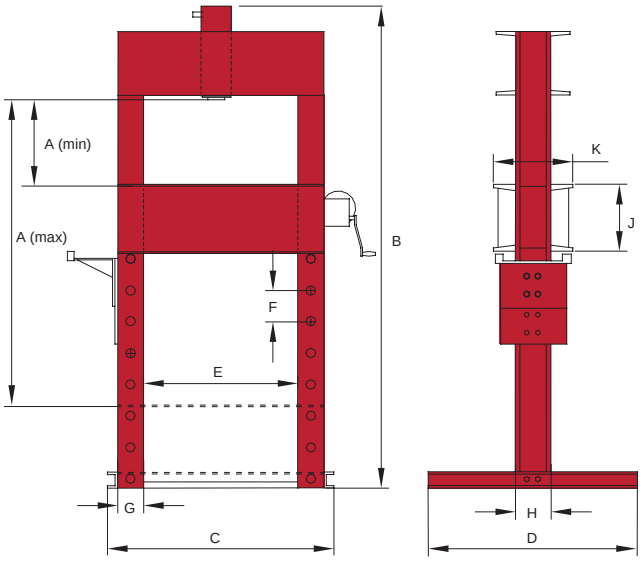

Capacity (Tons)	Model Number	Pump Type	Pump Model	Cylinder Model	Cylinder Stroke (In)	Bed Positions	Press Dimensions (H x L x W)	Working Space (Min - Max) (in)
Single Acting								
55	IAPR5506	Air	PA2000	H5506	6	7	78" X 46.5" X 30"	15.38" X 51.38"
	IEPR5506	Electric	PE40W3N02A	H5506	6	7	78" X 46.5" X 30"	15.38" X 51.38"
	IAPR5513	Air	PA3801	H5513	13	7	85" X 46.5" X 30"	15.38" X 51.38"
	IEPR5513	Electric	PE40W3N02A	H5513	13	7	85" X 46.5" X 30"	15.38" X 51.38"
	IEPRS5513	Electric/Solenoid	PE40S3L02A	H5513	13	7	85" X 46.5" X 30"	15.38" X 51.38"
Double Acting								
55	IAPDR5506	Air	PA3801M	HD5506	6	7	78" X 46.5" X 30"	15.38" X 51.38"
	IEPDR5513	Electric	PE40W4N02A	HD5513	13	7	85" X 46.5" X 30"	15.38" X 51.38"
	IEPDRS5513	Electric/Solenoid	PE40S4L02A	HD5513	13	7	85" X 46.5" X 30"	15.38" X 51.38"

Model Number	Dimensions (in)											Weight (lbs)
	A (Min.)	A (Max.)	B	C	D	E	F	G	H	J	K	
Single Acting												
IAPR5506	15.38	51.38	78	46.5	30	35.75	6	4	9	10	15	950.0
IEPR5506	15.38	51.38	78	46.5	30	35.75	6	4	9	10	15	1015.0
IAPR5513	15.38	51.38	85	46.5	30	35.75	6	4	9	10	15	991.0
IEPR5513	15.38	51.38	85	46.5	30	35.75	6	4	9	10	15	1048.0
IEPRS5513	15.38	51.38	85	46.5	30	35.75	6	4	9	10	15	1050.0
Double Acting												
IAPDR5506	15.38	51.38	78	46.5	30	35.75	6	4	9	10	15	955.0
IEPDR5513	15.38	51.38	85	46.5	30	35.75	6	4	9	10	15	1020.0
IEPDRS5513	15.38	51.38	85	46.5	30	35.75	6	4	9	10	15	1022.0

Shop Presses

- Welded steel construction
- Ideal for the removal or installation of gears, universal joints, pulleys, wrist pins, and other press jobs
- Multi-position bed for work height adjustment
- Excellent for bending, bonding, or straightening applications

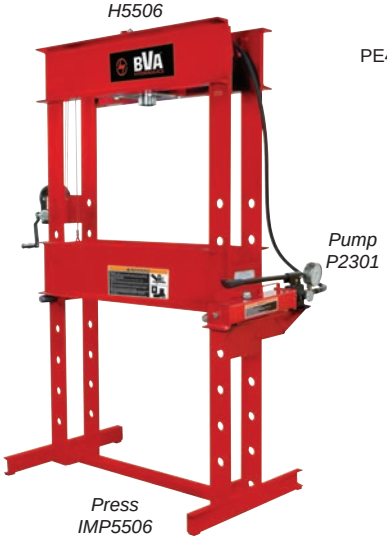

Capacity (Tons)	Model Number	Pump Type	Pump Model	Cylinder Model	Cylinder Stroke (In)	Bed Positions	Press Dimen-sions (H X L X W)	Working Space (Min - Max) (in)
Single Acting								
25	IMP2506	Manual	P1000	H2506	6	8	71” X 48” X 28”	4.5” X 47.25”
	IAP2506	Air	PA1500	H2506	6	8	71” X 48” X 28”	4.5” X 47.25”
	IEP2506	Electric	PE30W3N01A	H2506	6	8	71” X 48” X 28”	4.5” X 47.25”
	IMP2514	Manual	P2001	H2514	14	8	71” X 48” X 28”	4.5” X 47.25”
	IAP2514	Air	PA2000	H2514	14	8	71” X 48” X 28”	4.5” X 47.25”
	IEP2514	Electric	PE30W3N01A	H2514	14	8	71” X 48” X 28”	4.5” X 47.25”
	IEPS2514	Electric/Solenoid	PE30S3L01A	H2514	14	8	71” X 48” X 28”	4.5” X 47.25”
55	IMP5506	Manual	P2301	H5506	6	9	79” X 56” X 30”	14” X 55.5”
	IAP5506	Air	PA1500	H5506	6	9	79” X 56” X 30”	14” X 55.5”
	IEP5506	Electric	PE40W3N02A	H5506	6	9	79” X 56” X 30”	14” X 55.5”
	IAP5513	Air	PA3801	H5513	13	9	79” X 56” X 30”	14” X 55.5”
	IEP5513	Electric	PE40W3N02A	H5513	13	9	79” X 56” X 30”	14” X 55.5”
100	IAP10010	Air	PA7550	H10010	10	8	89” X 63” X 30”	11.25” X 51”
	IEP10010	Electric	PE40W3N02A	H10010	10	8	89” X 63” X 30”	11.25” X 51”
	IEPS10010	Electric/Solenoid	PE40S3L02A	H10010	10	8	89” X 63” X 30”	11.25” X 51”
Double Acting								
25	IMPD2506	Manual	P2301M	HD2506	6	6	71” X 48” X 28”	4.5” X 47.25”
	IAPD2506	Air	PA3801M	HD2506	6	6	71” X 48” X 28”	4.5” X 47.25”
	IEPD2506	Electric	PE30W4N01A	HD2506	6	6	71” X 48” X 28”	4.5” X 47.25”
	IEPDS2506	Electric/Solenoid	PE30S4L01A	HD2506	6	6	71” X 48” X 28”	4.5” X 47.25”
55	IEPD5513	Electric	PE40W4N02A	HD5513	13	9	79” X 56” X 30”	14” X 55.5”
100	IEPD10010	Electric	PE40W4N02A	HD10010	10	8	89” X 63” X 30”	11.25” X 51”
	IEPDS10010	Electric/Solenoid	PE40S4L02A	HD10010	10	8	89” X 63” X 30”	11.25” X 51”

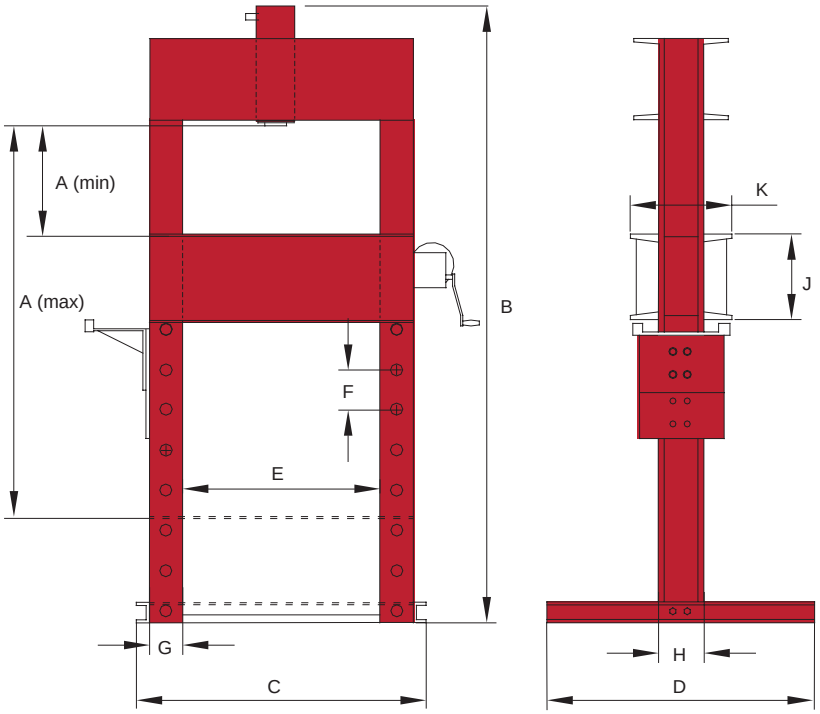

I Series

Made in the U.S.A.

All press frames are made in the USA and meet ISO 9001/2008 and CE certification.

Press Accessories

See the assortment of accessories designed to work with these product.

pg 80

Press Guards

Add a layer of protection between the operator and the work for extra safety.

pg 80

Model Number	Dimensions (in)											Weight (lbs)
	A (Min.)	A (Max.)	B	C	D	E	F	G	H	J	K	
Single Acting												
IMP2506	6.25	48.25	71.00	38.75	28.00	30.00	6.00	3.00	6.50	8.00	11.50	442.0
IAP2506	6.25	48.25	71.00	38.75	28.00	30.00	6.00	3.00	6.50	8.00	11.50	447.0
IEP2506	6.25	48.25	71.00	38.75	28.00	30.00	6.00	3.00	6.50	8.00	11.50	490.0
IMP2514	6.25	48.25	79.03	38.75	28.00	30.00	6.00	3.00	6.50	8.00	11.50	469.0
IAP2514	6.25	48.25	79.03	38.75	28.00	30.00	6.00	3.00	6.50	8.00	11.50	465.0
IEP2514	6.25	48.25	79.03	38.75	28.00	30.00	6.00	3.00	6.50	8.00	11.50	506.0
IEPS2514	6.25	48.25	79.03	38.75	28.00	30.00	6.00	3.00	6.50	8.00	11.50	508.0
IMP5506	8.00	55.88	80.50	46.25	30.00	35.63	6.00	3.00	9.00	10.00	14.75	847.0
IAP5506	8.00	55.88	80.50	46.25	30.00	35.63	6.00	3.00	9.00	10.00	14.75	837.0
IEP5506	8.00	55.88	80.50	46.25	30.00	35.63	6.00	3.00	9.00	10.00	14.75	880.0
IAP5513	8.00	55.88	87.51	46.25	30.00	35.63	6.00	3.00	9.00	10.00	14.75	876.0
IEP5513	8.00	55.88	87.51	46.25	30.00	35.63	6.00	3.00	9.00	10.00	14.75	910.0
IAP10010	14.38	52.38	90.00	46.25	40.00	35.50	8.00	4.00	10.13	11.00	16.25	1142.0
IEP10010	14.38	52.38	90.00	46.25	40.00	35.50	8.00	4.00	10.13	11.00	16.25	1178.0
IEPS10010	14.38	52.38	90.00	46.25	40.00	35.50	8.00	4.00	10.13	11.00	16.25	1180.0
Double Acting												
IMPD2506	6.25	48.25	71.00	38.75	28.00	30.00	6.00	3.00	6.50	8.00	11.50	468.0
IAPD2506	6.25	48.25	71.00	38.75	28.00	30.00	6.00	3.00	6.50	8.00	11.50	459.0
IEPD2506	6.25	48.25	71.00	38.75	28.00	30.00	6.00	3.00	6.50	8.00	11.50	496.0
IEPDS2506	6.25	48.25	71.00	38.75	28.00	30.00	6.00	3.00	6.50	8.00	11.50	498.0
IEPD5513	8.00	55.88	87.51	46.25	30.00	35.63	6.00	3.00	9.00	10.00	14.75	942.0
IEPD10010	14.38	52.38	90.00	46.25	40.00	35.50	8.00	4.00	10.13	11.00	16.25	1198.0
IEPDS10010	14.38	52.38	90.00	46.25	40.00	35.50	8.00	4.00	10.13	11.00	16.25	1200.0

25 Ton Shop Press Accessories

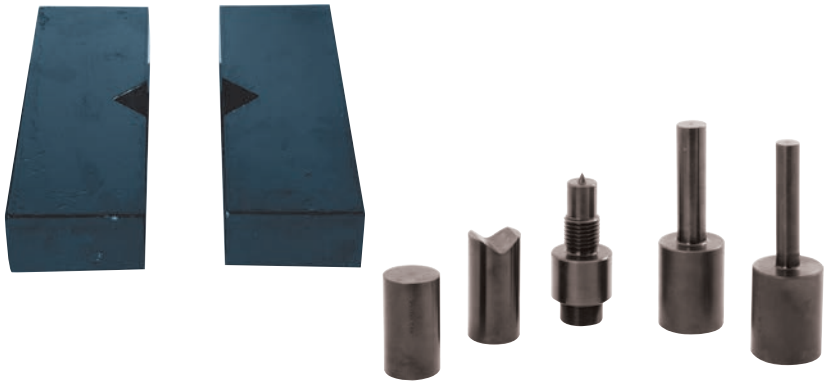

CS25 includes:
- Rod forcing cap
- V push adapter
- Threaded adapter
- ¾″ push adapter
- 1″ push adapter
- Arbor plates (in pairs)

55 Ton Shop Press Accessories

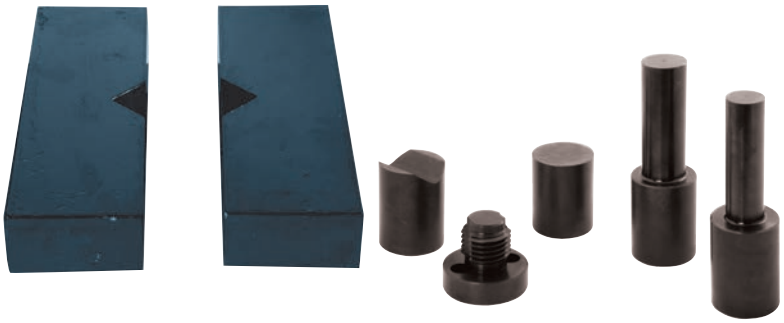

CS55 includes:
- Rod forcing cap
- Threaded adapter
- 1½″ push adapter
- 1¼″ push adapter
- V push adapter
- Arbor plates (in pairs)

100 Ton Shop Press Accessory

AP100 includes:
- Arbor plates (in pairs)

Press Guards

Add a barrier layer between the operator and the work for added safety. Press guards help keep hands out of work area and shields flying debris from being ejected from the press and prevents them from becoming a hazard.

- Sturdy construction
- Fits all types of shop presses (single and double acting)
- Prevent possible injury/damage from flying debris from occurring in case of an issue

Model Number	Capacity (tons)	Shop Press Compatibility
SPG25	25	All Manual, Electric and Air 25 Tons Presses (Single and Double Acting)
SPG100	55 & 100	All Manual, Electric and Air 55 and 100 Tons Presses (Single and Double Acting)

Flange Spreader

Pin Type

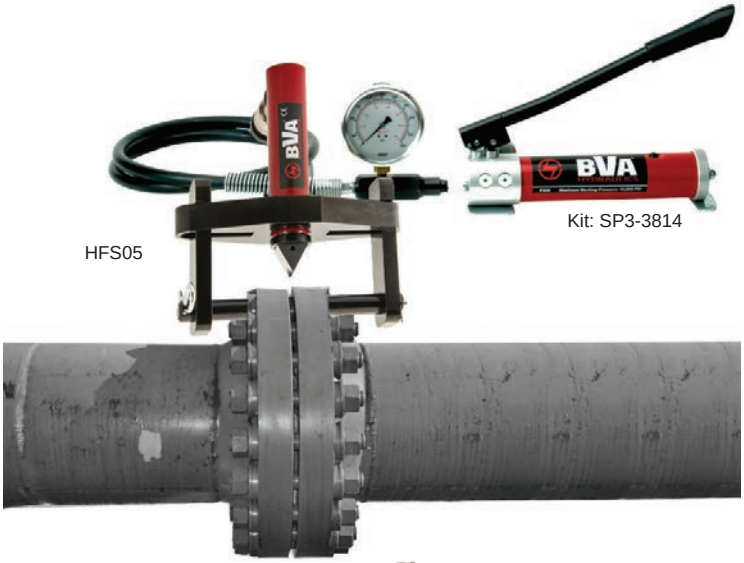

SP3-3814

This combination kit works well with our Hand Pump. See our combo section for more details.

pg 64

SP5-3814

This combination kit works well with our Foot Pump. See our combo section for more details.

- Designed for heavy duty industrial environment
- Adjustable jaw width for a wide range of applications and ease of use
- Spare wedge attachment comes standard

Capacity (tons)	Model Number	Stroke (in.)	Oil Capacity (in³)	Maximum Flange Thickness (in.)
5	HFS05	1.00	1.00	2 X 2.3
10	HFS10	2.01	4.50	2 X 3.6

Spreaders

Duck Bill Spreader

- Designed to work in confined working spaces
- Ideal for wedging, prying, and opening
- High strength forged steel
- Spring return for easy operation

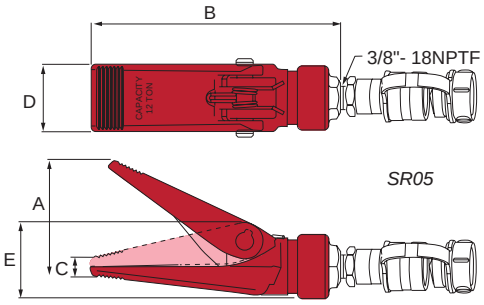

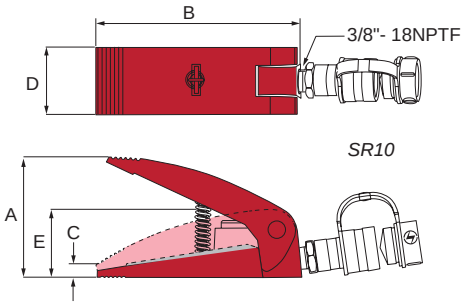

Cylinder Capacity (tons)	Model Number	Cylinder Effective Area (in²)	Oil Capacity (in³)	Dimensions (in)					Weight (lbs)
				A	B	C	D	E	
0.5	SR05	1.22	0.58	3.54	7.57	0.51	2.05	2.36	4.8
1	SR10	1.09	0.86	3.90	6.57	0.47	2.17	2.20	5.1

Valve Seat Puller

Frac Pump Maintenance

- Pump kit to operate HVSP Series cylinders. Part number: SP12-CSG4
- Pump kit includes: P1201S, CS3814, CH38M, GW4014, and CF3814.

HVSP120

HVSP125

Cylinder Capacity (tons)	Model Number	Center Hole ID (in)	Stroke (in)	Collapsed Height (in)	Weight (lbs)
120	HVSP120	2.13”	0.607	3.63	61.7
125	HVSP125	2.13”	0.607	3.63	54.0

SP5-3814

This combination kit works well with this product. See our combo section for more details.

50 Ton Cylinder w/ Base & Needle Valve

Hydraulic Truck Jack

JU506

- Aluminum Cylinder
- Anodized ram with carry handle
- Shutoff valve
- High/low temp functionality
- CH38F 3/8”-18NPTF high flow female coupler
- 50 Ton @ 9,091 PSI

80%

Safety Practices

Good industry practice recommends not exceeding 80% of maximum rated capacities of all our products.

Cylinder Capacity (tons)	Model Number	Collapsed Height (in)	Extended Height (in)	Stroke (in)	Weight (lbs)
50	JU506	11.6	17.6	6.0	28.0

Hydraulic Bench Vise

5 Ton Holding Force

- Hands free operation with foot pump control
- Air control valve for variable speed and added safety
- Cast steel construction 52,000 PSI tensile strength
- Hydraulic pressure closes jaws, spring return opens jaws

Safety Instructions

Visit our DO’S and DON’TS section to review the best methods of operation. Always be prepared.

pg 92

Model Number	Capacity (tons)	Jaw Width (in)	Jaw Clearance (in)	Jaw Opening (in)
HBV5	5	8.00	3.50	8.00

Hydraulic Gear Pullers

POSILOCK®

- Safety cage design prevents jaws from slipping
- Cylinders are removable for ease of servicing
- Each puller comes with a lift plate and a ram point set

Capacity (tons)	Model Number	Reach (in)	Spread Range (in)	Ram Stroke (in)	Jaw Style
5	HGP053	6”	0.5” - 8”	5”	External
10	HGP103	8”	0.75” - 12”	6.13”	External
15	HGP153	10”	1” - 15”	10”	External
25	HGP253	12”	2.5” - 18”	14”	External
25	HGP253IE	12”	2.5” - 18”	14”	External/Internal
50	HGP503	14”	3” - 25”	13.25”	External
100	HGP1003	50”	7.5” - 70”	10.25”	External

HGP-1

This combination kit will work well with the hydraulic gear pullers. See our combo section for more details.

Mechanical Gear Pullers

2, 5, 7 Tons

- Able to use 2 or 3 jaws
- Reversible ratchet jaws
- Forged, heat treated high quality steel
- Designed for heavy duty industrial environment
- Adjustable jaw width for a wide range of applications for ease of use
- Easily transportable

Capacity (Ton)	Model Number	Maximum Spread (in)	Maximum Reach (in)	Screw Length (in)
2	MGP02	3-1/4”	2-5/8”	4-1/2”
5	MGP05	5”	4”	8-1/4”
7	MGP07	10”	10”	12”

Hydraulic Nut Splitter w/ Case

Compact and Heavy Duty

- Spacers included
- Straight chisel with a 60/40 angle, and works on all type of materials, including stainless steel
- Chisel can be re-sharpened multiple times
- Comes with a padded tool box to hold the head, cylinder, tips and spacers

Capacity (tons)	Model Number	Nut Size Capacity ATF	Stud Dimension	Weight (lbs)
25	HNS105	0.625” - 1.4375”	0.4375” - 0.875”	20.0
25	HNS200	1.1875” - 2.375”	7/16” - 7/8”	21.0
100	HNS308	2.625” - 3.5”	1.75” - 2.25”	95.0

POSILOCK® is a registered trade mark of Posilock Puller Inc.

Safety Instructions

Visit our DO'S and DON'TS section to review the best methods of operation. Always be prepared.

pg 92

SP5-3814

This combination kit works well with the hydraulic nut splitter set. See our combo section for more details.

High-Flow Couplers

High-Flow Coupler: CH38F is included on all models (except where specified).

Maintenance Kits / Bottle Jacks		Page Number / Reference Image
Rail Car Jack		85
Maintenance Kits		85
Lifting Bags	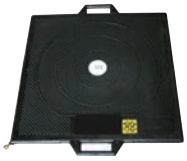	86
Lifting Bag Accessories		87
Manual Bottle Jacks		88
Air/Manual Bottle Jacks		88
Toe Jacks		88
Mini Jacks		89
OMNI Jacks		89
Orbital Jacks		89

Cross Referencing and Engineering | Page 90 ▶

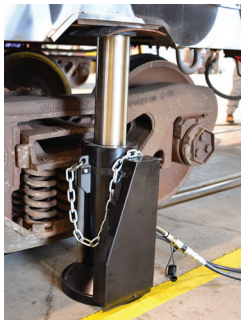

Rail Car Jack, JDR80, lifting the back of a rail car for the operator to start maintenance on the car's wheels.

Rail Car Jack

Double Acting Alum. Cylinder

- High strength aluminum construction suitable for rough working environments.
- Specially designed saddle
- Rod wiper seals out dirt and contamination
- Connect under pressure flush face quick couplers with pressure relief feature for ease of installation and/or removal
- Max. working pressure: 4200 PSI / 290 Bar

JDR80

Jack Sets

JDR8-PE45

- PE45M4N10A - 1 hp Electric Motor Pump
- 2x CS38JDRF - Extend Hoses (20 Feet)
- 2x CS38JDRM - Retract Hoses (20 Feet)
- 2x JDR80 Cylinders

JDR80

PE45M4N10A

JDR8-PG95

- PG95M4N10 - 10.2 hp Gas Engine Pump
- 2x CS38JDRF - Extend Hoses (20 Feet)
- 2x CS38JDRM - Retract Hoses (20 Feet)
- 2x JDR80 Cylinders

JDR80

PG95M4N10

Model Number	Cylinder Capacity (tons)	Max. Pressure (psi)	Stroke (in)	Cylinder Effective Area (in^2)	Oil Capacity (in^3)		Weight (lbs)	Col-lapsed Ht. A (in)	Extend-ed Ht. B (in)	Cylinder Bore Dia. C (in)	Outside Dia. D (in)	Rod Dia. E (in)	Saddle Dia. F (in)
					Extend	Retract							
JDR80	80	4200	16.2	39.44	639.00	331.00	200.0	24.76	40.96	7.09	8.50	4.92	6.00

Maintenance Kits

4, 10, 20 Ton

J50100

J50040

J50200

- Sets are portable for ease of use on the job site
- Custom fitted, rugged blow molded storage case
- 10 ton set has wheels for ease of transport
- Designed for pushing, spreading, pressing, and more

Capacity (tons)	Pump Capacity (psi)	Model Number	Rod			Number of Attachments	Weight (lbs)
			Collapsed Height (in^2)	Extended Height (in^3)	Effective Area (in^2)		
4	8,000	J50040	11.00	15.75	0.998	14	46.0
10	10,000	J50100	13.63	19.75	2.411	13	81.0
20	10,000	J50200	11.77	16.93	5.14	16	206.0

** When extension tubes and/or offset attachments are used, the capacity is reduced.*

Lifting Bags

Aramid Reinforced

A lifting bag raising the axle of this train car for maintenance

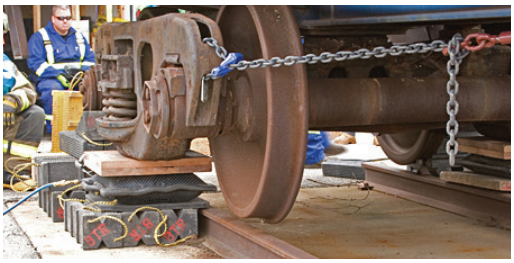

Lifting bags are useful for many different types of applications

- High pressure air lifting bags require only 1” clearance and can lift up to 86 tons
- 3 or 4 layers of Aramid Fiber on both sides of the bag to create a lifting bag unequaled in strength and durability.
- Made in the USA and is ISO 9001/2008 and CE Certified
- Product replacement 3 year unconditional warranty.
- Marked with a distinct “bulls eye with tonnage rating”
- Conical, interlocking surface to limit slippage and aid in stacking.
- Each bag has either molded carry handles and/or tabs/eyelets

Made in the U.S.A.

All lifting bags are made in the USA and meet ISO 9001/2008 and CE certification.

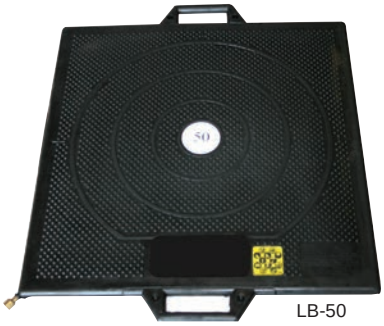

LB-50

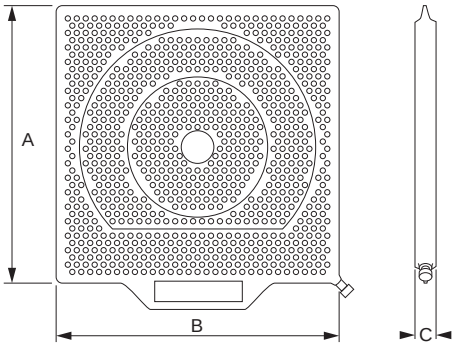

Model Number	Capacity (tons)	Max. Lifting Height (in)	Max Working Pressure (psi)	Reinforcing Material	Handles or Eyelets	Dimensions (in)			Weight (lbs)
						Length A	Width B	Deflated Ht C	
LB-1	1.5	2.5	120	Aramid	2 Eyelets	6.0	6.0	0.75	2.0
LB-3	3.3	3.0	120	Aramid	4 Eyelets	12.0	6.0	0.75	3.0
LB-6	6	4.5	120	Aramid	4 Eyelets	10.0	10.0	1.0	4.0
LB-13	13	7.5	120	Aramid	4 Eyelets	15.0	15.0	1.0	12.0
LB-15	15	7.5	120	Aramid	2 Eyelets	15.0	21.0	1.0	15.0
LB-22	22	9.5	120	Aramid	1 Handle	20.0	20.0	1.0	22.0
LB-32	32	11.0	120	Aramid	1 Handle	21.0	25.0	1.0	28.0
LB-37	37	9.0	120	Aramid	2 Handles	40.0	105.0	1.0	34.0
LB-50	50	15.0	120	Aramid	2 Handles	29.0	29.0	1.0	45.0
LB-70	70	18.0	120	Aramid	2 Handles	34.0	34.0	1.0	65.0
LB-86	86	24.0	120	Steel	4 Handles	42.0	42.0	1.0	118.0

Lifting Bag Accessories

Aramid Reinforced

Reference Image	Model Number	Description
	LB-ACVC	Air-Cock Shut-off Valve W/Safety Coupler
	LB-AT80CF	80 cu ft Air Tank, 3,000psi
	LB-AR1	Air Bottle Regulator w/safety coupler
	LB-DDC	Dual Deadman Control w/safety coupler
	LB-SDC	Single Deadman Control w/safety coupler
	LB-RH10C	10 ft Green Regulator Hose w/Safety Couplers
	LB-H16YC	20 ft Yellow High Pressure Hose w/safety coupler
	LB-H32YC	32 ft Yellow High Pressure Hose w/safety coupler
	LB-H16BC	20 ft Blue High Pressure Hose w/safety coupler
	LB-H32BC	32 ft Blue High Pressure Hose w/safety coupler
	LB-H16RC	20 ft Red High Pressure Hose w/safety coupler
	LB-H32RC	32 ft Red High Pressure Hose w/safety coupler
	LB-MCP4	Master Control Pkg #4
	LB-MCP3	Master Control Pkg #3

Manual Bottle Jacks

12-50 Ton

- Hydraulic system is protected from internal damage by a patented by-pass mechanism (U.S. Patent No.5,946,912)
- Machined and polished cylinders with die-cut threads provide non-abrasive leak-free performance
- Fabricated from hard-cast steel with heat-treated critical stress areas
- Unique cross-type forged release valve assures positive load control
- A wide, rugged base provides stability and strength

Capacity (ton)	Model Number	Min. Height (in)	Max. Height (in)	Hydraulic Lifting (in)	Extension Screw (in)	Base Size (in)		Weight (lbs)
						Length	Width	
12	J10125	9.5	18.6	6.0	3.1	5.3	5.1	17.5
12	J10129	6.0	10.6	3.0	1.6	5.3	5.1	14.9
20	J10205	9.5	18.6	6.0	3.1	6.3	5.9	27.5
20	J10209	6.5	11.3	3.1	1.6	6.3	5.9	21.8
30	J10300	11.0	18.0	7.0	-	8.1	6.9	53.5
50	J10500	9.5	13.9	4.4	-	10.9	7.4	103.5

Air/Manual Bottle Jacks

12-100 Ton

- Air operation reduces operator fatigue and increases speed
- A compact/powerful air turbo motor (U.S. Patent No. 5,341,723) is equipped to raise the load to the desired height efficiently, effortlessly, and safely
- Hydraulic system is protected from internal damage by a patented by-pass mechanism (U.S. Patent No.5,946,912)
- Versatile "Quick Connector" design provides easy removal of the air hose from the air motor, allowing compact storage or remote operation

Capacity (ton)	Model Number	Min. Height (in)	Max. Height (in)	Hydraulic Lifting (in)	Extension Screw (in)	Base Size Length (in)	Base Size Width (in)	Input Air Pressure Range (psi)	Weight (lbs)
12	J18124	9.5	18.5	5.5	3.5	7.6	6.5	110-175	28.6
20	J18204	9.8	18.8	5.1	3.9	8.3	7.3	110-175	37.4
30	J18302	11.0	18.0	7.0	-	10.3	8.3	110-175	60.5
50	J18502	12.0	19.0	7.0	-	10.9	7.4	110-175	128.5
100	J18992*	12.0	18.1	6.1	-	12.6	9.4	110-175	205.9

**Air Operated Only*

Toe Jacks

Low Height

- Heat treated and chrome plated medium-carbon steel cylinder
- Chrome plated rod promotes longer seal life and optimum performance
- U.S. Patented by-pass device protects hydraulic system from over travel damage
- Hydraulic system is protected from internal damage by a patented by-pass mechanism (U.S. Patent No.5,946,912)

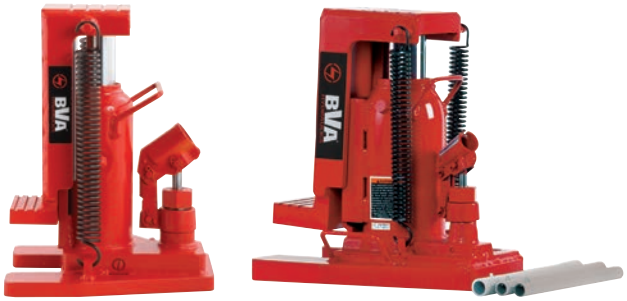

Capacity (tons)	Model Number	Toe Saddle		Head Saddle		Hydraulic Lifting (in)	Base Size (L x W) (in)	Weight (lbs)
		Min. Height (in)	Max. Height (in)	Min. Height (in)	Max. Height (in)			
3	J13060	0.6	5.8	9.0	14.1	5.1	6.0 x 4.4	36.1
6	J13120	0.9	6.0	10.5	15.6	5.1	11.0 x 7.5	55.0
10	J13200	1.1	6.3	11.0	16.1	5.1	11.6 x 9.0	84.0
15	J13300	1.1	6.6	13.1	18.6	5.5	12.5 x 10.8	116.6

Mini Jacks

Compact

- Low profile mini jack
- Compact and lightweight
- Convenient for storage

▲ *These mini jacks are lightweight and will fit in the palm of your hand. We see here a J11050 Mini Jack.*

Capacity (tons)	Model Number	Minimum Height (in)	Maximum Height (in)	Hydraulic Lifting (in)	Base Size (L x W) (in)	Weight (lbs)
5	J11050	2.8	3.1	0.8	4.1 x 4.0	4.6
5	J11055	3.8	4.9	1.5	4.1 x 4.0	5.3
10	J11100	4.8	6.3	1.6	4.9 x 4.4	12.5
20	J11200	5.1	6.8	1.6	5.4 x 4.8	16.7

OMNI Jacks

Multi-Position Jack

- A wide, rugged base provides stability and strength while operating in a vertical or horizontal position
- Hydraulic lift is protected from internal damage by a by-pass mechanism U.S. Patent No. 5,946,912
- Machined and polished cylinders with die-cut threads provide non-abrasive leak-free, durable performance
- Fabricated from hard-cast steel with heat-treated critical stress areas

Capacity (tons)	Model Number	Minimum Height (in)	Maximum Height (in)	Hydraulic Lifting (in)	Extension Screw (in)	Base Size (L x W) (in)	Weight (lbs)
12	J16123	9.5	18.6	6.0	3.1	5.3 x 5.1	18.0
20	J16203	9.5	18.6	6.0	3.1	6.3 x 5.9	28.0

Orbital Jacks

Rotating Handle

- Serrated, heat-treated saddle provides generous lifting area and secure grip
- Heat-treated extension screw allows low pick-up height adjustment and maximum lift height
- U.S. Patented built-in by-pass device protects hydraulic system from over-pumping damage

Capacity	Model Number	Min Height (in)	Max Height (in)	Hydraulic Lifting (in)	Extension Screw (in)	Base Size (in)	Weight (lbs)
12	J10124	9.5	18.6	6.0	3.1	7.5 x 4.6	19.6
	J10126	6.1	10.6	3.0	1.5	7.5 x 4.6	16.5
20	J10204	9.6	18.8	5.1	4.0	7.5 x 5.4	29.3
	J10206	6.5	11.3	2.8	2.0	7.5 x 5.4	22.2

BVA Cross Reference Chart*

Compatibility Check

Ton	BVA	Enerpac	Power Team	Simplex
Single Acting Cylinders				
5	**H0500**	RC-50	-	R50
	H0501	RC-51	C51C	R51
	H0503	RC-53	C53C	R53
	H0505	RC-55	C55C	R55
	H0507	RC-57	C57C	R57
	H0509	RC-59	C59C	R59
10	**H1001**	RC-101	C101C	R101
	H1002	RC-102	C102C	R102
	H1004	RC-104	C104C	R104
	H1006	RC-106	C106C	R106
	H1008	RC-108	C108C	R108
	H1010	RC-1010	C1010C	R1010
	H1012	RC-1012	C1012C	R1012
	H1014	RC-1014	C1014C	R1014
15	**H1501**	RC-151	C151C	-
	H1502	RC-152	C152C	R152
	H1504	RC-154	C154C	R154
	H1506	RC-156	C156C	R156
	H1508	RC-158	C158C	-
	H1510	RC-1510	C1510C	R1510
	H1512	RC-1512	C1512C	-
	H1514	RC-1514	C1514C	R1514
25	**H2501**	RC-251	C251C	R251
	H2502	RC-252	C252C	R252
	H2504	RC-254	C254C	R254
	H2506	RC-256	C256C	R256
	H2508	RC-258	C258C	R258
	H2510	RC-2510	C2510C	R2510
	H2512	RC-2512	C2512C	R2512
	H2514	RC-2514	C2514C	R2514
30	**H3008**	RC-308	-	R308

Ton	BVA	Enerpac	Power Team	Simplex
55	**H5502**	RC-502	C552C	R552
	H5504	RC-504	C554C	R554
	H5506	RC-506	C556C	R556
	H5513	RC-5013	C5513C	R5513
75	**H7506**	RC-756	C756C	R756
	H7513	RC-7513	C7513C	R7513
100	**H10006**	RC-1006	C1006C	R1006
	H10010	RC-10010	C10010C	R10010
Threaded Cylinders				
10	**HT1006**	-	C106CBT	-
	HT1010	-	C1010CBT	-
Aluminum Cylinders				
20	**HU2002T**	RAC-202	RA202	-
	HU2004T	RAC-204	RA204	-
	HU2006T	RAC-206	RA206	-
30	**HU3002**	RAC-302	RA302	-
	HU3004	RAC-304	RA304	-
	HU3006	RAC-306	RA306	RAS306B
50	**HU5002**	RAC-502	RA552	RAS502A
	HU5004	RAC-504	RA554	-
	HU5006	RAC-506	RA556	RAS508A
	HU5010	RAC-5010	RA5510	-
75	**HU7504**	-	-	-
	HU7506	-	-	-
700	**HU10002**	RAC-1002	RA1002	RAS1002A
	HU10006	RAC-1006	RA1006	RAS1008A
	HU10010	RAC-10010	-	-
Low Profile Cylinders				
10	**HL1001**	RCS-101	RSS101	RLS101
20	**HL2002**	RCS-201	RSS202	RLS201
30	**HL3002**	RCS-302	RSS302	RLS302
50	**HL5002**	RCS-502	RSS502	RLS502
100	**HL10002**	RCS-1002	RSS1002	RLS1002
Flat Body Cylinders				
5	**HF0503**	RSM-50	RLS50	-
	HF0503B kit	-	-	-
10	**HF1005**	RSM-100	RLS100	RFS10
	HF1005B kit	-	-	-

BVA ® is a registered trademark of SF Companies.
Enerpac® is a registered trademark of the Actuant Corporation.
Power Team® is a registered trademark of SPX Corporation.
Simplex® is registered of the Actuant Corporation.

BVA Cross Reference Chart*

Compatibility Check

Ton	BVA	Enerpac	Power Team	Simplex
20	**HF2005**	RSM-200	RLS200	RFS20
	HF2005B kit	-	-	-
30	**HF3005**	RSM-300	RLS300	RFS30
	HF3005B kit	-	-	-
50	**HF5006B**	RSM-500	RLS500S	RFS50
75	**HF7506**	RSM-750	RLS750S	RFS75
100	**HF10006**	RSM-1000	RLS1000S	RFS100
150	**HF15006**	RSM-1500	RLS1500S	RFS150
Pull Cylinders				
2	**HP0205**	BRC-25	RP25	RP25
5	**HP0505**	BRC-46	RP55	RP55
10	**HP1006**	BRC-106	-	-
Hollow Hole Cylinders				
12	**HC1201T**	RCH-120	RH120	RC120
	HC1202T	RCH-121	RH121	RC121
	HC1202XT	RCH-1211	RH121T	RC1211
	HC1203XT	RCH-123	RH123	RC123
20	**HC2002T**	RCH-202	RH202	RC202
	HC2006T	RCH-206	RH206	RC206
30	**HC3002T**	RCH-302	RH302	RC302
	HC3006T	RCH-306	RH306	RC306
60	**HC6003T**	RCH-603	RH603	RC603
	HC6006T	RCH-606	RH606	RC606
100	**HC10003T**	RCH-1003	RH1003	RC1003
Lock Nut Cylinders				
55	**HLN5502**	CLL-502	R552L	RLN502
	HLN5504	CLL-504	-	-
	HLN5506	CLL-506	R556L	RLN506
	HLN5508	CLL-508	-	-
	HLN5510	CLL-5010	R5510L	RLN5010
	HLN5512	CLL-5012	-	-
100	**HLN10002**	CLL-1002	R1002L	RLN1002
	HLN10004	CLL-1004	-	-
	HLN10006	CLL-1006	R1006L	RLN1006
	HLN10008	CLL-1008	-	-
	HLN10010	CLL-10010	R10010L	RLN10010
	HLN10012	CLL-10012	-	-

Ton	BVA	Enerpac	Power Team	Simplex
10	**HD1010**	RR-1010	RD1010	RDA1010
	HD1012	RR-1012	-	-
30	**HD3008**	RR-308	-	RDA308
	HD3014	RR-3014	RD2514	RDA3014
55	**HD5506**	RR-506	RD556	RDA556
	HD5513	RR-5013	RD5513	RDA5512
	HD5520	RR-5020	RD5518	RDA5523
75	**HD7506**	RR-756	-	-
	HD7513	RR-7513	-	-
100	**HD10006**	RR-1006	RD1006	RDA1006
	HD10013	RR-10013	RD10013	RDA10012

BVA	Enerpac	Power Team	Simplex
Hand Pumps			
P601S	P-39	P12	P41
P1201S	P-391	P55	-
P350	P-142	-	-
P1000	P-392	P59	P60
P2001	P-80	P157	P82
P2301	P-80	P159	P140
P4301	P-801	P157	P230
P8701	P-462	P460	P461
P2301M	P-84	P157D	P230D
P8701M	P-464	P460D	P461D
P240L	P-18	-	-
Air Pumps			
PA600	PA-133	PA9	-
PA600H	-	PA9H	-
PA1500	-	PA6	GA90
PA1500L	PARG-1102N	PA6R	GA90R
PA1500M	-	PA6DM	-
PA2000	PATG-1102N	-	-
PA3801	PATG-1105N	PA6-1	GA9230
PA3801L	-	-	GA9230R
PAR1703	-	PA174	-
PAR4003	ZA4310MX	PA462	G5733
PARD1701	-	PA172	-
PARD1703	-	PA174	-

*For comparison purposes only. Products are not identical. To view complete cross over list go to *www.BVAhydraulics.com*

Safety Instructions

Industry Safety Standards

Safety Instructions

- Read and understand all printed materials provided with and on this cylinder
- Do not exceed rated capacities
- Use only on hard level surface capable of sustaining the load
- Do not connect actuators to pumps with higher pressure ratings
- Always inspect hoses and connections for damage prior to use
- Keep hands and feet clear of work area
- LIFTING DEVICE ONLY! Immediately after lifting, support the load with appropriate means
- Use only manufacturer approved hydraulic fluid
- A flow-restricting component shall not be present between the relief valve and the tank
- No alterations shall be made to this cylinder
- Failure to heed these markings may result in injury and/or property damage
- Each double-acting cylinder shall be fitted with a relief valve on the retract circuit, which bleeds off the smaller effective area of the cylinder

General

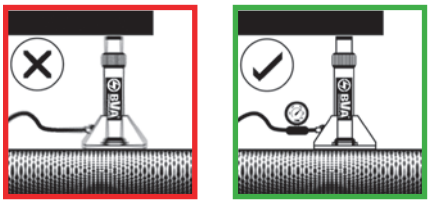

Do not override the factory setting of relief valves. Always use a gauge to check system pressure.

Cylinders

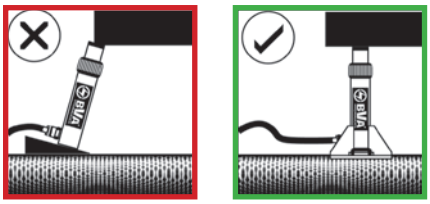

Provide a solid support for the entire cylinder base area. Use cylinder base attachment for more stability.

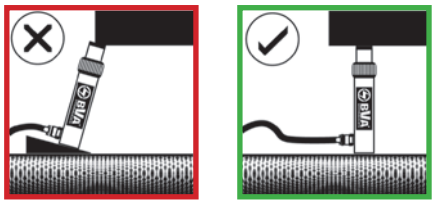

The entire cylinder saddle must be in contact with the load. Movement of the cylinder must be parallel with the movement of the load.

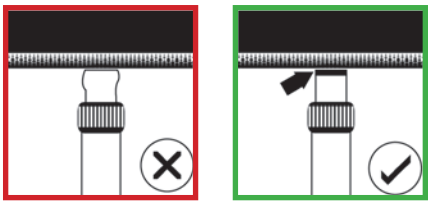

Do not use cylinder without saddle. This will cause rod to “mushroom” Saddles distribute load evenly on the rod.

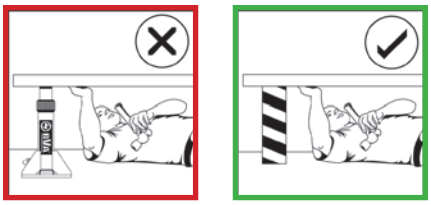

As with jacks, never place any part of your body under the load. Load must be on cribbing before venturing under.

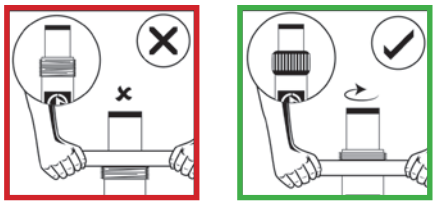

Always protect cylinder threads for use with attachments.

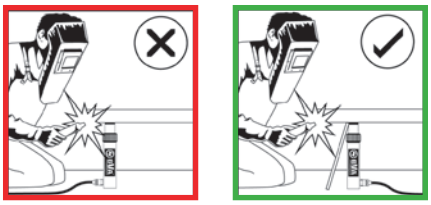

Keep hydraulic equipment away from open fire and temperatures above 150°F (65°C).

Jacks

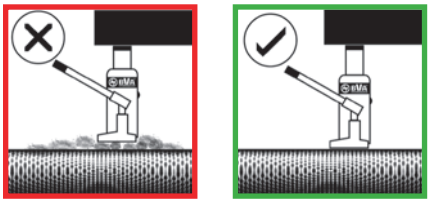

Provide a level and solid support for the entire jack base area.

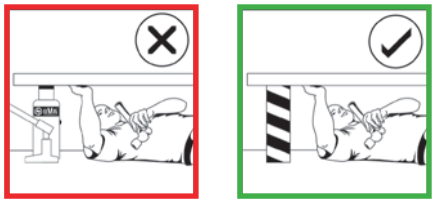

Never place any part of your body under the load. Ensure the load is solidly supported before venturing under.

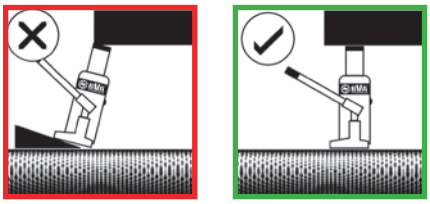

The entire jack saddle must be in contact with load. Movement of the load must be in the same direction as jack rod.

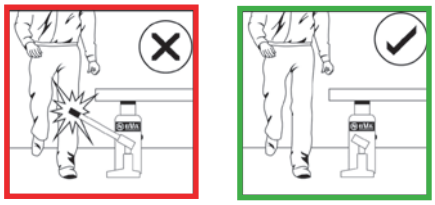

Remove the jack handle when not in use.

80% Rule

Good industry practice recommends not exceeding 80% of maximum rated capacities.

- Use only on hard, level surfaces capable of sustaining the load.
- Immediately after lifting, support the load with appropriate means
- Failure to heed these warnings may result in personal injury as well as property damage.

Hydraulic Pump Safety Instructions

- *READ AND UNDERSTAND ALL WARNINGS, INSTRUCTIONS AND OWNER'S MANUAL INFORMATION BEFORE ATTEMPTING TO USE THIS EQUIPMENT*
- Burst hazard exists if hose or connection pressure exceeds rated pressure.
- Do not exceed the rated capacity of this device. Monitor pressure and load at all times.
- Verify load with calibrated load cell and indicator, accurate pressure gauge or equivalent devices.
- Inspect hoses and connections for damage prior to use. Never attempt to grasp a leaking pressurized hose.
- Release the hydraulic pressure before disconnecting hoses or couplers, and before servicing the pump or accessory.
- Immediately after lifting, support the load with appropriate means. Never rely on hydraulic pressure to support a load.
- Wear protective clothing and eye protection that meets ANSI Z87.1 and OSHA standards when operating this equipment.
- Ensure that the chosen application is stable to work on and around.
- Do not subject the pump and its components to shock loads.
- Do not connect to application which can return more oil to the reservoir than the pump reservoir can hold.
- Ensure that the rated pressure of all applications and fittings be equal to or greater than the rated pressure of this pump.
- Keep hydraulic equipment away from flames and heat.
- No alterations shall be made to this device.
- Failure to heed these warnings may result in personal injury as well as property damage.

Pumps

Do not use handle extender. Hand pumps should be easy to operate when used correctly.

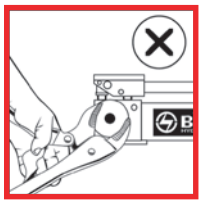

Close release valve finger tight. Using force will damage the valve.

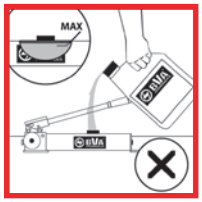

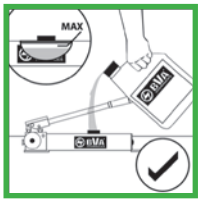

Fill pump only to recommended level. Fill only when connected cylinder is fully retracted.

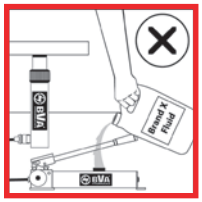

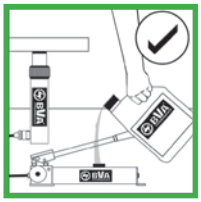

Use only genuine BVA hydraulic oil. The wrong fluid can destroy your seals and pump and will render your warranty null and void.

Electric Pump Safety Instructions

TO AVOID ELECTROCUTION HAZARD:

- Owner/Operator must read, understand and follow all printed material provided with this device before use.
- Connect ONLY to properly grounded electrical source. Connect to GFI outlet ONLY! For use in dry locations.
- Avoid the use of extension cords. If used, extension cord lengths up to 25 ft shall be SJT-14X3 or heavier. For cords up to 50 ft, use SJT-12X3 or heavier.
- For extension cord lengths up to 100 ft, use SJT-10X3 or heavier. NEVER use a 3 prong adapter.
- Do not operate this device in an explosive atmosphere or in the presence of conductive liquids.

Hoses and Couplers

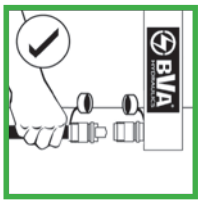

Clean both coupler parts before connecting. Use dust caps when coupler parts are not connected.

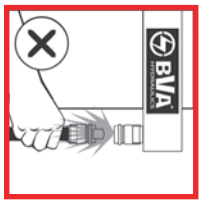

Detach cylinder only when fully retracted or use shut-off valves or safety valves to lock-in cylinder pressure.

Don't lift hydraulic equipment by the hoses.

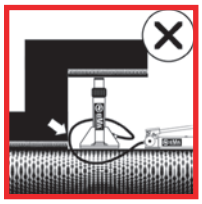
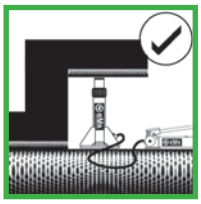

Keep hoses away from the area beneath loads.

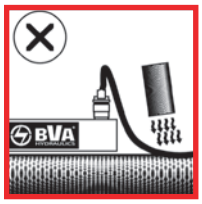
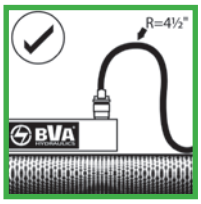

Do not kink hoses. Bending radius should be at least 4½". Do not drive over or drop heavy objects on the hoses.

Maintaining Your Equipment

Ensure a longer life span of your equipment

Hydraulic Fluids

- Use only ISO 46 BVA Hydraulic Oil P/N's; F01 (1 gal) or F55 (55 gal) for pumps and cylinders.
- Viscosity @ 100 deg F 234 (S.U.S.); Viscosity @210 deg F=53 (S.U.S.); ASTM Grade 215; Flash Point 356 deg F; Pour Point -49 deg F, API Gravity =30.8.

Air Line Lubricants

- Use Class 1 Turbine Oil (ISO VG32) for Air Line Lubricant

Hydraulic and Pneumatic Filtration

- Hydraulic fluid must be kept clean, cool and free of water.
- Use Hydraulic Filtration to provide fluid which meets ISO 17/15/12 cleanliness levels.
- Air Line Filtration for solid particulate contamination removal: Use BVA P/N; FRL-145, 5uM Pneumatic Filter.
- Air Line Water Removal; Use BVA P/N; AD-145, Ambient Dryer.

Proper Operation of Equipment

- Refer to individual Product Owner's Manuals and BVA Catalogs for; general information, specifications, safety, set up, operation, maintenance, trouble shooting, storage and warnings for all BVA products.

Formulas

Key to Measurements			
Weight:		**Length**	
1 pound (lb.)	=0.4536 kg	1 in	=25.4 mm
1 kg	=2.205 lbs	1 mm	=0.039 in
1 ton (short, US)	=2,000 lbs	1 in²	=6.452 cm²
1 ton (metric)	=2,205 lbs	1 cm²	=0.155 in²
Volume:		**Pressure:**	
1 in³	=16.387 cm³	1 psi (lb/in²)	=0.69 bar
1 cm³	=0.061 in³	1 bar	=14.5 psi
1 liter	=61.02 in³	1 kPa	=0.145 psi
	=0.264 gal(US)		
1 gal (US, liquid)	=3.785 liter	**Temperature:**	
	=231 in³	0°F	=(0°C x 1.8) + 32
	=3,785 cm³	0°C	=(0°F - 32) ÷ 1.8

Cylinder Rod Speed

Formula → $V = \frac{A}{Q} \times 60$

$$\text{Cylinder Rod Speed (sec/in)} = \frac{\text{Cylinder Effective Area (in}^2\text{)}}{\text{Pump Flow Rate (in}^3\text{/min)}} \times \frac{60\text{ (sec)}}{1}$$

Force

Formula → $F = P \times A$

Force (lbs) = Hydraulic Working Pressure (lb/in²) × Cylinder Effective Area (in²)

Cylinder Oil Capacity

Formula → $C = A \times L$

Oil Capacity (in³) = Cylinder Effective Area (in²) × Cylinder Stroke (in)

¼" Hose Oil Capacity

Formula → $C = 0.5892 \times H$

Oil Capacity (in³) = 0.5892 × Length of Hose (ft)

⅜" Hose Oil Capacity

Formula → $C = 1.3608 \times H$

Oil Capacity (in³) = 1.3608 × Length of Hose (ft)

Cylinder Effective Area

Formula → $A = \pi \times \frac{D^2}{4}$

$$\text{Cylinder Effective Area} = \pi \times \frac{(\text{Cylinder Bore Diameter})^2}{4}$$

$\pi = 3.14159265359$

Model Number Index

Cylinders

H	6	HUD	16	HL	26	HULN	32	HC	36	HP	41
HU	10	HG	18	HF	28	HLNF	33	HDC	38	HT	42
HD	12	HDG	22	HLN	30	Accessories	34	HUC/HUDC	40	HPD	43

Pumps

P	Single Acting Hand Pumps	46	PAR	Rotary Air Pumps	49	PA	Double Acting Air Pumps	50	PG	Gas Engine Pumps	60
P	Double Acting Hand Pumps	46	PA	All Position Air Pumps	50	PE	1-Phase Electric Pumps	52	PD	Diesel Engine Pumps	60
P57	Foot Pumps	48	PA	Single Acting Air Pumps	50	PE	3-Phase Electric Pumps	56	PU	Universal Motor Pumps	63

Combo Kits

H	General Purpose Cylinder Combinations	64	HL	Low Profile Cylinder Combinations	65
HF	Flat Body Cylinder Combinations	64	HLN	Lock Nut Cylinder Combinations	65
HC	Hollow Hole Cylinder Combinations	65	HU	Aluminum Cylinder Combinations	65

Control Valves & Accessories

Flow Control Valves	66	Gauge Adapters	69	Solenoid Valves	70	Wireless Controller	71	Pressure Switch	72	Directional Control Valves	74
Manifolds	68	Hydraulic Oil	70	Hydraulic Couplers	71	External Pressure Adj	71	Hydraulic Hoses	72	Fittings	75
Pressure Gauges	69	Coupler Dust Cover	70	Foot Pedals	71	Manifold Blocks	72	Pump Mounted Valves	73		

Presses/Tools

Movable Head Shop Presses	77	Shop Press Guards	80	Oil Field Valve Seat Pullers	82	Hydraulic Gear Pullers	83
Fixed Head Shop Presses	78	Flange Spreaders	81	Aluminum Cylinder w/ Base/Needle Valve	82	Mechanical Gear Pullers	83
Shop Press Accessories	80	Duck Bill Spreaders	81	Hydraulic Bench Vise	82	Nut Splitters	83

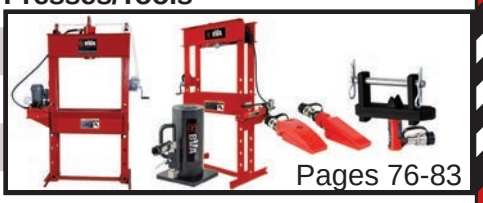

Maintenance Kits/Bottle Jacks

Maintenance Kits/Rail Cylinders	85	Manual Bottle Jacks	88	Mini Jacks	89
Lifting Bags	86	Air/Manual Bottle Jacks	88	OMNI All-Position Jacks	89
Lifting Bag Accessories	87	Toe Jacks	88	Orbital Jacks	89

Cross-Reference & Engineering

BVA Cross Reference Chart	90	Maintaining Your Equipment	94
Hydralic Formula Reference	91	Maintaining Your Equipment	94
Safety Instructions	92		

© Copyright 2016 SFA Companies
All rights reserved. Any copying or other use of the material in this catalog (text, illustrations, drawings, photos) without prior express written consent is prohibited. Information in this catalog is subject to change without prior notice.

Cylinders

Pages 6-43

Pumps

Pages 44-63

Combo Kits

Pages 64-65

Control Valves & Accessories

Pages 66-75

Presses/Tools

Pages 76-83

Maintenance Kits/Bottle Jacks

Pages 84-89

Cross-Reference & Engineering

Pages 90-94

Catalog Download

Scan this QR code with your phone to download our catalog

OR

Visit our website
www.BVAhydraulics.com

Contact Information

United States of America

Shinn Fu Company of America

Address: 10939 N. Pomona Ave.
Kansas City, MO 64153
Tel: 888-332-6419
816-891-6390
Fax: 816-448-2142
Email: sales@bvahydraulics.com

Global Locations

Canada

Shinn Fu Company of Canada

Address: 6355 Shawson Dr.
Unit 1 Mississauga,
Ontario L5T 1S7 Canada
Tel: 1-905-362-2277
Fax: 1-905-362-2280
Email: sales@shinnfucanada.ca

Europe

Shinn Fu Company of Europe

Address: Tussenrimer 20, 4704 SR
Roosendaal, The Netherlands
Tel: 31-165-583-300
Fax: 31-165-583-310
Email: sales@sfeu.nl

Australia

Shinn Fu Company of Australia

Address: 15 Viewtech Place
Rowville, Victoria
3178, Australia
Tel: 61-3-9755-8277
Fax: 61-3-9755-8219
Email: sales@bvaonline.com.au

Taiwan

Shinn Fu Corporation Headquarters

Address: 7F., No.408 Ruei Gaung Rd
Nei Hu Disctrict Taipei City
114 Tiawan R.O.C
Tel: 886-2-8751-7888
Fax: 886-2-8741-7999
Email: sales@shinnfu.com

BVA is a division of
SFA Companies